Office de la Propriété Intellectuelle du Canada
Un organisme d'Industrie Canada

Canadian Intellectual Property Office
An agency of Industry Canada

CA 2671062 A1 2008/06/05

(21) 2 671 062

(12) DEMANDE DE BREVET CANADIEN
CANADIAN PATENT APPLICATION

(13) A1

(86) Date de dépôt PCT/PCT Filing Date: 2007/11/29
(87) Date publication PCT/PCT Publication Date: 2008/06/05
(85) Entrée phase nationale/National Entry: 2009/05/29
(86) N° demande PCT/PCT Application No.: EP 2007/010731
(87) N° publication PCT/PCT Publication No.: 2008/064920
(30) Priorité/Priority: 2006/11/29 (EP06024708.7)

(51) Cl.Int./Int.Cl. *B65D 83/38* (2006.01),
B65D 79/00 (2006.01)

(71) Demandeur/Applicant:
IMPRESS GROUP B.V., NL

(72) Inventeur/Inventor:
NIEC, PHILIPPE GERARD STANISLAS, FR

(74) Agent: FETHERSTONHAUGH & CO.

(54) Titre : BOITE SOUS PRESSION, TELLE QU'UNE BOITE D'AEROSOL
(54) Title: PRESSURIZED CAN, SUCH AS AN AEROSOL CAN

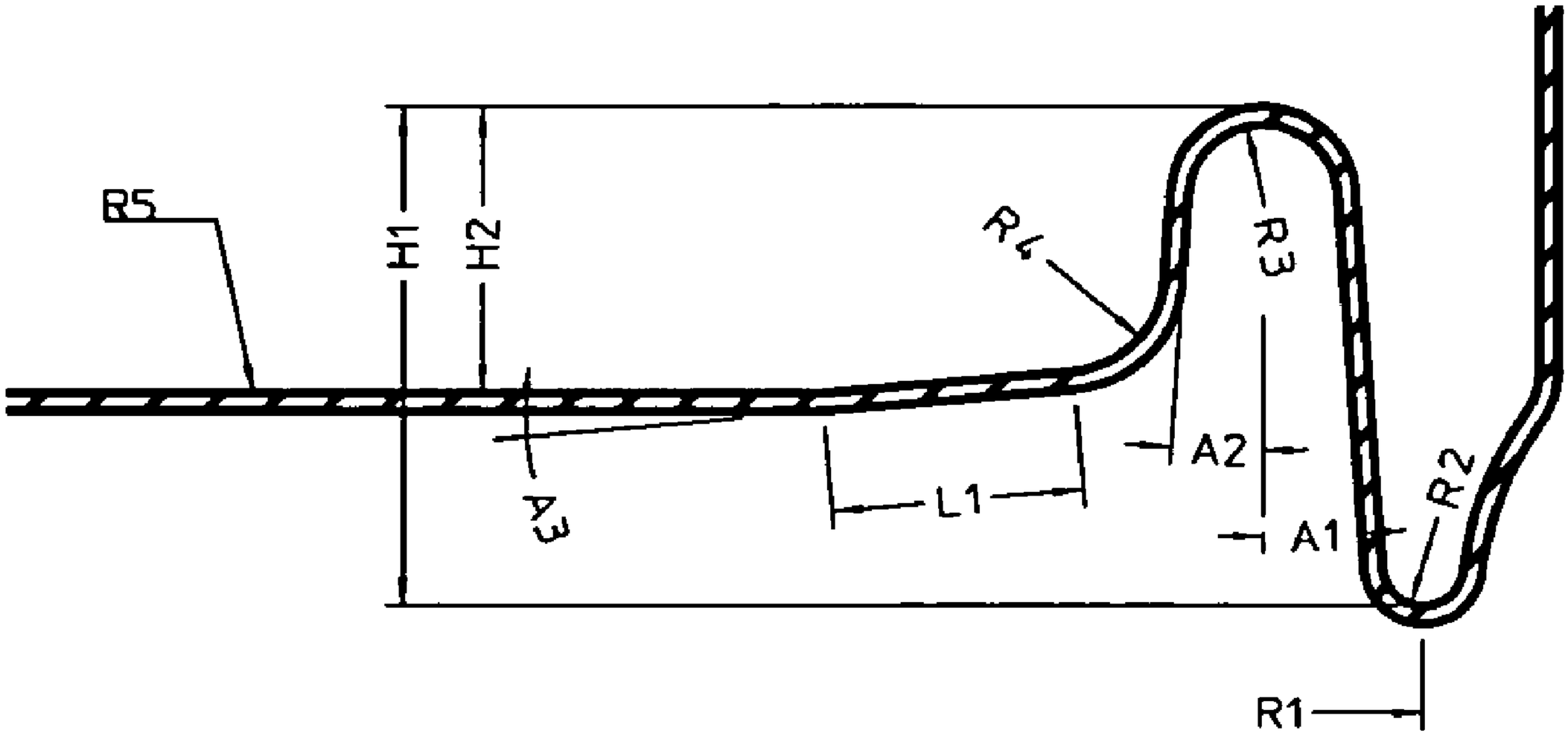

(57) Abrégé/Abstract:
The invention relates to a pressurized can, such as an aerosol can, having a bottom comprising a panel connected via a countersink and a foot to the can body wall, which bottom has a panel with a substantially non-concave form.

(12) INTERNATIONAL APPLICATION PUBLISHED UNDER THE PATENT COOPERATION TREATY (PCT)

(19) World Intellectual Property Organization
International Bureau

(43) International Publication Date
5 June 2008 (05.06.2008)

PCT

(10) International Publication Number
WO 2008/064920 A1

(51) International Patent Classification:
B65D 83/38 (2006.01) *B65D 79/00* (2006.01)

(21) International Application Number:
PCT/EP2007/010731

(22) International Filing Date:
29 November 2007 (29.11.2007)

(25) Filing Language: English

(26) Publication Language: English

(30) Priority Data:
06024708.7 29 November 2006 (29.11.2006) EP

(71) Applicant *(for all designated States except US)*: **IMPRESS GROUP B.V.** [NL/NL]; Zutphenseweg 51051, NL-7418 AH Deventer (NL).

(72) Inventor; and
(75) Inventor/Applicant *(for US only)*: **NIEC, Philippe, Gérard, Stanislas** [FR/FR]; 11, avenue Joël Le Theule, F-72300 Sablé-sur-Sarthe (FR).

(74) Agent: **PRINS, Hendrik, Willem**; Arnold & Siedsma, Sweelinckplein 1, NL-2517 GK The Hague (NL).

(81) Designated States *(unless otherwise indicated, for every kind of national protection available)*: AE, AG, AL, AM, AT, AU, AZ, BA, BB, BG, BH, BR, BW, BY, BZ, CA, CH, CN, CO, CR, CU, CZ, DE, DK, DM, DO, DZ, EC, EE, EG, ES, FI, GB, GD, GE, GH, GM, GT, HN, HR, HU, ID, IL, IN, IS, JP, KE, KG, KM, KN, KP, KR, KZ, LA, LC, LK, LR, LS, LT, LU, LY, MA, MD, ME, MG, MK, MN, MW, MX, MY, MZ, NA, NG, NI, NO, NZ, OM, PG, PH, PL, PT, RO, RS, RU, SC, SD, SE, SG, SK, SL, SM, SV, SY, TJ, TM, TN, TR, TT, TZ, UA, UG, US, UZ, VC, VN, ZA, ZM, ZW.

(84) Designated States *(unless otherwise indicated, for every kind of regional protection available)*: ARIPO (BW, GH, GM, KE, LS, MW, MZ, NA, SD, SL, SZ, TZ, UG, ZM, ZW), Eurasian (AM, AZ, BY, KG, KZ, MD, RU, TJ, TM), European (AT, BE, BG, CH, CY, CZ, DE, DK, EE, ES, FI, FR, GB, GR, HU, IE, IS, IT, LT, LU, LV, MC, MT, NL, PL, PT, RO, SE, SI, SK, TR), OAPI (BF, BJ, CF, CG, CI, CM, GA, GN, GQ, GW, ML, MR, NE, SN, TD, TG).

Published:
— *with international search report*

(54) Title: PRESSURIZED CAN, SUCH AS AN AEROSOL CAN

(57) Abstract: The invention relates to a pressurized can, such as an aerosol can, having a bottom comprising a panel connected via a countersink and a foot to the can body wall, which bottom has a panel with a substantially non-concave form.

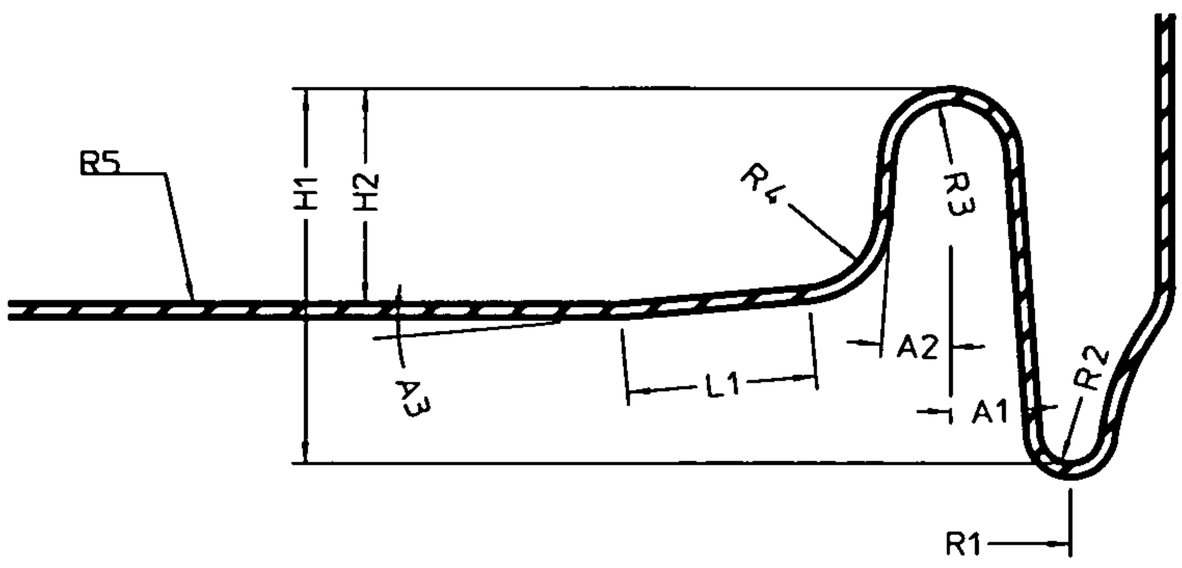

WO 2008/064920 A1

PRESSURIZED CAN, SUCH AS AN AEROSOL CAN

The present invention relates to a pressurized can, such as an aerosol can.

A pressurized can is generally made of one piece and comprises a bottom, a can body wall and an open end for filling and emptying. Pressure is used for emptying the content, such as liquid, gas, foam, paste and the like. The pressurized can has a bottom which comprises a central panel connected via a countersink and a foot to the can body wall.

Known pressurized cans, such as aerosol cans are characterized by the presence of a central panel which has a concave shape.

It is an object of the present invention to provide a pressurized can which is provided with a bottom that can withstand internal pressure and still has a bottom wall thickness which is thinner than conventional pressurized cans, while still providing volume expansion.

Generally pressurized cans have a diameter in the range of about 20-80mm, preferably within the range of 30-70mm. Exemplified are diameters of 30mm, 45mm and 60mm.

It is an object of the present invention to provide a pressurized can which is designed for high pressure resistance (such as up to 15bar, preferably up to 18bar) and still has a minimum thickness in the range of for instance 0.2-0.7mm, generally within the range of 0.3-0.6mm dependent on the diameter of the can. Such a pressurized can is in particular suitable for use as an aerosol can. The can according to the invention should have a pressure behaviour which combines the ability to withstand pressures without permanent deformation, and elastic deformability to a given volume. Up to a particular pressure the bottom may deflect to a certain extent and ultimately will form buckles. In relation to the elastic deformability it is according to the invention that up to about 15bars deformations should not be visible. However, the pressurized can should be deformable up to a given volume under pressure. Accordingly, it is possible to have an indication of the presence of pressure (and the absence of pressure leak).

Accordingly, it is possible with a can according to the invention that the significant elastic deformation against pressure allows inspection of the cans during different stages of handling, such as closure processing and storage. Such outward inspection may be carried out with

classical detector systems measuring particular distances to a sensor, such as a proximity sensor, laser sensor, induction sensor and ultrasonic sensor. This provides the opportunity to inspect the cans for too low or too high internal pressures. For instance at closure for monitoring the pressurization process and/or after processing the cans for detection of pressure loss due to leakage or pressurizing due to chemical reactions.

A can according to the invention should have an optimal axial load resistance. Such axial load resistance provide a narrow footing with an increase of the vertical load. Accordingly, there is less deformability against axial load.

The afore mentioned objectives, needs and advantages are obtained with a pressurized can according to the invention having a bottom comprising a panel connected via a countersink and a foot to the can body wall, which bottom has a panel with a substantially non-concave form.

More specific the pressurized can, such as an aerosol can having a substantially non-concave bottom panel is characterized in that:

- the foot wall angle A1 is in the range of about –10 to 45°;
- the panel wall angle A2 is in the range of about 0-45°;
- the foot radius R2 is less than about 5mm;
- the countersink radius R3 is less than about 5mm;
- the panel radius R4 is larger than about 0.5mm;
- the unit depth H1 is in the range of about 2-20mm; and
- the panel depth H2 is in the range of about 1-15mm.

The foot wall angle A1 is selected such in order to provide a vertical structural element required for the pressure resistance. As from –10° sufficient pressure resistance is obtained. Whereas above 45° resistance to pressure decreases such that it requires a larger bottom wall thickness. A foot wall angle A1 of 0° is ideal for providing a maximum strength. However, additional tooling steps are required in order to reach this vertical position or positions closed to the vertical position. For best economy in relation to material consumption and for one step forming it is preferred that the foot wall angle A1 is within the range of 2-35°.

The panel wall angle A2 is in the range of about 0-45°. Preferably the panel wall angle A2 is within the range of 2-35° for similar arguments as given in relation to the foot wall angle A1.

The foot radius R2 is less than about 5mm although a minimum R2 is always required. A smaller foot radius R2 is beneficial to the strength. Preferably the foot radius R2 is within the range of about 0.5-1.5mm. At a lower radius tooling is minimum.

The countersink radius R3 is less than about 5mm although a small countersink radius R3 is always required. A lower countersink

radius is good for strength. Preferably the countersink radius is within the range of about 0.5-1.5mm for similar reasons as given above for the foot radius R3.

The panel radius R4 is larger than about 0.5mm. This provides a smooth connection between the central bottom panel and the countersink which is large enough for formation by proper tooling. Preferably the panel radius R4 is in the range of 1.0-1.5mm which is optimal for production and pressure performance.

The unit depth H1and panel depth H2 are generally within the range of 1.5mm and preferably within the range of 2-10mm providing a optimal form for the countersink.

According to a preferred embodiment the panel outer ring slope A3 is within the range of 0-35°. At a slope of 0° the central panel is substantially flat. At a larger outer ring slope A3 there is a smooth connection towards the countersink. At low outer ring slope A3 there is a postponement of pleat appearance. Within the preferred range of 2-20° the panel outer ring slope A3 provides normal curves.

According to another preferred embodiment the panel outer ring width L1 is within the range of about 0-15mm and preferably within the range of 1-5mm thereby providing normal or optimal protection against the forming of wringles.

According to a preferred embodiment the central panel radius R5 is larger than about 20mm. The larger the central panel radius the more flat the central portion will become in a transition from convex to substantially flat. The central panel radius R5 is preferably within the range of 30-100mm in order to resist pressure and avoid to go beyond the elastic limits.

According to another preferred embodiment the foot outer radius R13 is less than about 5mm and preferably within the range of 0.5-1.5mm thereby providing a good or optimal connection with the body wall.

According to another preferred embodiment the foot height H11 is within the range of about 1-7mm, preferably within the range of 2.5mm thereby providing an optimal or a further improved strength.

The pressurized can according to the invention has a diameter which is within the range of generally 20-80mm preferably within the practical ranges of 30-70mm. The bottom thickness may be within the range of 0.2-0.7mm and still withstanding internal pressures of up to 15bar preferably up to 18bar. More preferably the thickness of the bottom of the pressurized can is within the range of 0.3-0.6mm dependent on the diameter.

The pressurized can according to the invention is generally made of metal. Preferably the metal used is steal or aluminum. In the case

of aluminum it is preferred to use aluminum from the 3000series, such as aluminum 3104.

Mentioned and other features and characteristics of the pressurized can, such as an aerosol can according to the invention will be further discussed with reference to the annexed drawings which are given for information purposes and not intended to limit the invention to any extent.

Figure 1 is a cross section of a part of the bottom of a pressurized can according to the invention;

Figure 2 is a detail from figure 1 in relation to the foot of the pressurized can according to the invention; and

Figures 3-5 are other profiles of bottoms for a pressurized can.

Figure 1 shows a part of the bottom of a pressurized can according to the invention. The pressurized can has a cylindrical form of which the body can wall is substantially vertical and connected to a preferably necked opening for filling and emptying the content for the pressurized can.

In the given example the bottom has the following dimensions:

A1 food wall angle 1°
A2 panel wall angle 1°
A3 panel outer ring slope 0°
L1 panel outer ring width 0mm
R2 foot radius 1mm
R3 countersink radius 1mm
R4 panel radius 1mm
R5 center panel radius 40mm.

The bottom has a thickness of 0.4mm and was made of aluminum 3140.

The can had a foot radius R1 of 17.5mm. The diameter of the pressurized can according to the invention was 45mm.

At a unit depth H1 of 10.0 to 10.4mm and at a panel depth H2 of 4.0 to 4.4mm the pressurized can could withstand a pressure up to about 19bars prior to the formation of buckles.

The figures 3, 4 and 5 show other profiles for a bottom of a pressurized can.

For aerosol cans having a diameter of 30mm, 45mm and 60mm the main parameters for the bottom shown in figure 3 are as follows:

Main parameters

Parameter	Range	Preferred range	Importance
Ø1	20 - 45	35 - 40	High
H2	3 - 25	5 - 15	High
R2	0.5 - 3	0.7 - 2	High
R4	0.5 - 3	0.7 - 2	High
R5	15 - 100	25 - 50	Minor
R6	0.5 - 10	0.7 - 5	Minor
H1	2 - 20	4 - 10	Minor

In relation to the bottom profiles shown in figure 4 the following main parameters are relevant:

Main parameters

Parameter	Range	Preferred range	Importance
Ø1	20 - 45	35 - 40	High
H2	3 - 25	5 - 15	High
R2	0.5 - 3	0.7 - 2	High
R4	0.5 - 3	0.7 - 2	High
A1	0 - 30°	0 - 15°	High
R5	15 - 100	25 - 50	Minor
R6	0.5 - 10	0.7 - 5	Minor
H1	2 - 20	4 - 10	Minor

Finally, the main parameters of the bottom profile shown in figure 5 are as follows:

Main parameters

Parameter	Range	Preferred range	Importance
H2	3 - 25	5 - 15	High
R2	0.5 - 3	0.7 - 2	High
R4	0.5 - 3	0.7 - 2	High
A1	0 - 30°	0 - 15°	High
R5	15 - 100	25 - 50	Minor
R6	0.5 - 10	0.7 - 5	Minor

CLAIMS

1. Pressurized can, such as an aerosol can, having a bottom comprising a panel connected via a countersink and a foot to the can body wall, which bottom has a panel with a substantially non-concave form.

2. Pressurized can, such as an aerosol can, having a bottom comprising a panel connected via a countersink and a foot to the can body wall, which bottom has a panel with a substantially non-concave form.

3. Pressurized can according to claim 1, wherein:

- the foot wall angle A1 is in the range of about –10 to 45°;
- the panel wall angle A2 is in the range of about 0-45°;
- the foot radius R2 is less than about 5mm;
- the countersink radius R3 is less than about 5mm;
- the panel radius R4 is larger than about 0.5mm;
- the unit depth H1 is in the range of about 2-20mm; and
- the panel depth H2 is in the range of about 1-15mm.

4. Pressurized can according to claim 1 or 2, wherein the foot wall angle A1 is in the range of 0-45°, preferably within the range of 2-35°.

5. Pressurized can according to claim 1-3, wherein the panel wall angle A2 is in the range of about 2-35°.

6. Pressurized can according to claim 1-4, wherein the foot radius R2 is in the range of about 0.5-1.5mm.

7. Pressurized can according to claim 1-5, wherein the countersink radius R3 is in the range of about 0.5-1.5mm.

8. Pressurized can according to claim 1-6, wherein the panel radius R4 is in the range of about 1.0-1.5mm.

9. Pressurized can according to claim 1-7, wherein the unit depth H1 is in the range of 5-15mm.

10. Pressurized can according to claim 1-8, wherein the panel depth H2 is in the range of 2-10mm.

11. Pressurized can according to claim 1-9, wherein the panel outer ring slope A3 is in the range of about 0-35°, preferably within the range of 2-20°.

12. Pressurized can according to claim 1-10, wherein the

panel outer ring width L1 is within the range of about 0-15mm, preferably within the range of 1-5mm.

13.Pressurized can according to claim 1-11, wherein the center panel radius R5 is larger than about 20mm, preferably within the range of 30-100mm.

14. Pressurized can according to claim 1-12, wherein the foot outer radius R13 is less than about 5mm, preferably within the range of 0.5-1.5mm.

15. Pressurized can according to claim 1-13, wherein the foot height H11 is in the range of about 1-7mm, preferably within the range of 2-5mm.

16. Pressurized can according to claim 1-14 having a diameter in the range of about 20-80mm, preferably within the range of 30-70mm, and a bottom thickness in the range of about 0.2-0.7mm, preferably within the range of 0.3-0.6mm.

17. Pressurized can according to claim 1-15, having a pressure resistance of up to about 15bar, preferably up to about 18bar.

18. Pressurized can according to claim 1-16 made of steel or aluminum, such as aluminum of the 3000series.

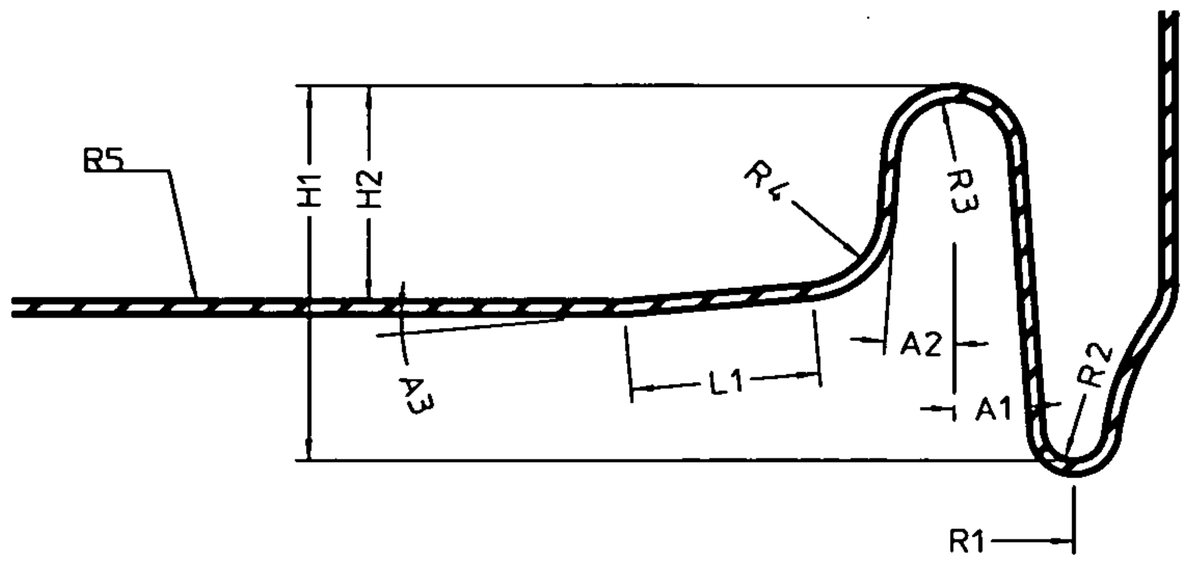

Figure 1

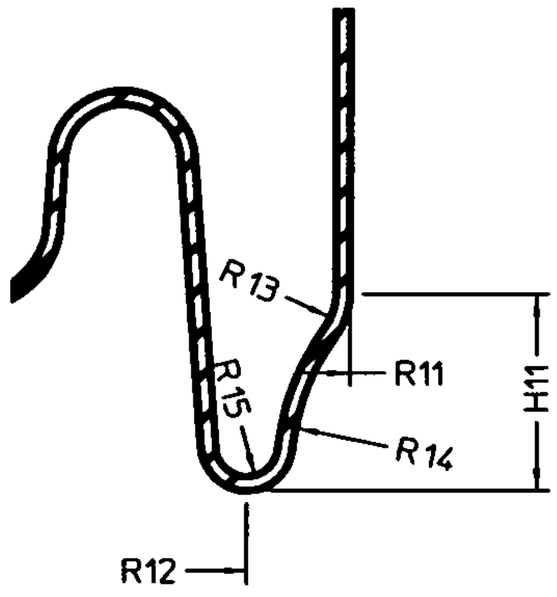

Figure 2

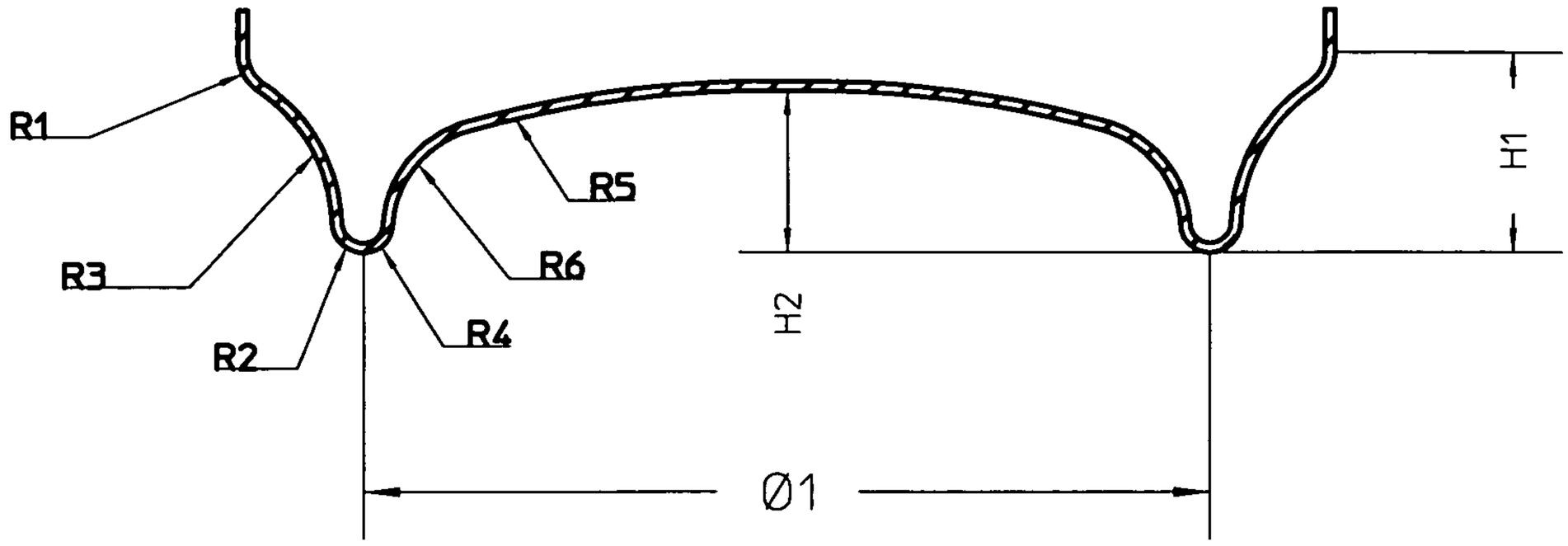

Figure 3

Figure 4

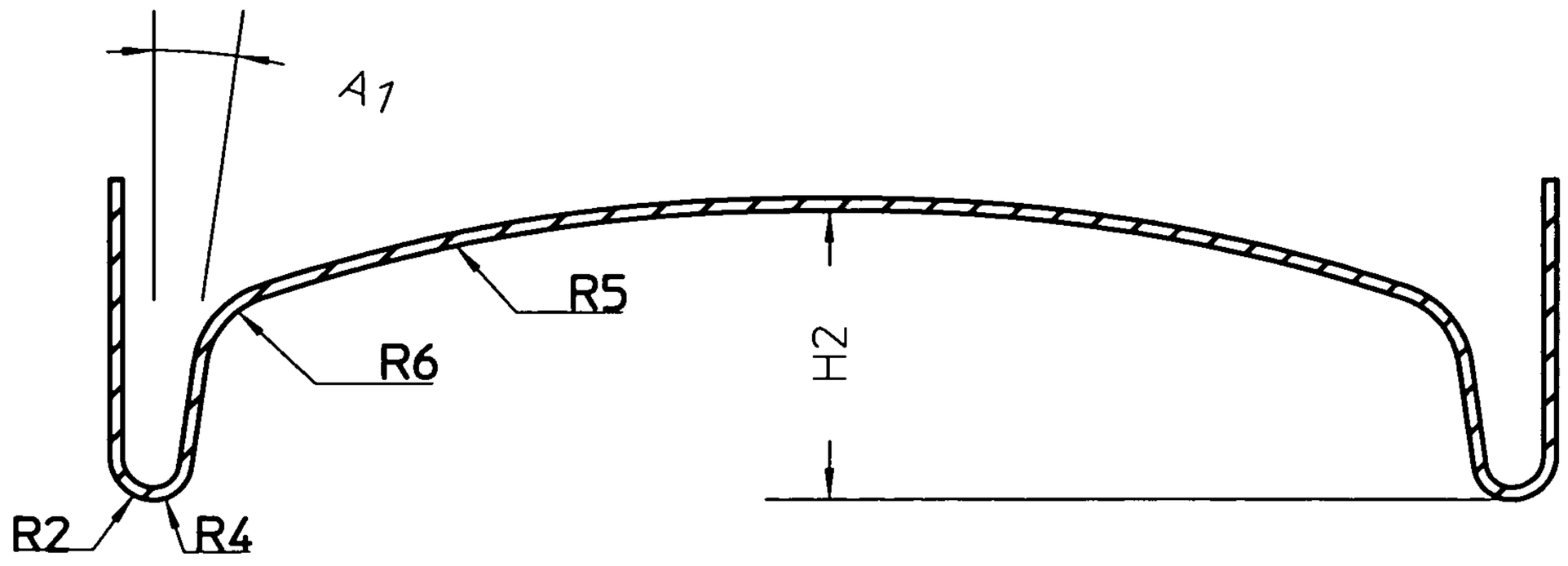

Figure 5

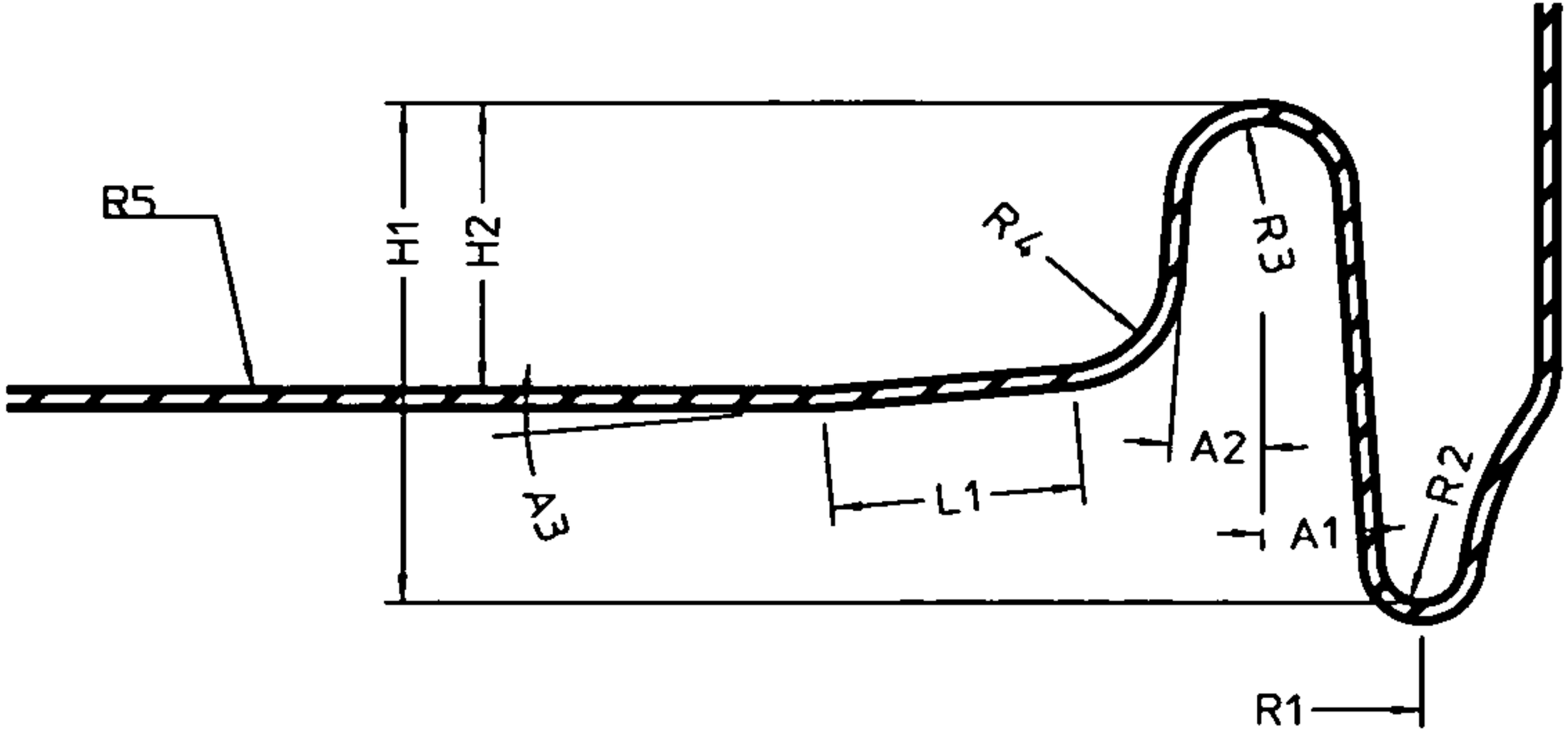
R5
H1
H2
R4
R3
A3
L1
A2
A1
R2
R1