June 10, 1952 G. F. McLAUGHLIN 2,600,015

STORAGE SYSTEM FOR PRESSURIZED FLUIDS

Filed June 2, 1947 3 Sheets-Sheet 1

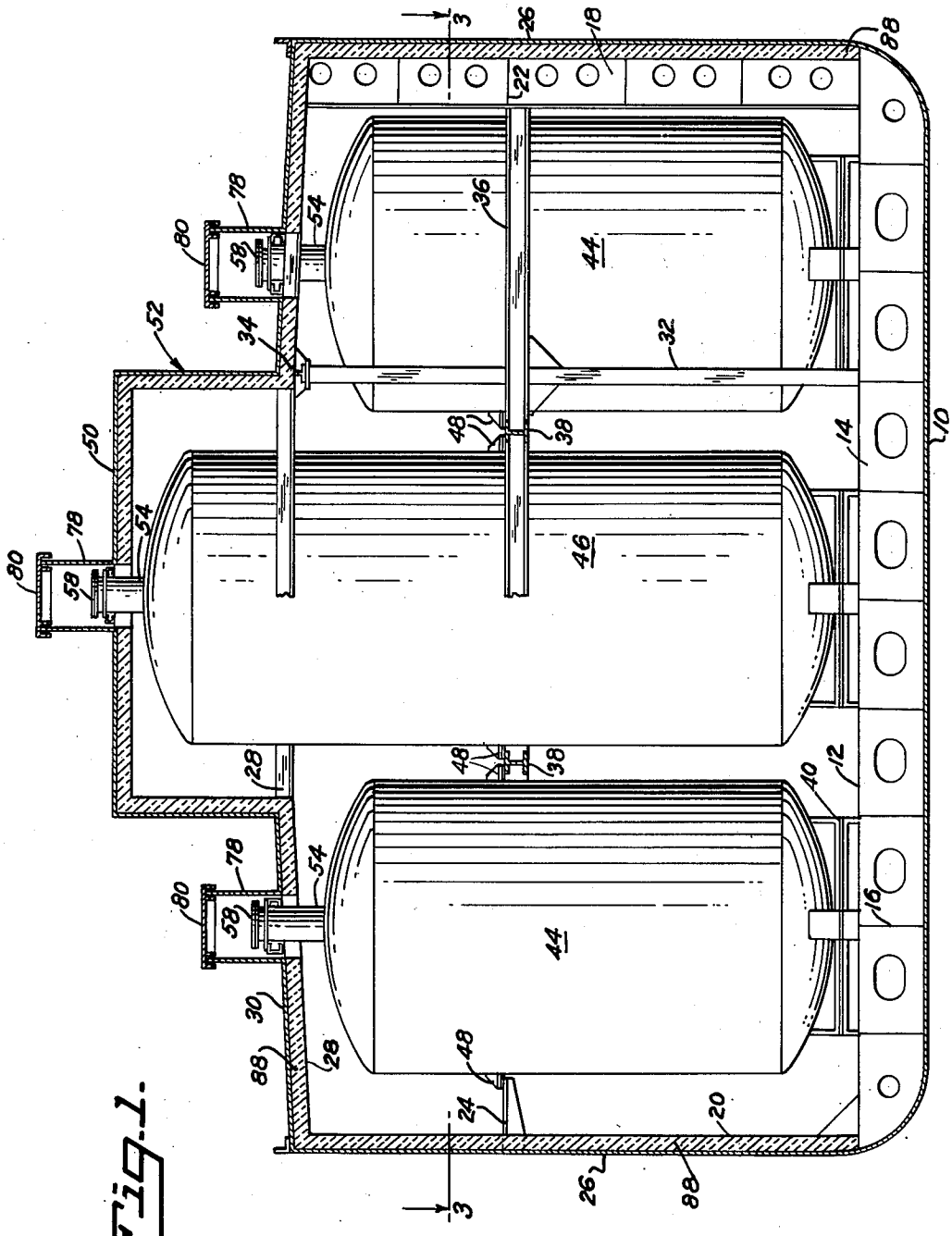

Fig. 1.

INVENTOR.
GEORGE F. McLAUGHLIN
BY Taylor and Lassagn
ATTORNEYS

June 10, 1952 G. F. McLAUGHLIN 2,600,015

STORAGE SYSTEM FOR PRESSURIZED FLUIDS

Filed June 2, 1947 3 Sheets-Sheet 2

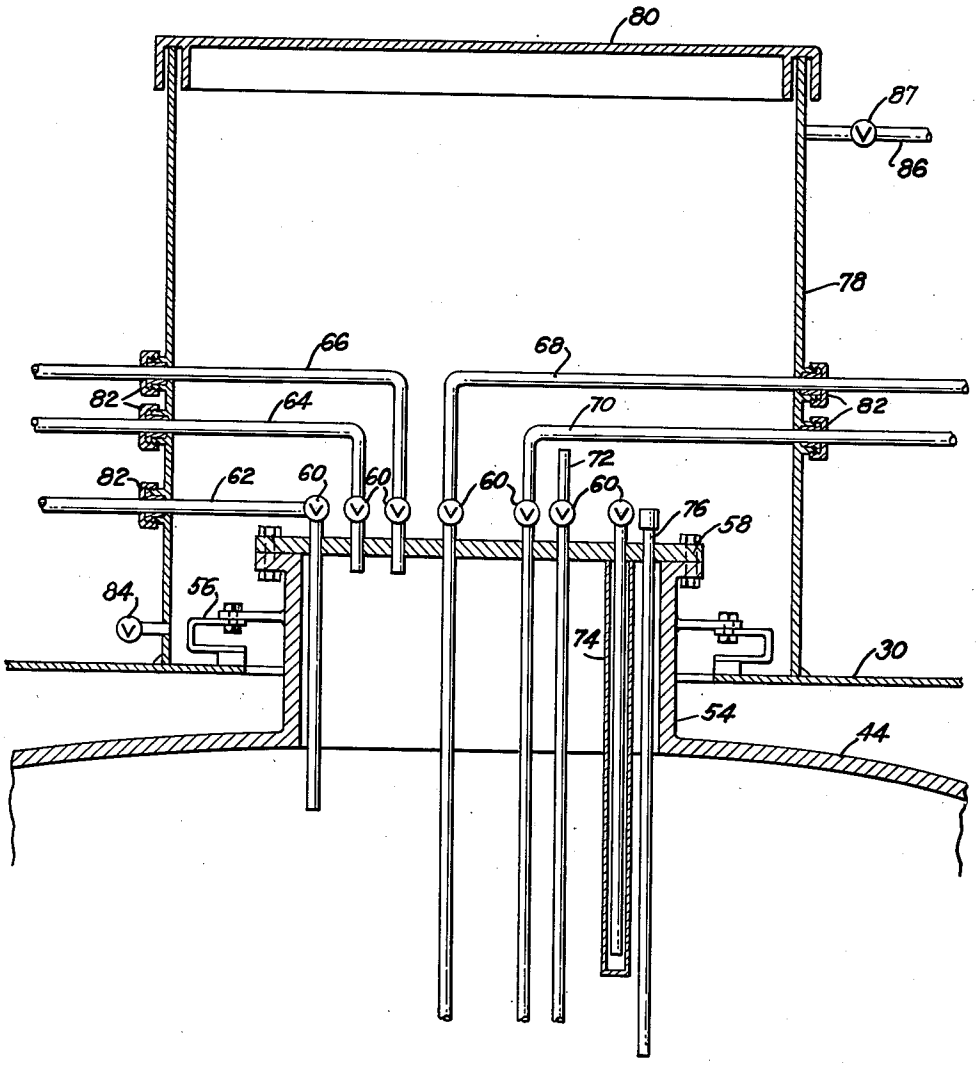

Fig. 2.

INVENTOR.
GEORGE F. McLAUGHLIN
BY Taylor and Lassagn
ATTORNEYS

June 10, 1952 G. F. McLAUGHLIN 2,600,015

STORAGE SYSTEM FOR PRESSURIZED FLUIDS

Filed June 2, 1947 3 Sheets-Sheet 3

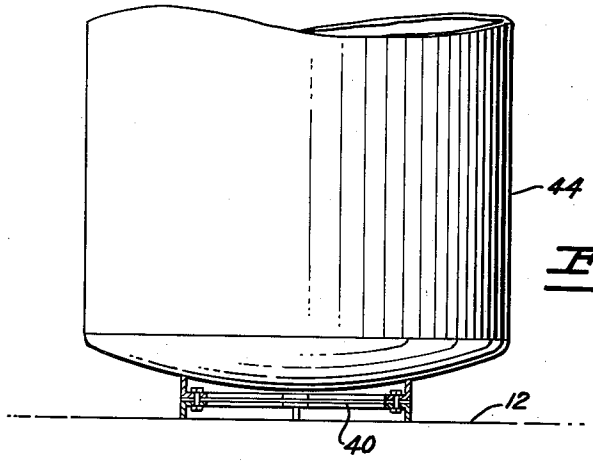

Fig. 4.

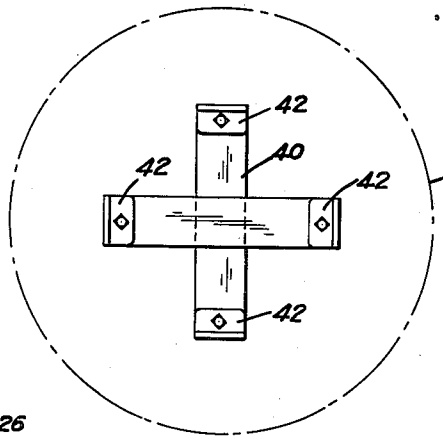

Fig. 5.

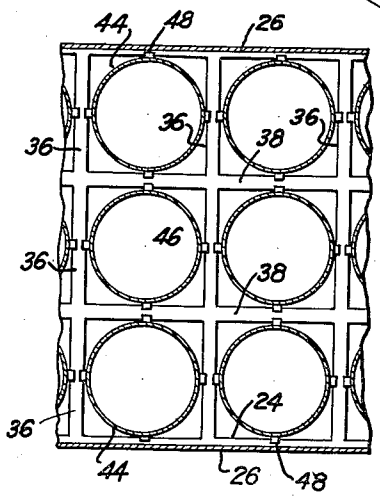

Fig. 3.

INVENTOR.
GEORGE F. McLAUGHLIN
BY Taylor and Lassagne
ATTORNEYS

Patented June 10, 1952 2,600,015

UNITED STATES PATENT OFFICE

2,600,015

STORAGE SYSTEM FOR PRESSURIZED FLUIDS

George F. McLaughlin, Berkeley, Calif.

Application June 2, 1947, Serial No. 751,931

4 Claims. (Cl. 220—88)

1

This invention relates to a bulk fluid carrier, and more particularly to a ship adapted for the efficient and safe carrying of liquid petroleum products, such as butane, propane, etc., which are gaseous at normal pressures and temperatures.

Broadly, the embodiment of the invention is adaptable to all types of cargo ships to convert such ships to bulk fluid carriers, and to this end a ship is provided, preferably with three or more spaced rows of individual vertical tanks running athwart ship, each row containing a plurality of spaced tanks in the longitudinal direction. Each individual tank is supported below deck in the hold of the ship by appropriate saddles and chocks, while a fluid-tight expansion joint connection is provided between the deck and the neck portion of each tank, said neck portions being the only parts of the tanks which extend above the deck level. A manhole cover having mounted thereon all of the valve and piping connections for the tank is fitted onto the upper end of the neck portion of each tank, thus facilitating the simultaneous removal of all of the valves and internal piping of a tank for inspection or repair by a mere removal of the manhole cover by lifting gear.

Each of the tank necks is enclosed by a water and gas tight trunk secured to the deck and having a removable cover so that access may be had to the valves carried by the manhole cover of the tank. In the event that gas leakage occurs from the valves within the trunks, the trunks prevent the escape of the gas therefrom. Each of the trunks is provided with a vent line to remove any leakage gas from the trunks for transfer to a vent outlet remotely located from the deck and cargo, as, for example, at the top of the ship's mast.

As a precaution against the possible building up below deck of a combustible air and gas mixture, due to damage to any tank and consequent leakage, the hold atmosphere surrounding the tanks is charged with a non-toxic, non-corrosive inert gas by a suitable feed mechanism responsive to a gas analyzer and adapted at all times to maintain the inert gas constituent of the hold atmosphere at not less than 40% of the total volume of the hold, thus providing an atmosphere which will not support combustion and in which men can work safely for short periods of time.

The tanks in the middle row or rows are of considerably greater volume than the tanks in the side rows, due to the provision of a longitudinal deck house, through the topside of which the

2

neck portions of the middle row tanks extend. The deck house not only increases the load capacity of the ship by allowing the use of tanks of greater volume, but has the added function of serving as an anti-blast and fire-break superstructure to prevent, in the event of an explosion or fire occurring in the trunk of a tank in one of the side rows, propagation of the explosion or fire to the middle row trunks which are located at a substantially higher level or to the trunks in the other side row which are shielded by the deck house.

These and other objects and advantages of the invention will be apparent from the following description taken in conjunction with the drawings forming part of this specification, and in which:

Figure 1 is a view in transverse section through a ship embodying the invention;

Figure 2 is an enlarged detailed view in section of the neck portion of a tank and surrounding trunk;

Figure 3 is a reduced scale plan view in section taken along lines 3—3 of Figure 1;

Figure 4 is a view in elevation of the lower portion of a tank and its lowermost supporting saddle; and

Figure 5 is a plan view of the supporting saddle of Figure 4 with the tank in shadow outline.

Referring to the drawings for more specific details of the invention, Figure 1 shows the midship section of a ship comprising an outer bottom 10, an inner bottom 12 supported by a plurality of spaced transverse floors 14 and longitudinal girders 16, vertical webs 18 and angles 20 supported by the inner bottom 12 and interconnected by longitudinal chocks 22 and stringers 24, sides 26 supported by the webs 18 and angles 20, and deck beams 28 supported by the webs 18 and angles 20, and in turn supporting a deck 30. Pipe stanchions 32 support longitudinal deck beams 34 and 28, and also serve as support members for transverse I-beams 36 extending between the sides 26, said I-beams 36 serving as supports and being interconnected by longitudinal I-beams 38. The I-beams 36 and 38 define a supporting structure comprising a plurality of rectangular cells, as shown in Figure 3.

Spaced rows of saddles 40 supported by the inner bottom 12 and comprising a cruciform structure having upstanding feet 42, as shown in Figure 5, cradle the rounded ends of side tanks 44 and center tanks 46, said tanks being provided with flanged lugs 48 for the supplemental support of said tanks by the I-beams 36 and 38. The

deck 30 and the topside 50 of a centrally and longitudinally arranged deck house 52 supported by the deck are provided with apertures for the extension therethrough of the necks 54 of the tanks 44 and 46, said necks having a fluid-tight expansion joint connection 56 with the deck 30 and topside 50 of the deck house.

A manhole cover 58 removably secured in any desired manner to the upper ends of the necks 54 of the tanks, as by bolts not shown, supports a plurality of liquid and vapor lines, each line having a control valve 60, said lines comprising a vapor line 62, one way exit lines 64 and 66 for vapor escape, two way liquid eduction lines 68 and 70, and a test line 72 terminating just above the manhole cover 58. A gaging pipe 74 and a therometer well 76 are also carried by the cover 58.

Water tight trunks 78 secured to the deck 30 and the topside 50 of the deck house 52 and having an access hatch 80 enclose the above-deck portions of the tanks 44 and 46, said trunks being provided with apertures for the passage therethrough of the piping within the trunks. Expansion joints 82 are provided adjacent the piping apertures, while there is further provided for each trunk a self-closing drain valve 84 and a vapor vent line 86 having a valve 87.

It will be understood that the eduction lines 68 and 70 of each tank lead to a common manifold line, not shown, for the charging or discharging of liquefied butane, propane, etc. to or from any predetermined tank, said manifold line having appropriate ship to shore hose connections, and also that the vapor escape lines 64 and 66, and vent line 86 from each trunk lead to a common line, not shown, which has a bellmouth terminus preferably at the top portion of the foremast of the ship, said terminus being preferably provided with a section fan, not shown. Prior to the opening of any of the access hatches 80 of the trunks 78, to operate any of the valves 60, the valve 87 is opened to exhaust the trunk of any combustible vapor which may have accumulated therein, thus preventing any explosion or the like, within the trunks during operation of the valves.

In order to provide for a minimum safe ullage within each tank and a consequent maximum safe loading, the deck 30 and the sides 26 are provided with a layer of insulation 88 to minimize temperature changes within the hold induced by climatic conditions. The provision of insulation in this manner dispenses with the individual lagging of the tanks, and it has been found possible to load the individual tanks to as much as 90.4% of capacity with propane, and 92.6% with butane.

An inert gas producer, not shown is carried by the ship and is adapted, preferably, to process the exhaust gas of an internal combustion engine through a cycle of compression, cooling, washing, filtering and compressing to provide an inert gas having the following percentage composition: oxygen, 1–3%; carbon monoxide, 0.0-trace; and the balance carbon dioxide and nitrogen. This inert gas is metered into the sealed hold of the ship in accordance with the requirements, as given by a gas analyzer, to maintain at least 40% by volume of inert gas in the hold. A percentage value of 40% of the inert gas of the described nature within the hold is sufficient to prevent the supporting of combustion therein, and yet the concentration of the inert gas is sufficiently low to allow men to work safely for short periods in the hold. Inert gas of the described composition is non-toxic as well as non-corrosive.

It is readily apparent from the foregoing that the embodiment of the invention provides for a high efficiency in the handling of a maximum load of liquefied cargo under optimum safety conditions. Thus, the location of all piping externally of the hold, either on deck or in the trunks, is conducive to a high efficiency in the loading and unloading of the cargo, as well as providing for rapid and convenient repair and maintenance of the piping and valves; the deck and side insulation together with the increment to the hold space provided by the deck house make it possible for the ship to carry a maximum weight of liquefied petroleum products; and the inert gas blanketing of the hold space, the water and gas-tight deck trunks, and the deck house, serving as an anti-blast and fire-wall structure, provide for the carrying of the cargo with optimum safety.

It is to be pointed out that more than one row of intermediate tanks may be located beneath the deck housing, and that the single intermediate row shown in the drawings is by way of illustration and not of limitation. It is also to be understood that the embodiment of the invention shown and described is subject to other modifications within the spirit of the invention and the scope of the appended claims.

I claim:

1. A storage system for pressurized fluids comprising at least three tanks spacedly arranged transversely of a laterally enclosed cavity and supported therein, said outer tanks being provided with neck portions extending through planar members forming partial upper closures for said cavity at each side thereof, a housing having vertically disposed side walls extending upwardly from the inner margins of said planar members and having a horizontally disposed roof constituting a central upper closure for said cavity, said intermediate tank having a neck portion extending through the roof of said housing, and a removable closure for each tank at the neck portion thereof, the side walls of said housing serving as anti-damage propagation bulwarks between adjacent tanks.

2. A storage system as set forth in claim 1, wherein the outer tanks and the intermediate tank are provided with expansion joint connections between the neck portions thereof and said planar members and housing roof, and wherein fluidtight trunks supported by said planar members and said housing roof and enclosing said neck portions are provided, said trunks being provided with access hatches.

3. A storage system as set forth in claim 2, wherein the intermediate tank is greater in volume than each of the outer tanks substantially in proportion to the height of the side walls of said housing.

4. A storage system for pressurized fluids comprising at least three spaced rows of longitudinally spaced tanks, the tanks of the two outer rows being supported within a laterally enclosed cavity and having neck portions extending through planar members forming partial upper closures for said cavity at each side thereof, an expansion joint connection between each of said neck portions and a planar member, said intermediate tanks being supported within said cavity and having neck portions extending through the roof of a housing of substantial height having side

walls extending upwardly from the inner margins of said planar members, expansion joint connections between the neck portions of said intermediate tanks and said housing roof, fluidtight trunks carried by said planar members and said housing roof, with said trunks enclosing the neck portions of said tanks, and an access hatch in each trunk.

GEORGE F. McLAUGHLIN.

REFERENCES CITED

The following references are of record in the file of this patent:

UNITED STATES PATENTS

Number	Name	Date
97,442	Quinan	Nov. 30, 1869
368,682	Oriolle	Aug. 23, 1887
758,074	Holmes	Apr. 26, 1904
1,049,490	Jack	Jan. 7, 1913
1,841,417	Murphy	Jan. 19, 1932
2,048,312	Zulver	July 21, 1936
2,049,987	Willenborg	Aug. 4, 1936
2,073,982	Woodruff	Mar. 16, 1937

FOREIGN PATENTS

Number	Country	Date
449,697	Great Britain	July 2, 1936