Aug. 23, 1932. C. H. HODGKINS 1,873,405

ELECTROMAGNETIC VALVE ACTUATING DEVICE

Filed Aug. 20, 1929 2 Sheets-Sheet 1

Fig. 1.

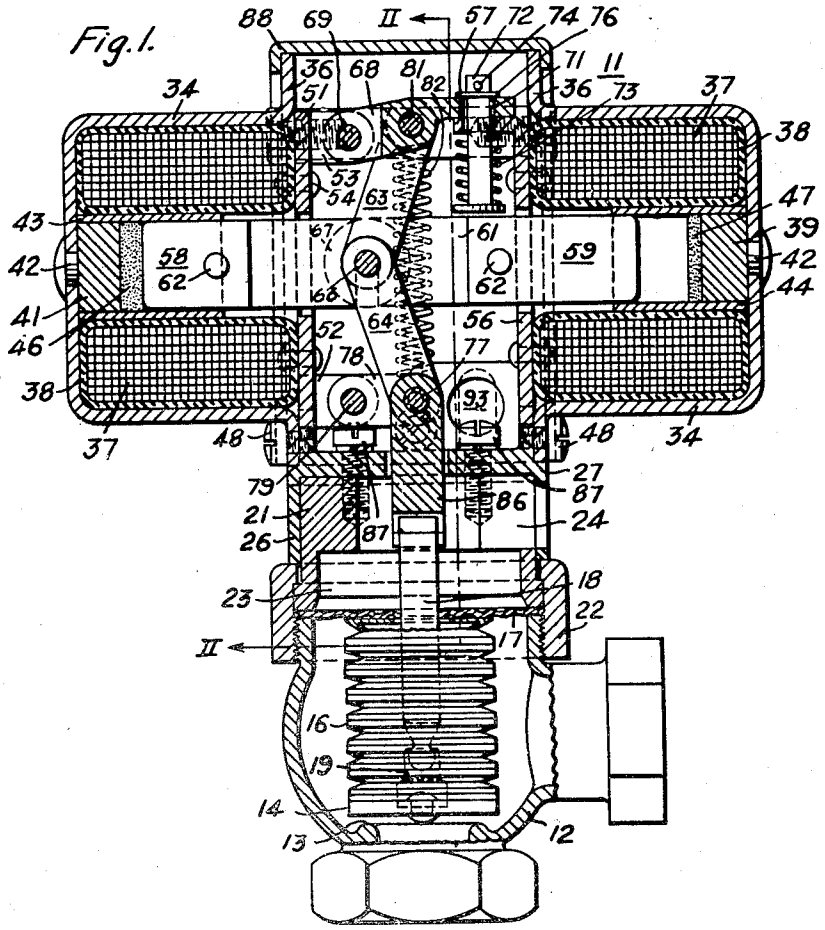

Fig. 2.

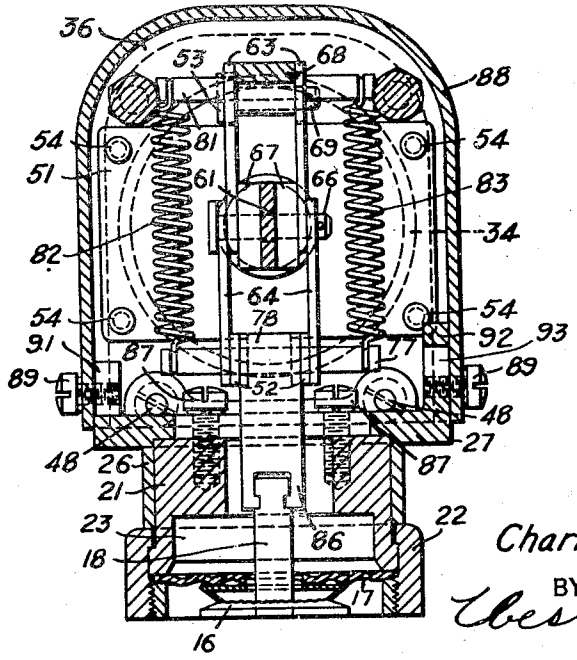

INVENTOR
Charles H. Hodgkins.
BY
Wesley G. Carr
ATTORNEY

Aug. 23, 1932. C. H. HODGKINS 1,873,405

ELECTROMAGNETIC VALVE ACTUATING DEVICE

Filed Aug. 20, 1929 2 Sheets-Sheet 2

Fig. 3.

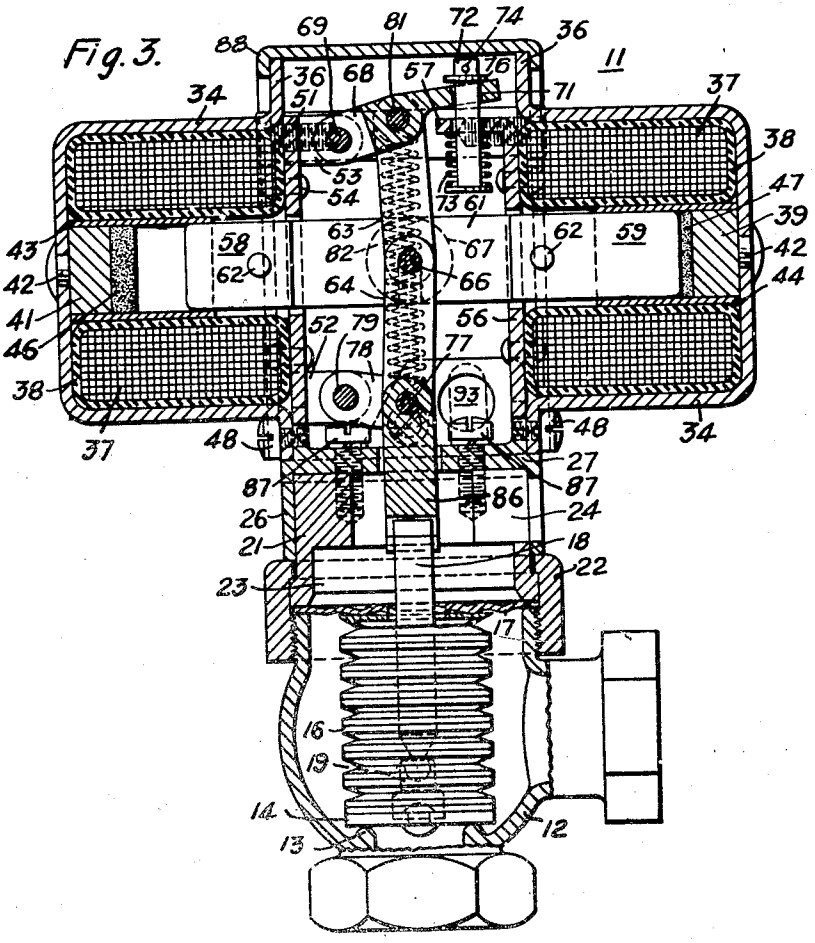

Fig. 4.

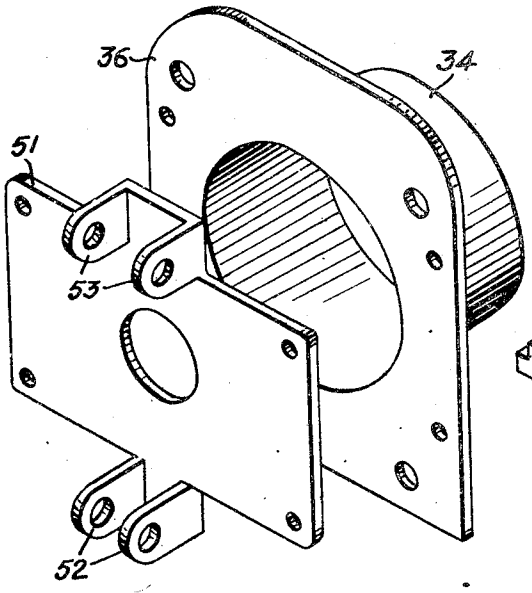

Fig. 5.

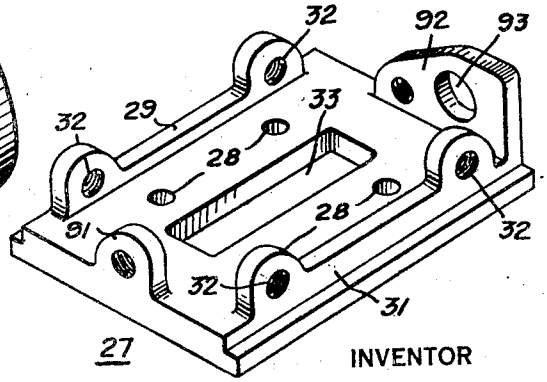

INVENTOR

Charles H. Hodgkins.

BY

Wesley G. Carr

ATTORNEY

Patented Aug. 23, 1932 1,873,405

UNITED STATES PATENT OFFICE

CHARLES H. HODGKINS, OF PITTSBURGH, PENNSYLVANIA, ASSIGNOR TO WESTINGHOUSE ELECTRIC & MANUFACTURING COMPANY, A CORPORATION OF PENNSYLVANIA

ELECTROMAGNETIC VALVE-ACTUATING DEVICE

Application filed August 20, 1929. Serial No. 387,253.

My invention relates to electromagnets and particularly to electromagnets for actuating valves.

An object of my invention is to provide a relatively compact simple and inexpensive electromagnetic actuating means for a valve.

Another object of my invention is to provide an electromagnetic actuating means for a valve that may be built up as a unit and be easily and quickly mounted on, and removed from, a valve.

Another object of my invention is to provide an electromagnetic valve-actuating structure that shall require a relatively small amount of electrical energy to operate the same from one position of the valve disc to another and that shall be substantially noiseless in its operating movements.

Another object is to provide an electromagnetic valve-actuating device that shall be energized only during operation of the valve, the device locking the valve in either its open or its closed position.

Another object of my invention is to provide a substantially enclosed structure that shall be self contained.

In practicing my invention, I provide a spacer, which may be mounted on a valve body by a clamp nut, a base plate secured against the outer surface of the spacer, the base plate having two spaced parallel-extending ribs on its outer surface, a pair of magnet-coil-receiving magnetic members, each of cup shape and having a peripheral flange at the open end thereof, and side plates having lugs integral therewith, the side plates being secured against the outer face of the respective peripheral flanges. A magnet coil and a tubular guide member are located in each of the magnetic members of cup shape, as well as resilient washers and magnetic pole pieces.

An armature core structure is movable within the magnet coils and, more particularly, within the tubular guide members. A toggle is provided, the mid point of which is operatively connected to the movable core structure by a pivot pin. The ends of the links of the toggle are pivotally secured to links or arms having a pivotal mounting on the lugs of one of the side plates. One of the pivotally mounted links is extended beyond its connection with the toggle and has a yielding connection with the other side plate.

In the drawings,

Figure 1 is a view, mainly in section, of a device embodying my invention, the valve being shown in its open position.

Fig. 2 is a view, in lateral section therethrough, taken on line II—II of Fig. 1.

Fig. 3 is a view, mainly in section, showing the valve in its closed position,

Fig. 4 is a view, in perspective, of a magnetic casing and side plate, and

Fig. 5 is a view, in perspective, of a base plate.

The device embodying my invention and comprising, more particularly, an electromagnetic actuating structure 11 is adapted to be operatively associated with a valve 12 which is shown in the drawings as a right-angle valve embodying the usual inlet and outlet parts and a suitable valve seat 13 therein.

A valve disc 14 of the usual kind is provided and, in order to make the employment of a stuffing box unnecessary, I prefer to use a sylphon bellows 16 having one end thereof suitably secured against the valve disc 14, while the other end thereof is suitably secured against a metal washer 17. This structure is adapted to provide an air-tight assembly which makes the employment of a stuffing box unnecessary and, therefore, aids in reducing the amount of energy necessary to operate the valve disc. A valve stem 18 has a ball-and-socket connection with a lug 19 secured to the valve disc inside of the sylphon bellows 16.

A spacer 21, of substantially circular shape, is provided, one end portion of which is fitted against the washer member 17. A circular clamping nut 22 fits over the body of the spacer 21 and engages a shoulder portion thereof and has a screw-threaded engagement with the upper portion of the body of the valve 12, in a manner well known in the art. An opening 23 is provided in the spacer to permit the valve stem 18 to extend therethrough.

The member 21 is provided with a relative-

ly large lateral opening 24 in its outer end and an annular cover member 26 is provided which may turn peripherally thereon to permit of access to the opening 24 to permit of an operator connecting the electromagnetic actuating means to the valve stem.

A base plate 27, of substantially rectangular shape, is provided and may be mounted against the outer face of the spacer, a plurality of openings 28 being provided therein, as more particularly shown in Fig. 5 of the drawings, for receiving mounting screws. The member 27 is provided with two spaced parallel extending ribs 29 and 31, each of which is provided with screw-threaded openings 32 located adjacent to the ends of the ribs for a purpose to be hereinafter set forth, and an elongated opening 33 is provided in the plate 27 to permit a link member, to be hereinafter described, to extend through the base plate.

Each of a pair of magnet-coil-receiving members 34, respectively of substantially cup shape and of magnetic material, is provided with an integral peripheral flange 36 adjacent to the open end of the member of cup shape, this flange being substantially rectangular in shape and extending at substantially right-angles to the axis of the member of cup shape. The flange 36 may, of course, be made of some other shape, particularly at the top portion thereof.

A magnet coil 37 is located in each of the members 34 and is so designed as to cooperate with a supply circuit of suitable voltage, as is well known in the art. The magnet coil may be covered by suitable electric insulating material 38, in a manner also well known in the art. Pole pieces 39 and 41 of magnetic material are located within the members 34 of cup-shape, being riveted to the wall of the enclosing member of cup-shape by an integral reduced portion 42. A tubular member 43, made of magnetic material, is located within the left-hand member 34 and surrounds the pole piece 41, while a similar tubular member 44 is located within the right-hand member surrounding the pole piece 39, this tubular member being made of non-magnetic material. A relatively thick resilient washer 46 is located in the tubular member 43 against the member 41, and a resilient washer 47 is located in the tubular member 44 against the pole piece 39. Both of these washers may be made of the leather or of any other suitable resilient material adapted to withstand the wear to which they will be subjected.

Each of the members 34 is secured against the respective ribs 29 and 31 by a plurality of short screws 48 extending through openings adjacent to the bottom edge of the flange 36, so that the two magnet coil-receiving members and the elements located therein will be mounted on the base plate in opposed spaced and coaxially aligned positions, substantially as shown in Figs. 1 and 3 of the drawings.

A side plate 51 of magnetic material, provided with a pair of laterally extending lugs 52 adjacent to its bottom edge and a pair of laterally extending spaced lugs 53 adjacent to its upper edge, is mounted against the outer face of the flange 36 of the left-hand member 34 of cup shape. The lugs 52 and 53 may be made integral with the plate 51 and are perforated adjacent to the outer ends to receive a pivot pin, as will hereinafter be set forth in detail. The plate 51 may be secured against the flange 36 by some suitable means, such as rivets 54.

A similar side plate 56 is provided for the other member 34 of cup-shape and this magnetic side plate is provided with a laterally-extending integral lug 57 having an opening therethrough. It may be noted that the lugs 52 and 53, and, more particularly the openings at the ends thereof, extend in a direction at right-angles to the lug 57 and the opening therein.

A magnet core structure includes a relatively short armature core 58 and a longer armature core member 59 which are rigidly connected to a non-magnetic bar 61, by rivets 62 extending through the two members. The outer diameter of the members 58 and 59 is such that they fit relatively closely within the tubular members 43 and 44, so that a piston action of the respective members 58 and 59 in the tubular members 43 and 44 may be obtained in order to slow down the movement of the core member by dash-pot action, thereby reducing the impact and the noise when the core structure is reciprocally moved to actuate the valve disc.

A toggle structure is provided and includes a pair of upper bars or members 63 and a pair of lower bars 64 which are pivotally connected to each other, at their over-lapping ends, by a pin 66 which extends also through the non-magnetic bar 61, spaced washers 67 being provided between the bars 63 and the member 61. The upper ends of the bars 63 are pivotally connected to a pivotally mounted bar 68, intermediate its ends. One end of the bar 68 is pivotally mounted on a pin 69 which extends through the openings in the spaced lugs 53. The other end of the bar 68 is provided with an opening 71 and this opening is located immediately above the opening in the lug 57 of the side plate 56 hereinbefore described. A pin 72, having a compression spring 73 located thereon, between a head on its lower end and the lug 57, extends through the opening 71, a cotter pin 74 and a washer 76 being provided thereon.

The lower ends of the bars 64 have a pin 77 extending therethrough and these bars or links are pivotally connected to a pivotally mounted link bar 78, the other end of which is pivotally mounted, by means of a pin 79,

on the lugs 52 of the side plate 51. The pivotal connection between the links 63 and the bar 68 is effected by a pin 81 which is extended beyond the outside of the bars 63, and tension springs 82 and 83 connect the outer ends of the pins 77 and 81.

A valve link 86 has a slotted connection with the valve stem 18 at the upper end of the valve stem and a pivotal connection with the lower ends of the toggle bars 64 by means of the pin 77.

The base plate 27 is secured against the outer surface of the spacer 21 by a plurality of short screws 87 extending through the openings 28 in the base plate. A cover 88 is provided for the space between the flanges 36 of the magnet-coil-receiving members 34 and may be held in proper operative position by screws 89 extending through the lower edge portions thereof and into openings in lugs 91 and 92 on the base plate. The lug 92 is provided also with an opening 93 to permit bringing out suitable electric conductors connected to the respective magnet coils 37.

Fig. 1 of the drawings shows the actuating structure in the position which the parts will occupy when the valve disc is out of engagement with the valve seat. The core member 58 is in operative engagement with the resilient washer 46 and the toggle is "broken" When it is desired to close the valve, this may be effected by momentarily energizing the right-hand magnet-coil 37 by any suitable means to actuate the core member 59, thus causing it and the elements operatively associated with it to move to the right.

The toggle is thereby straightened, the arm 68 remaining initially substantially stationary, and the pin 77 moves downwardly, whereby the member 86, the valve stem 18 and the valve disc 14 will be moved downwardly to close the valve. The engagement of the valve disc and the valve seat is effected just before the toggle arms are parallel to each other, and once the valve has been closed, the link or arm 68 moves upwardly to compress the spring 73. When the toggle-joint pin 66 has been moved to the right beyond a straight line connecting the centers of the pins 77 and 81, the toggle will be locked, and the valve will be maintained in its closed position, with a pressure determined by the excess pressure of spring 73 over the springs 82 and 83, as modified by the differences in the length of the lever arms of these springs. The connecting member 61 is provided with a slot through which the pin 66 extends so that this pin may move downwardly as described.

The tubular member 43, being made of magnetic material, will act upon core member 58 to aid in slowing down the movement of the armature core structure when the same is moving towards the left to open the valve. It therefore acts as a brake, reducing the pull on core member 58 and reducing also the magnetic chatter of the movable parts. The springs 82 and 83 will effect compression of the sylphon bellows to cause opening of the valve.

The members 58 and 59 are made of different axial lengths in order to co-operate with the other parts of the actuating structure, it being obvious that the movement of the core structure, relatively to a line connecting the axes of the pins 77 and 81, will be greater when moving in the direction to effect opening of the valve than when moving in the direction to close the valve. Core member 59 is that part of the magnetic structure operative to effect closure of the valve, and core 58 is that part of the magnetic structure operative to effect opening of the valve. Work is being done by the magnet over the entire length of travel of the movable parts during the closing movement, whereas, in the opening movement, the magnet merely "breaks" the toggle. After the toggle is broken, the springs 73, 82 and 83 assist the magnet in its further movement. It is, therefore, desirable to provide a good magnetic circuit for those members which are effective in the closing movement and to weaken the magnetic pull on those members which are effective in the opening movement after the toggle is broken, not only because of the differences in the pulls but also to reduce the slam and noise when stopping the movable structure.

The device embodying my invention provides an electromagnetic actuating structure for a valve which may be easily and quickly associated with, and removed from, a valve, both operations being effected in a minimum amount of time and with the use of but one or two tools. No stuffing box is required, and only a momentary energization of the respective magnet coils is necessary to effect movement of the armature core structure and of the valve disc.

The device provides also a yielding and resilient abutment for the toggle constituting a part of the device.

Various modifications may be made in the device embodying my invention without departing from the spirit and scope thereof, and I desire, therefore, that only such limitations shall be placed thereon as are imposed by the prior art or are set forth in the appended claims.

I claim as my invention:

1. The combination with a valve casing and a valve stem, of a spacer having a shouldered end portion adapted to fit against the valve casing, a clamping nut fitting over the shouldered spacer and engaging the casing, a base plate secured against the spacer, two opposed and spaced magnet-coil casings, each having a bottom edge secured to a side portion of the base plate, a magnet coil in

each of said magnet-coil casings, armatures in said magnet coils, and means operatively connecting the armatures and a valve stem, said means including a toggle and a yielding abutment therefor.

2. The combination with a valve casing and a valve stem therein, of a base plate secured to said valve casing, a side plate secured to the base plate at one edge portion, a magnet-coil casing, a magnet coil therein, a movable core structure, a toggle connection between the valve stem and the movable core structure, and means for supporting the magnet-coil casing and the toggle on said side plate.

3. Electromagnetic actuating means for a valve embodying a valve casing and a valve stem, said actuating means including a pair of axially aligned oppositely-extending members of cup shape, a coil in each of said members of cup shape, tubular metal members within the respective coils having a substantially air-tight connection at one end thereof with the members of cup shape, a movable armature structure embodying coaxially aligned spaced core members movable in said tubular metal members and having a substantially air-tight fit therein and a connection between the valve stem and the movable armature structure including a resiliently and pivotally mounted toggle.

4. Electromagnetic actuating means for a valve embodying a valve casing and a valve stem, said actuating means including a pair of spaced coaxially-aligned armature cores movable in a direction at right angles to the direction of movement of the valve stem, a toggle having its mid-pivot point pivotally connected to the armature cores, pivotally mounted bars having their respective outer ends pivotally connected to the outer parts of the toggle members, and a pair of coaxially aligned spaced magnet coils and cover members for said armature cores.

5. Electromagnetic actuating means for a valve embodying a valve casing and a valve stem, said actuating means including a pair of symmetrically spaced coaxially aligned magnet coils and casings therefor, an armature structure movable in said magnet coils in a direction at right angles to the movement of the valve stem, said armature structure embodying two spaced coaxially-aligned magnetic-core members of unequal lengths and a non-magnetic bar connecting the two core members, a toggle having its mid pivot point pivotally connected to the non-magnetic bar, a pivotally mounted link having its outer end pivotally connected to the outer end of one of the toggle members, a second pivotally mounted link having a pivotal connection intermediate its ends with the outer end of the other toggle member, spring members operatively connected to the outer ends of said toggle members, and another spring member operatively connected to the outer end of the second link.

6. Actuating means for a valve having a casing and a valve stem, said means including a base plate secured to the casing and having two spaced ribs on its outer face, a pair of magnetic magnet-coil-receiving members of cup shape each having a peripheral flange at the open end thereof secured to the respective ribs on the base plate to locate the members of cup shape in spaced opposed coaxially-aligned positions, closure plates for each of said members of cup shape secured against the respective flanges and each having a lug on its outer face, links pivotally mounted on said lugs, a toggle having the outer ends of its arms pivotally connected to the outer parts of the pivotally mounted links, magnet coils in said members of cup shape, a core structure movable without said magnet coils and operatively connected to the mid point of the toggle joint and a link member connecting the valve stem and one of the outer ends of the toggle joint.

7. Actuating means for a valve having a casing and a valve stem, said means including a pair of spaced coaxially aligned magnet coils, an armature core structure movable relatively to the magnet coils in a direction substantially at right angles to the direction of movement of the valve stem, a toggle having its mid pivot point loosely operatively connected to the armature core structure and having one end operatively connected to the valve stem, a bar pivotally mounted at one of its ends and having a mid-point thereof constituting an abutment for the other end of the toggle, and a compression spring operatively associated with the other end of the pivotally mounted bar to maintain a predetermined pressure on the valve stem when the valve is closed.

8. Actuating means for a valve having a casing and a valve stem, said means including a pair of coaxially aligned opposed magnet-coil-casings, each of substantially cup shape, a pole piece in each of said magnet-coil casings, tubular members each having one end fitting over a pole piece and coaxially aligned, magnet coils in said magnet-coil casings around said tubular members, an armature core structure reciprocally movable in said tubular members, one only of said tubular members being of magnetic material, and a toggle operatively connecting the valve stem and the armature core structure.

9. Actuating means for a valve embodying a valve casing and a valve stem, said actuating means including a casing of substantially cup-shape, a side plate closing the casing of cup-shape and having a plurality of spaced lugs thereon, bars pivotally mounted at one end of said lugs, a pair of toggle arms pivotally connected to said bars, a link for connecting the toggle to a valve

stem, a coil and a core in the casing of cup-shape and means operatively connecting the core to the toggle arms.

10. A device as set forth in claim 9 in which the outer ends of the toggle arms are connected by a tension spring.

11. A device as set forth in claim 9 in which one of said pivotally mounted bars is yieldingly held in a predetermined position.

12. A device as set forth in claim 9 in which one of said pivotally mounted bars extends beyond its point of connection with a toggle arm and the overhanging end thereof is yieldingly operatively engaged by a compression spring.

13. A device as set forth in claim 4 in which a side plate closes the open end of one of said cover members and has lugs thereon to which the inner ends of said bars are connected.

14. A device as set forth in claim 4 in which one of said pivotally mounted bars is operatively engaged by a compression spring to effect a predetermined pressure on a valve stem when the valve is closed.

In testimony whereof, I have hereunto subscribed my name this 12th day of August, 1929.

CHARLES H. HODGKINS.