Feb. 28, 1961 R. G. KURTZ 2,973,054

GAS CLEANING UNIT

Filed Feb. 15, 1956

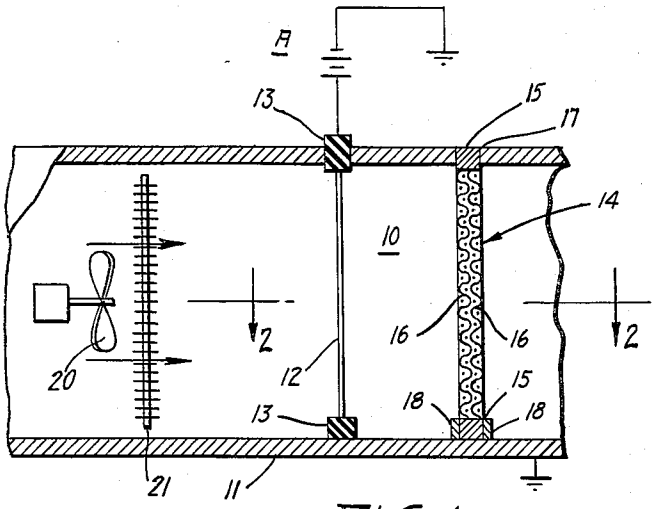


FIG. 1.

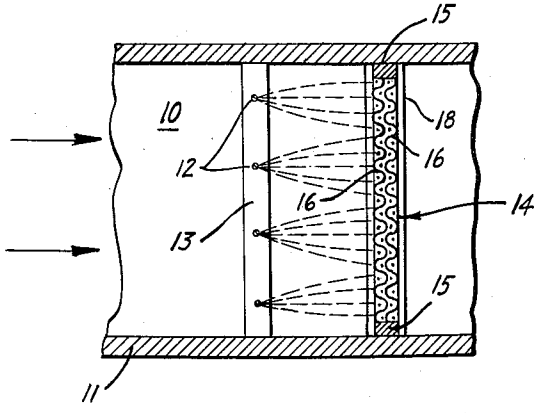


FIG. 2.

INVENTOR.
ROBERT G. KURTZ

BY

Carl H. Lynnestvedt
AGENT

United States Patent Office 2,973,054 Patented Feb. 28, 1961



2,973,054

# GAS CLEANING UNIT

Robert G. Kurtz, Philadelphia, Pa., assignor to Philco Corporation, Philadelphia, Pa., a corporation of Pennsylvania

Filed Feb. 15, 1956, Ser. No. 565,601

4 Claims. (Cl. 183—7)

This invention relates to electrostatic precipitators for the removal of foreign particles from fluids, and more particularly to electrostatic precipitators for the removal of smoke and dust from air.

An object of the invention is to provide an improved electrostatic gas cleaning unit requiring a minimum of attention and maintenance.

It is another object of this invention to provide an electrostatic precipitator having improved particle charging and collection efficiency.

A particular feature of this invention lies in the provision of apparatus for ensuring effective collection of air borne particles in a minimum of space.

It is another feature of this invention that there is derived an improved efficiency in the operation of commercially available filters of known design.

In the achievement of the foregoing objectives and in a preferred embodiment of the invention there is provided—in conduit means adapted for the flow of gas therethrough—electrostatic gas cleaning apparatus including, successively and in the direction of gas flow, a discharge electrode and a collector electrode, said collector electrode comprising an electrically conductive viscous filter, of a kind commonly used as a simple impingement filter. In particular accordance with the present invention the filter is disposed sufficiently close to the discharge electrode to accommodate the creation of a strong ionizing field therebetween, particle-ionization taking place in a field extending from the discharge electrode to the filter, in the direction of gas flow. It is a feature of the invention that the filter which comprises the collector electrode may advantageously have a tacky or viscous coating applied thereto, thereby resulting in a relatively high degree of localization of particle collection in or adjacent the filter. Due to this localization, cleaning, or other general maintenance, may be carried out with ease.

The manner in which the foregoing and other features and advantages of this invention may best be achieved will be more clearly understood from a consideration of the following description, taken in conjunction with the accompanying drawing in which:

Figure 1 is a view, primarily in section, of structure housing a preferred form of precipitator, suitable electrical equipment being shown diagrammatically; and

Figure 2 is a horizontal sectional view taken in the direction of line 2—2 applied to Figure 1.

Now making more detailed reference to the drawing, there is shown in the figures an electrostatic precipitator 10 suitably disposed in a gas-flow duct 11 of known design, for example an air duct of a window-mounted room air conditioner of the type including a fan 20 and a finned cooling coil 21. The precipitator, with which this invention is particularly concerned, comprises discharging electrodes 12 mounted in suitable frames 13 which may be either of an electrically insulating material, or of an electrically conductive material insulated by known suitable means (not shown) from the duct



means 11, said frame, including the discharge electrodes 12, being disposed transverse the duct 11.

Electrode material having particular utility in the disclosed apparatus includes parallelly disposed tensioned lengths of 2½ mil tungsten wire capable of being maintained, by means to be hereinafter more fully described, at a potential of 10 kv., with respect to ground, or such other value as may be found suitable for maintaining corona discharge in the presence of air-borne particulate matter. The duct in this instance is maintained at ground potential with respect to the electrical energizing means, which may be of any type suitable to the operating requirements. A preferred arrangement provides a unidirectional current supply to discharge electrodes 12, the necessary potential for effecting the corona discharge for creating the ionizing field of the electrostatic precipitator with which this invention is concerned being supplied by means shown at A, and impressed across the electrodes 12 and a collector electrode 14 disposed adjacent the aforesaid discharge electrodes in the path of gas flow. Said collector electrode is maintained at ground potential. The collector electrode comprises an air filter, preferably a viscous impingement type filter, which includes suitable framing means 15 upon which there are mounted wire screens 16, or other suitable materials, for example screens constructed of "expanded" or perforated sheet metal, that allow free passage of the gas, the flow of which is indicated by arrows pointing from left to right. The wire of screens 16 is coated with petroleum jelly or other suitable material associated with this type of filter; although but two screens are shown, it is to be understood that as many such screen layers may be used as are desirable. While the relative positioning of the electrode elements 12 and 14 as respects the direction of gas flow has been hereinabove described and is illustrated in the drawing in accordance with principles of the invention, it will be understood that the precise electrode spacing will of course vary with different apparatus, the important requirement being that the spacing is sufficiently close to insure that a combined ionizing and collecting field is established between the electrode elements, in the direction of gas flow, as indicated in broken lines in Figure 2.

It will be recognized that dust or other foreign particles brought into contact with such material tend to adhere thereto. A variety of such materials are available, being known in the art as "viscous" materials.

Inasmuch as it is contemplated that the collector electrode be of the removable type, there is provided a slot 17 adapted for insertion or removal of the electrode for reasons to be hereinafter more fully described.

Adapted to receive the lower edge of the electrode 14 are metal retainer strips 18, which may be formed separately or as integral portions of duct 11. A viscous impingement type filter found particularly useful as the collector electrode is commercially available, and is known as the E Z Kleen air filter, which comprises a plurality of parallelly disposed expanded-metal screens of sheet aluminum. Inasmuch as both the screen and frame of this filter are constructed of metal, the necessary electrical contact is derived through the physical contact of the frame 15 with either the duct 11 or retaining strips 18; should a frame of insulating material be utilized, it is to be understood that other known suitable means may be employed to provide the desired electrical contact of the screen with the duct.

In operation, the gas entrained dust and smoke particles entering the inlet, or left, end of the duct 11 are ionized as they pass between the discharge electrodes 12 and continue toward the collector electrode, or filter, 14. In the course of flow in this region, the particles are given positive electrostatic charges inasmuch as a series

of fan-shaped ionizing fields (see broken lines, Fig. 2) extend from the discharge electrodes **12** toward the wire screens **16** of the viscous impingement filter **14**, and in the direction of air flow. The positively charged particles then deposit upon the negatively charged viscous impingement filter **14**, the latter being the collector electrode.

When the filter becomes loaded with particles, it can be slidably removed through the slot **17** in the duct **11**, washed free of foreign particles and ciscous material, followed by application of a new film of viscous material and subsequent replacement of the filter into the duct.

It is to be appreciated that the foregoing structure not only minimizes the number of electrodes required, but also provides for distribution of the electrostatic field in such manner that the lines of force (Figure 2) extend in the direction of gas flow and so reinforce each other in effecting precipitation of the particles upon the precipitating electrode. In providing a precipitating electrode comprising a metallic, viscous impingement filter there is assured, in accordance with the principles of this invention, substantially uniform distribution of the electrostatic particle-charging field between the relatively small discharge electrode wires and the larger surface of the precipitating electrode screen, thereby enhancing intimate contact, and subsequent adherence of the charged dust particles with the viscous material on the surface of the precipitating electrode.

It is contemplated in the broader aspect of this invention, that elements of the precipitator may be mounted in suitable framing structure adapted for installation, as a unit, in existing duct work conduit means.

I claim:

1. In combination with air conditioning equipment including means for causing air to traverse a predetermined path, apparatus for electrostatically removing smoke and dust particles from said air, said apparatus comprising: electrode means adapted to provide for corona discharge therefrom and consisting of a plurality of electrode elements spaced one from the other and disposed in a plane extending transverse said path; a single stage collector electrode consisting of a generally planar screen member of electrically conductive material extending parallel to the plane of, and disposed closely adjacent the downstream side of said electrode elements; means for electrically insulating said electrode elements from said collector electrode; and means operative to impress an ionizing potential across said discharge electrode means and said collector electrode to create corona discharge about elements of the former in the presence of said particles thereby to create a combined particle ionizing and collecting field therebetween, said field consisting of a plurality of adjacent fan-shaped fields each extending from an electrode element to said collector electrode.



2. In apparatus through which may flow a stream of gas containing suspended particles to be removed, means for creating a combined particle ionizing and collecting field extending substantially entirely in the direction of gas flow, comprising: discharge electrode means consisting of a plurality of electrode elements spaced one from the other and disposed in a plane extending transverse said path; a collector electrode consisting of a substantially planar member of electrically conductive material extending parallel to the plane of and disposed closely adjacent the downstream side of said electrode elements; means for electrically insulating said electrode elements from said collector electrode; and means operative to impress an ionizing potential across said discharge electrode means and said collector electrode to create a corona discharge about the former in the presence of said particles thereby to create said combined particle ionizing and collecting field, said field consisting of a plurality of adjacent fan-shaped fields each extending from an electrode element to said collector electrode in the direction of gas flow.

3. Apparatus in accordance with claim 2, wherein said electrode elements consist of parallelly disposed, tensioned lengths of fine tungsten wire.

4. Apparatus in accordance with claim 3 and further characterized in that said electrode elements are maintained at a potential of about 10 kv. with respect to said collector electrode.

**References Cited** in the file of this patent

UNITED STATES PATENTS

| | | |
|---|---|---|
| 2,343,338 | Steel | Mar. 7, 1944 |
| 2,388,933 | Pearson | Nov. 13, 1945 |
| 2,579,441 | Palmer | Dec. 18, 1951 |
| 2,585,799 | Lawrence | Feb. 12, 1952 |
| 2,595,342 | Dosmann | May 6, 1952 |
| 2,701,621 | Sprague | Feb. 8, 1955 |
| 2,822,058 | Roos et al. | Feb. 4, 1958 |

FOREIGN PATENTS

| | | |
|---|---|---|
| 816,463 | France | May 3, 1937 |
| 701,975 | Great Britain | Jan. 6, 1954 |