April 25, 1967 J. L. GROVE 3,315,821

FOUR-SECTION FULLY HYDRAULICALLY OPERATED BOOM

Filed March 15, 1966 2 Sheets-Sheet 1

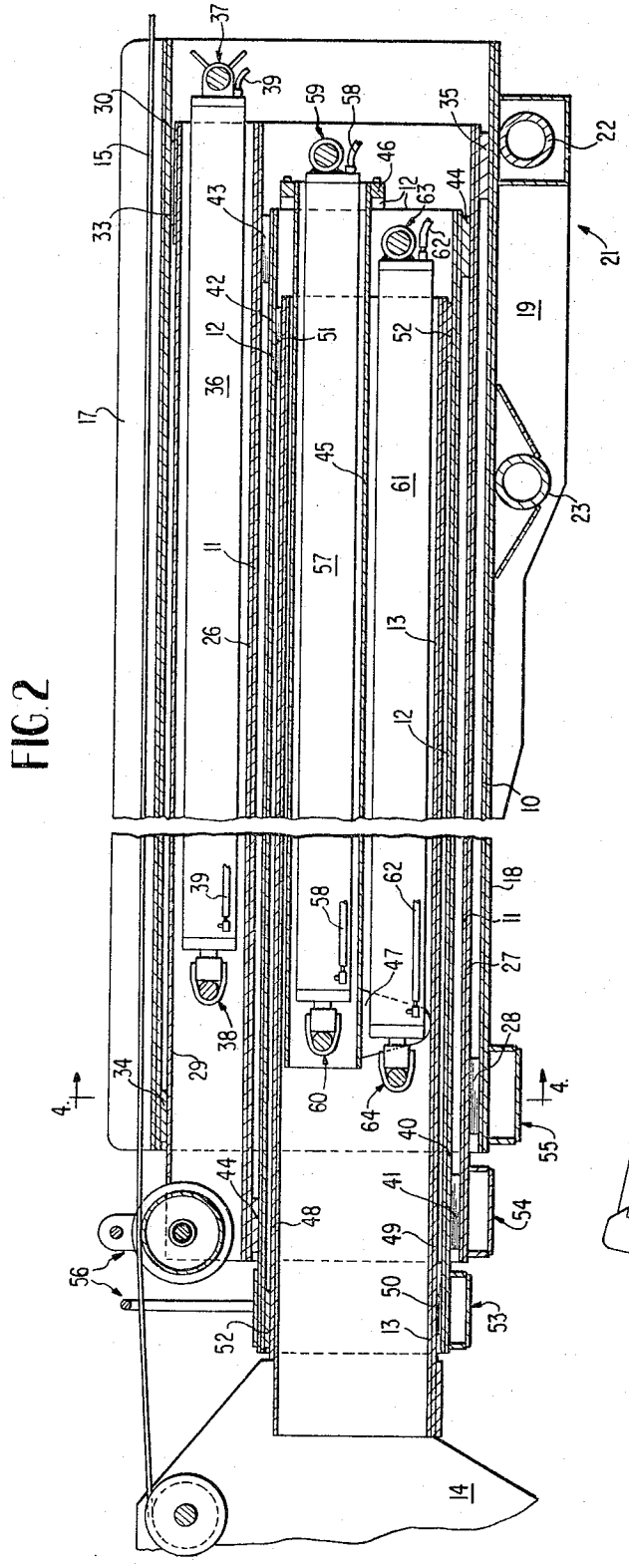

FIG. 2

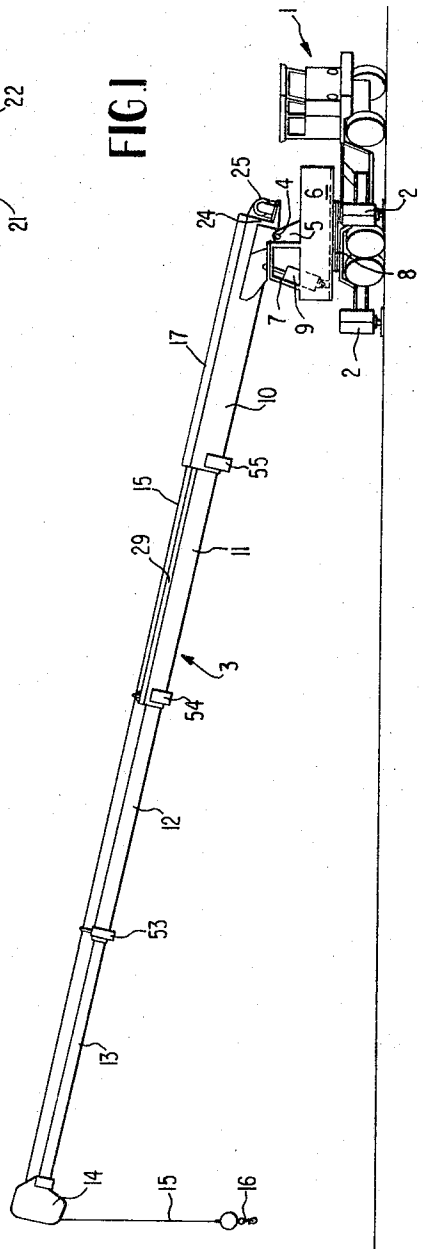

FIG. 1

INVENTOR
JOHN L. GROVE
BY Rupert J. Brady
ATTORNEY

April 25, 1967 J. L. GROVE 3,315,821

FOUR-SECTION FULLY HYDRAULICALLY OPERATED BOOM

Filed March 15, 1966 2 Sheets-Sheet 2

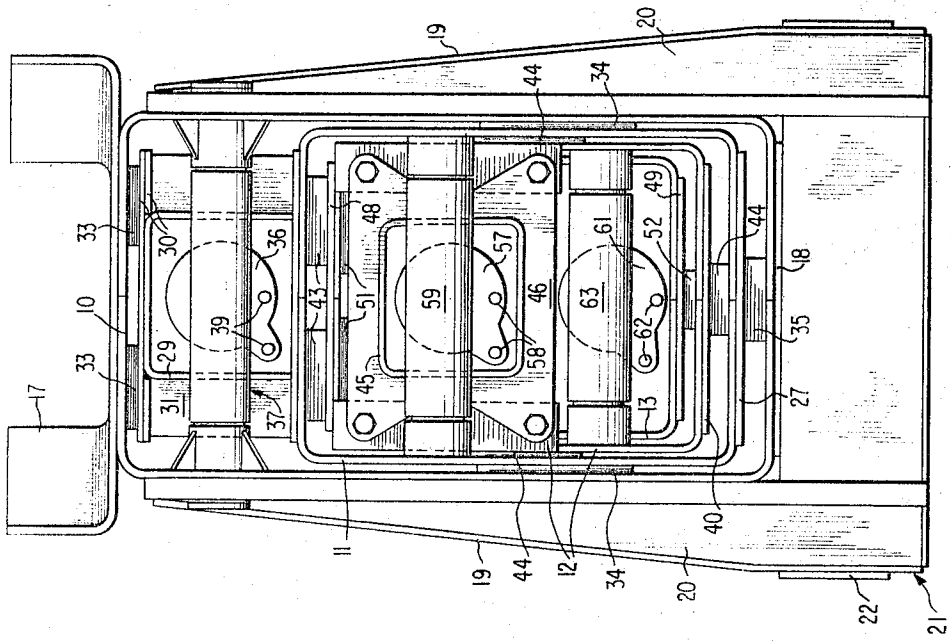

FIG.3

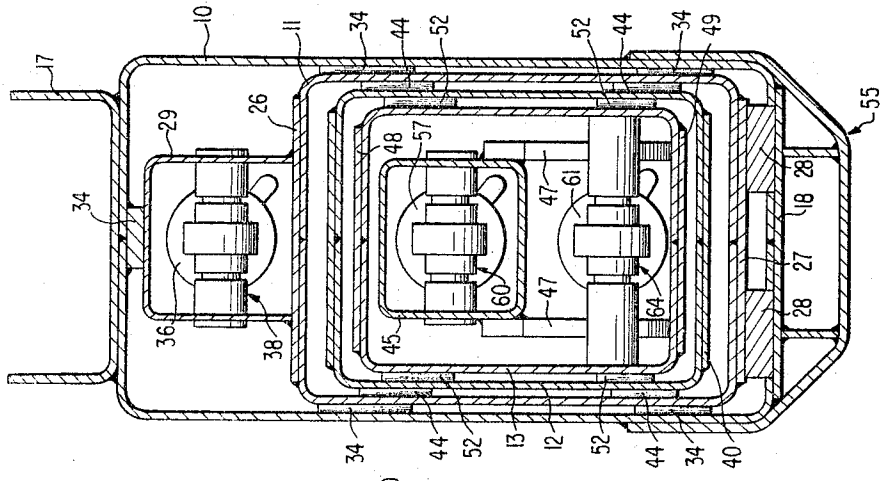

FIG.4

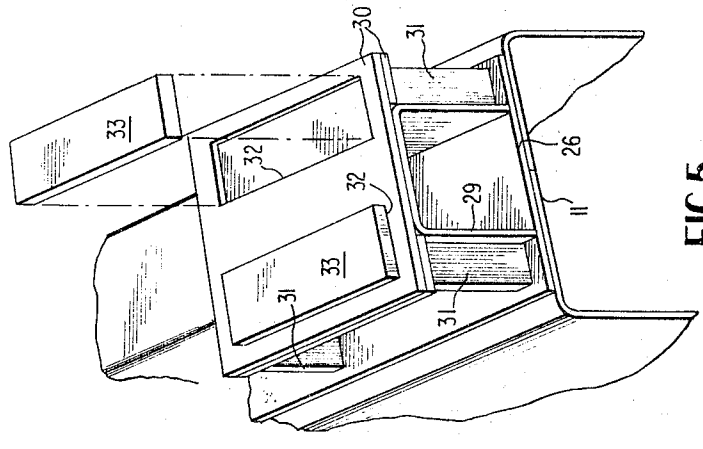

FIG.5

INVENTOR

JOHN L. GROVE

BY Rupert J. Brady

ATTORNEY

United States Patent Office 3,315,821
Patented Apr. 25, 1967

3,315,821

FOUR-SECTION FULLY HYDRAULICALLY OPERATED BOOM

John L. Grove, Greencastle, Pa., assignor to Grove Manufacturing Co., Shady Grove, Pa., a corporation of Pennsylvania

Filed Mar. 15, 1966, Ser. No. 534,538
9 Claims. (Cl. 212—55)

This application is a continuation-in-part of my copending application Ser. No. 446,602, filed Apr. 8, 1965, for Telescopic Crane Boom With Longitudinally Extending Cylinder Connector, now Patent 3,243,052.

This invention relates broadly to telescopic crane booms and more particularly to a four-section fully hydraulically extendable and retractable, heavy duty, telescopic crane boom.

The telescopic crane boom of the present invention is preferably intended for use on a vehicle body to provide a heavy duty mobile hydraulic crane, but it is to be understood that the boom structure may also be used in stationary installations. Most telescopic boom structures having at least four extending telescopic sections, heretofore known in the art, have utilized a cable and pulley mechanism connected between the various sections for extending and retracting the various sections. However, this type of extending mechanism is not practical in heavy duty telescopic booms having load capacities of 25 tons, 40 tons, or greater, and the use of fluid motors or rams has been found to be the most efficient and practical means for extending and retracting telescopic boom sections relative to each other in such heavy duty boom structures. But the use of fluid motors also presents problems as it is difficult to connect fluid motors between adjacent sections of a multiple telescopic section heavy duty boom and at the same time maintain only a slight variance in the cross-section size between adjacent boom sections so that the outermost or fly section has sufficient strength for the load capacity and the base section is not unduly large and heavy. Because of these problems, the largest telescopic hydraulic crane boom heretofore known in the art has been a four-section boom in which two of the sections are hydraulically extendible from the base section, and the fourth of fly section is manually extendible. The art has never known a four-section fully hydraulically extendable and retractable crane boom and it is therefore the main object of this invention to provide such a construction.

Another object of the invention is to provide a construction of self-contained four-section telescopic boom in which all sections are individually selectively hydraulically extendable such that the boom can be extended to its full length of approximately eighty feet in a few minutes.

A further object of the invention is to provide a construction of four-section fully hydraulically extendable boom having a gradual reduction in the cross-section modulus of successive boom sections while maintaining the vertical depth of the base section at a minimum.

Other and further objects of the invention reside in the versatility and flexibility provided by a fully hydraulically extendable four-section crane boom, and other objects will become apparent to one skilled in the art from the specification hereinafter following by reference to the accompanying drawings, in which:

FIG. 1 is a perspective view of a mobile hydraulic crane showing the four-section boom of the invention fully extended;

FIG. 2 is an enlarged, foreshortened, longitudinal sectional view of the boom showing the manner in which the fluid motors are connected between the boom sections;

FIG. 3 is an enlarged end elevational view of the inner end of the boom of FIG. 2;

FIG. 4 is an enlarged cross-sectional view taken substantially along line 4—4 of FIG. 2; and

FIG. 5 is an enlarged fragmentary perspective view of the top inner end portion of the boom inner mid-section.

The four-section fully hydraulically extendible boom of the invention is shown in FIG. 1 mounted on a vehicle generally indicated at 1 to form a mobile hydraulic crane adapted for travel over roads or rough terrain. The vehicle is equipped with hydraulically extendible outriggers 2 for stabilizing the vehicle frame on the supporting surface and for removing the load from the vehicle wheels when the crane is set up for operation.

The boom 3 is pivotally mounted at 4 to a pair of boom supports 5 on housing 6 which includes an operator's cab 7 and the hydraulic control system for the boom. A pair of boom lift fluid motors 9 are pivotally connected between the boom assembly and housing 6 for selectively raising and lowering the boom assembly 3. The housing and cab 6 and 7 are pivotally connected to the vehicle 1 in the usual manner through a turntable 8, operable from the operator's cab, which enables the boom assembly to be continuously rotated through 360°. Although the boom assembly has been shown mounted on a mobile vehicle it is to be understood that it can also be mounted on other apparatus.

Also, while members 9, as well as the extending members in boom assembly 3, are referred to as fluid motors, it is to be understood that they may also comprise other type motor operated linearly extending means, although they are preferably hydraulically operated fluid motors.

The boom assembly of the invention includes a base section 10, an inner mid-section 11 telescopically disposed within base section 10, an outer mid-section 12 telescopically disposed within inner mid-section 11, and a fly section 13 telescopically disposed within outer mid-section 12. A boom nose assembly 14 of conventional form is connected to the outer end of fly section 13 and includes pulleys (not shown) for control of the hoist cable 15 and hook assembly 16 connected to the end thereof.

Base section 10 is of generally rectangular cross-section, as particularly shown in FIGS. 3 and 4, with an upwardly opening cable guide channel 17 on the upper surface thereof and substantially coextensive therewith for hoist cable 15. As indicated in FIG. 3, the sides of guide channel 17 converge somewhat inwardly toward each other toward the forward end of the base section so as to provide a tapered channel guide for the cable.

The bottom of base section 10 is provided with a reinforcing base plate 18 coextensive with the base section. The inner end of the base section is provided with reinforcing side plates 19 connected thereto by welds and gusset plates 20 to form a reinforcing box section, indicated generally at 21, beneath the end of the base section which supports the transversely extending boom pivot bushing 22 which forms the pivot connection 4 between the boom assembly and the boom supports 5, and lift cylinder bushing 23 which provides a pivot connection with the pair of lift fluid motors 9 so that the bottom assembly can be raised and lowered in the vertical plane. As indicated in FIG. 1, a platform 24 is connected to the inner end of base section 10 for supporting a hydraulically powered winch 25 which stores and controls hoist cable 15.

Inner mid-section 11 of the boom assembly is generally rectangular in cross-section and is provided with top and bottom reinforcing plates 26 and 27, respectively, coextensive with the length thereof, with bottom reinforcing plate 27 providing a bearing surface for a pair of bearing pads 28, constructed of brass or other relatively soft bearing material, connected to base section 10 adjacent its outer end as indicated in FIGS. 2 and 4. The pair of

bearing pads 28 extend somewhat above the lower inner surface of the base section into sliding contact with bottom reinforcing plate 27 of inner mid-section 11.

Upper housing 29, substantially comprising an inverted channel member, is securely connected by welding or the like to the top surface of inner mid-section 11, that is the top surface of reinforcing plate 26 so that the housing is an integral part of the inner mid-section and telescopes within the base section since the overall height of the inner mid-section 11, including housing 29, is slightly less than the height of base section 10. Housing 29 is substantially co-extensive with inner mid-section 11, as indicated in FIG. 2, and is provided adjacent its inner end with a reinforcing assembly 30 secured to the top surface thereof, by welding or the like, which provides a pair of cutouts 32 herein in which a pair of upper bearing pads 33 are frictionally disposed to slidably engage the inner top surface of base section 10 as the inner mid-section is reciprocated therein. Assembly 30 is reinforced by gussets 31 or the like, and this assembly enables bearing pads 33 to be positioned as closely as possible to the upper corners of the base section. Bearing shim plates 34, constructed of brass or the like, are connected to the top and side inner surfaces of the base section, at appropriate places, as indicated to eliminate slack movement between the base section and the inner mid-section during relative movement of the sections. A similar shim 35 is connected to the lower surface of inner mid-section 11 adjacent its inner end for the same purpose.

A hydraulically actuated fluid motor 36 is positioned within housing 29 with the cylinder of the fluid motor pivotally connected at 37 to the inner end of the base section 10 and the piston rod end of the fluid motor pivotally connected at 38 to upper housing 29 of inner mid-section 11, adjacent the outer end threof. The hydraulic lines 39 from opposite ends of the fluid motor extend from the rear of the boom assembly and to the hydraulic control system within housing 6 and cab 7. When hydraulic fluid is introduced into the fluid motor through the line connected to the inner end thereof the piston rod is extended from the cylinder and inner mid-section is telescopically extended from the base section. When hydraulic fluid is introduced into the fluid motor through line 39 on the outer end thereof inner mid-section 11 is retracted into base section 10.

Outer mid-section 12 of the boom is of hollow rectangular cross-section having length and width dimensions slightly less than the inner dimensions of the lower portion of inner mid-section 11. A reinforcing plate 40 is provided on the lower surface of the outer mid-section to form a bearing surface substantially coextensive thereof disposed in sliding contact with a pair of bearing pads 41 connected to inner mid-section 11 adjacent its outer lower end in the same manner pads 28 are connected to the base section. Outer mid-section 12 is provided with an upper reinforcing plate 42 substantially coextensive therewith which is provided adjacent its inner end with a pair of cutouts similar to those indicated at 32 which carry a pair of upper bearing pads 43 disposed in sliding engagement with the upper interior surface of inner mid-section 11, as indicated in FIGS. 2 and 3. Bearing shim pads 44, similar to shim pads 34, are appropriately connected between the sides, tops and bottoms of outer mid-section 12 and inner mid-section 11 to eliminate slack movement between the sections and to provide a smooth telescoping action.

A generally square cross-section core or fluid motor enclosing housing 45 is rigidly connected within outer mid-section 12 in spaced relation with the inner surfaces thereof by means of flange plate 46, or the like, welded thereto and rigidly bolted to the inner end of the outer mid-section. Core 45 and outer mid-section 12 are thus rigidly connected together as a unit at their inner ends and the core extends longitudinally of said section with its outer free end terminating adjacent the

outer end of outer mid-section 12, as indicated in FIG. 2. A pair of support skids 47 are connected to the outer free end of core 45 and extend downwardly into sliding contact with the inner bottom surface of telescopic fly section 13 telescopically disposed within outer mid-section 12 and disposed about core 45. Fly section 13 is of rectangular cross-section having cross-sectional dimensions which are slightly smaller than the cross-sectional dimensions of outer mid-section 12 and in retracted position telescopes into outer mid-section 12, and around core 45 which is a part of section 12, substantially throughout its length. The fly section is provided with top and bottom reinforcing plates 48 and 49 extending substantially throughout its length with bottom reinforcing plate 49 disposed in sliding engagement with a pair of bearing pads 50 connected adjacent the lower outer end of outer mid-section 12 in substantially the same manner as bearing pads 28 and 41 are connected to their respective sections. A pair of skid plates 51 are connected to the inner end of top reinforcing plate 48 such that when fly section 13 is reciprocated within outer mid-section 12 skid plates 51 slide along the interior top surface of outer mid-section 12 and bearing pads 50 slide along the bottom surface of bottom reinforcing plate 49 of the fly section. As in the other boom sections, a plurality of bearing shim pads 52 are connected at appropriate places between the fly section and outer mid-section, in the same manner as bearing shim pads 44 connected between the respective sections to eliminate slack movement between the sections during relative reciprocating movement.

As shown specifically in FIG. 2, outer mid-section 12, inner mid-section 11, and base section 10 are provided with reinforcing collars 53, 54 and 55, respectively, connected to their outer end portions beneath their respective pairs of bearing pads. Nose boom assembly 14 is connected to the outer end of fly section 13, and the hoist cable 15 from winch 25 extends along the top of boom assembly 3 through channel 17 and appropriate cable guides, such as indicated at 56, to the pulleys in the boom nose assembly.

Fluid motor 57 is disposed within core or fluid motor housing 45, and is provided with hydraulic lines 58 extending from opposite ends of its cylinder, with the cylinder end of the fluid motor pivotally connected at 59 to the inner end of inner mid-section 11, and the piston rod end of the fluid motor pivotally connected at 60 adjacent the free end of core 45. Fluid motor 61 is disposed immediately beneath core 45 and is positioned between the support skids 47, as particularly shown in FIG. 4. Hydraulic lines 62 are connected to opposite ends of the fluid motor with the cylinder end of fluid motor 61 pivotally connected at 63 to the inner end of outer mid-section 12 and the piston rod end of the fluid motor pivotally connected at 64 adjacent the outer end of fly section 13. The cylinders 57 and 61 are thus disposed one above the other with cylinder 57 encased within core 45 and with the fly section disposed in surrounding relation to core 45 and cylinder 61 when the fly section is telescoped into the outer mid-section. In the fully telescoped position of the boom, as shown in FIGS. 2, 3, and 4, the three fluid motors are positioned one above the other.

The hydraulic lines 39, 58 and 62 from the opposite ends of fluid motors 36, 57 and 61 respectively extend out of the inner end of the boom assembly and through hose reel apparatus, not shown, into connection with the hydraulic control system within housing 6 and cab 7. Any one of the fluid motors can be selectively energized at any one time so that any boom section can be selectively extended from the section into which it is telescoped. Likewise, the sections can be individually and selectively retracted or they can all be simultaneously extended and retracted by operating the fluid motor simultaneously. When hydraulic fluid is supplied to fluid

motor **61** through hydraulic lines **62** at the inner end of the fluid motor, fly section **13** is extended from outer mid-section **12**. When hydraulic fluid is supplied to fluid motor **57** through hydraulic line **58** connected to the inner end of the fluid motor, outer mid-section **12** is extended from inner mid-section **11**. Inner mid-section **11** is extended from base section **10** by actuating fluid motor **36** in a similar manner as previously described and the respective sections are telescopically retracted by supplying hydraulic fluid to the respective fluid motors through the hydraulic lines connected to the outer ends of the fluid motors. This provides a very versatile and flexible fully hydraulically extendible and retractable four-section boom which can be extended, for instance, from a length approximately twenty-six feet in the retracted position to a length of approximately eighty feet in the fully extended position in approximately two minutes. This is a drastic reduction in the set-up time, over any comparable size boom, heretofore known in the art which is capable of lifting loads in the range of 25 to 40 tons and greater.

While the invention has been described in certain preferred embodiments, it is realized that modifications can be made without departing from the spirit of the invention, and it is to be understood that no limitations upon the invention are intended other than those imposed by the scope of the appended claims.

What I claim as new and desire to secure by Letters Patent of the United States is as follows:

1. A boom having at least four telescopic extensible sections, comprising, a first section, a second section telescopically disposed in said first section, a third section telescopically disposed in said second section, means extending longitudinally of the interior of said third section and connected at the inner end to the inner end of said third section, a fourth section telescopically disposed substantially throughout its length in said third section, first fluid motor means pivotally connected at opposite ends to said first and second sections for moving said second section lineally relative to said first section, second fluid motor means connected at one end to said second section and at the other end to said means, for moving said third section and said means lineally relative to said second section, third fluid motor means connected at opposite ends to said third and fourth sections for moving said fourth section lineally relative to said third section, and said fourth section disposed in surrounding relation to said means and said third fluid motor means.

2. A boom as set forth in claim **1** in which said first, second and third fluid motor means are connected for selective extension and retraction of said second, third and fourth sections.

3. A boom as set forth in claim **1** in which said first fluid motor means is disposed within said first section and is connected to said second section outwardly of said third section.

4. A boom as set forth in claim **1** in which said means comprises a hollow housing integrally connected interior of said third section, said hollow housing having a free end, and said second fluid motor means disposed within said hollow housing, extending longitudinally thereof, and having one end pivotally connected thereto adjacent the free end.

5. A boom as set forth in claim **4** in which said third fluid motor means is disposed beneath said hollow housing, a pair of skid means connected to the free end of said hollow housing and extending into sliding engagement with said fourth section, and at least a portion of said third fluid motor means extending between said pair of skid means in spaced relation with said hollow housing.

6. A boom as set forth in claim **1** in which said third fluid motor means includes a cylinder portion, and said means and said cylinder disposed substantially alongside each other in spaced relation in the extended and telescoped positions of the boom.

7. A boom as set forth in claim **6** in which said cylinder portion and said means are substantially coextensive with each other in the extended and telescoped positions of the boom.

8. A boom as set forth in claim **6** in which said cylinder portion and said means are disposed in the same position relative to each other in the extended and telescoped positions of the boom.

9. A boom as set forth in claim **1** in which said means and said third fluid motor means extend interior of said fourth section, and said first fluid motor means extends interior of said second section in the retracted position of the boom.

References Cited by the Examiner

UNITED STATES PATENTS

2,668,625	2/1954	Garland	212—55
3,112,035	11/1963	Knight	212—35
3,243,052	3/1966	Grove	212—55

ANDRES H. NIELSEN, *Primary Examiner.*