Junie 4, 1940. D. E. BONNER 2,203,251

MACHINE FOR CLEANSING AND TREATING

Filed May 3, 1939 4 Sheets-Sheet 1

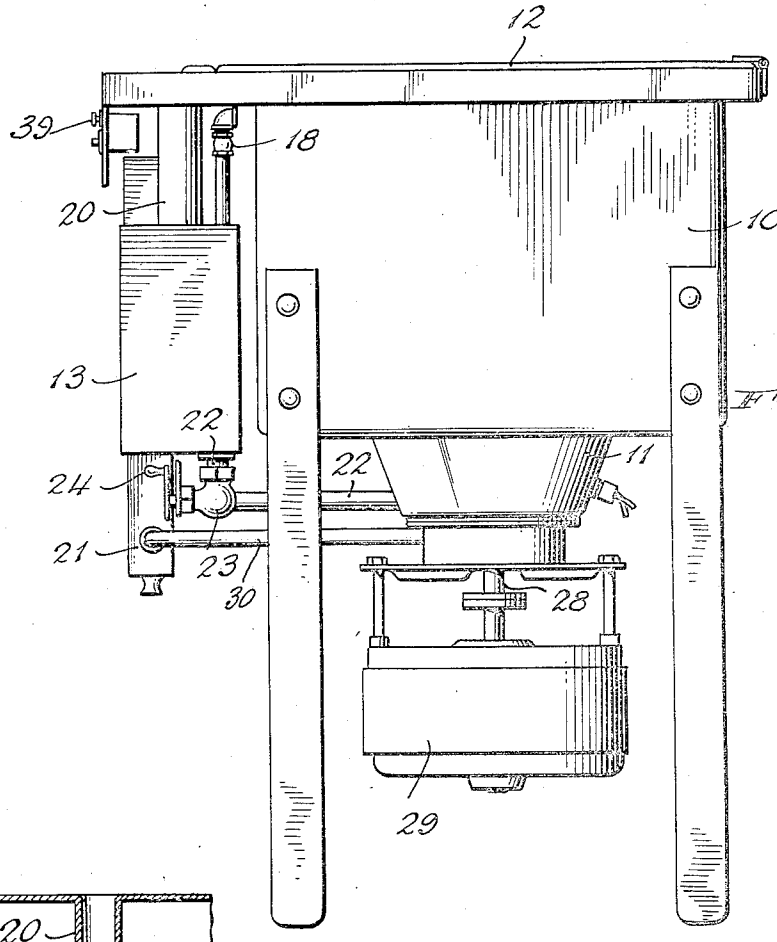

Fig. 1.

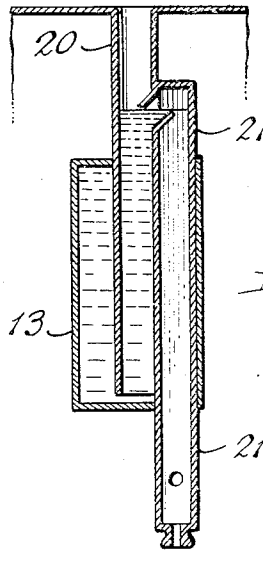

Fig. 6.

INVENTOR.
DOUGLAS E. BONNER
BY
John Arkwright
ATTORNEY

June 4, 1940. D. E. BONNER 2,203,251

MACHINE FOR CLEANSING AND TREATING

Filed May 3, 1939 4 Sheets-Sheet 2

Fig. 2.

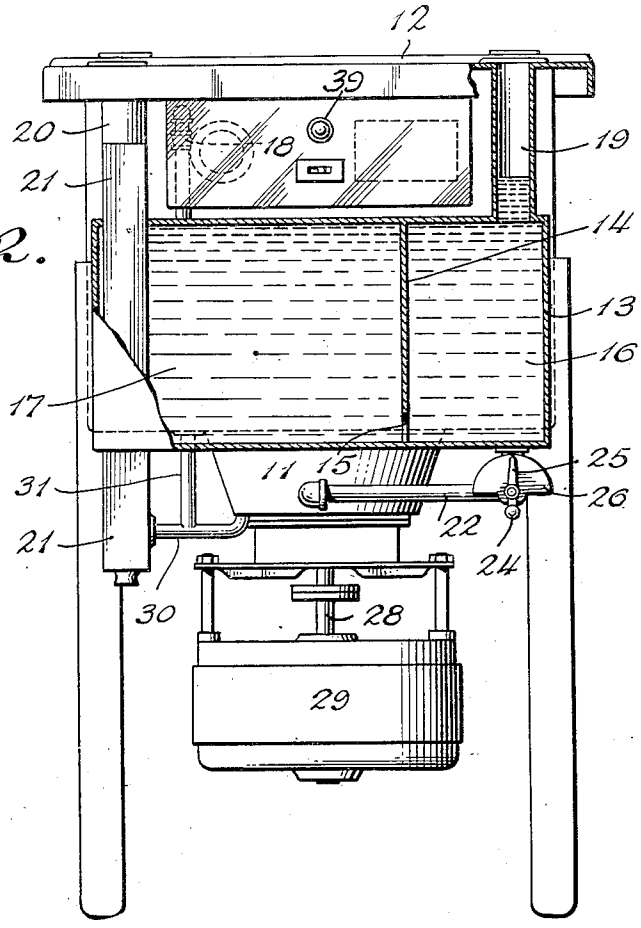

Fig. 7.

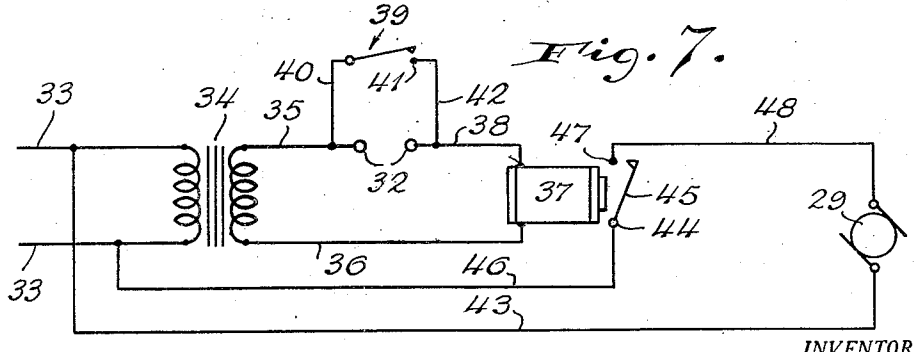

INVENTOR.
DOUGLAS E. BONNER
BY
John A. Ackerman
ATTORNEY

June 4, 1940. D. E. BONNER 2,203,251

MACHINE FOR CLEANSING AND TREATING

Filed May 3, 1939 4 Sheets-Sheet 3

Fig. 3.

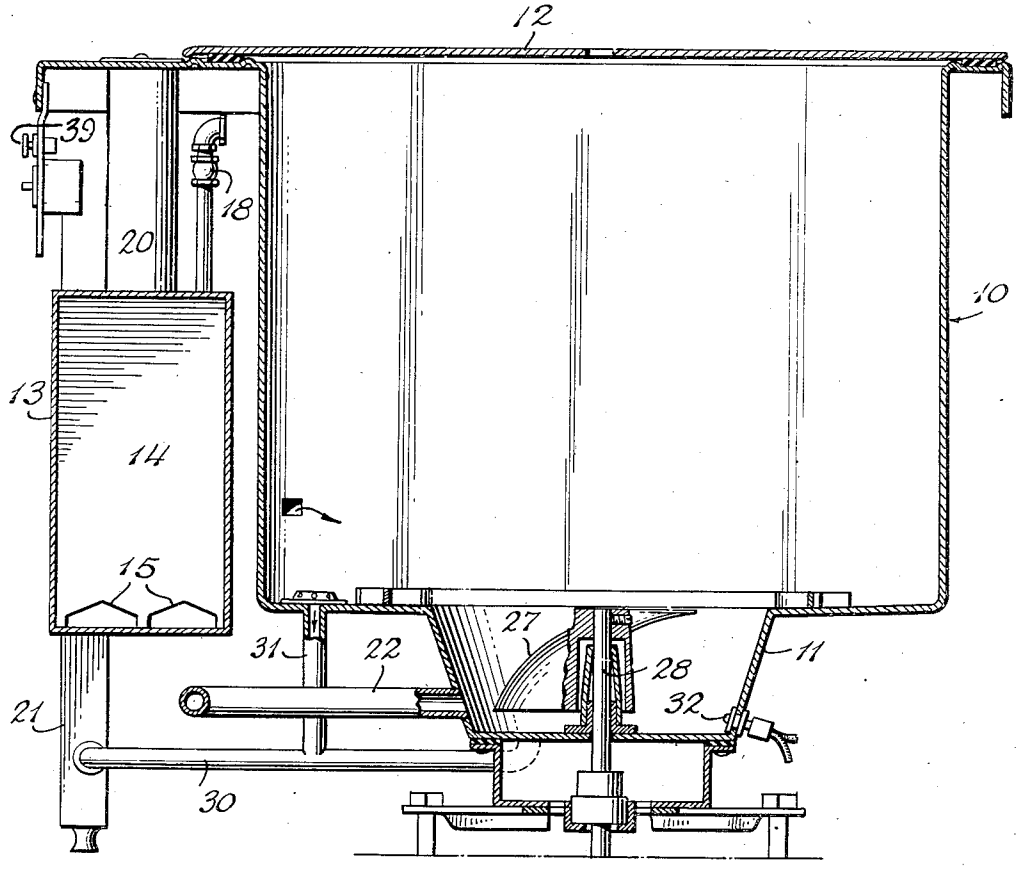

Fig. 8.

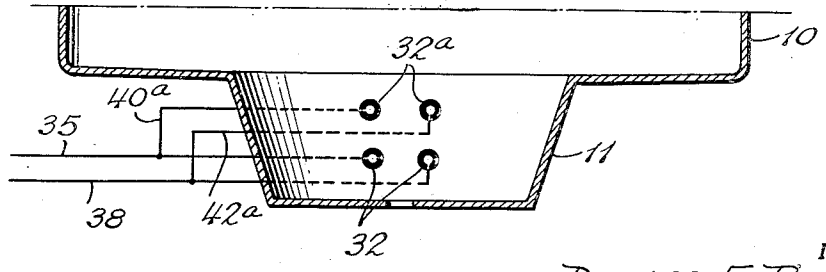

INVENTOR.
DOUGLAS E. BONNER
BY
ATTORNEY

June 4, 1940. D. E. BONNER 2,203,251

MACHINE FOR CLEANSING AND TREATING

Filed May 3, 1939 4 Sheets-Sheet 4

Fig. 4.

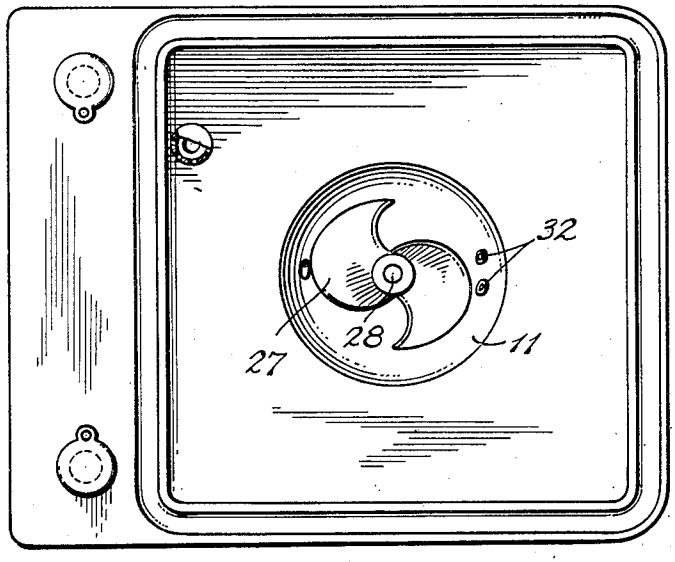

Fig. 5.

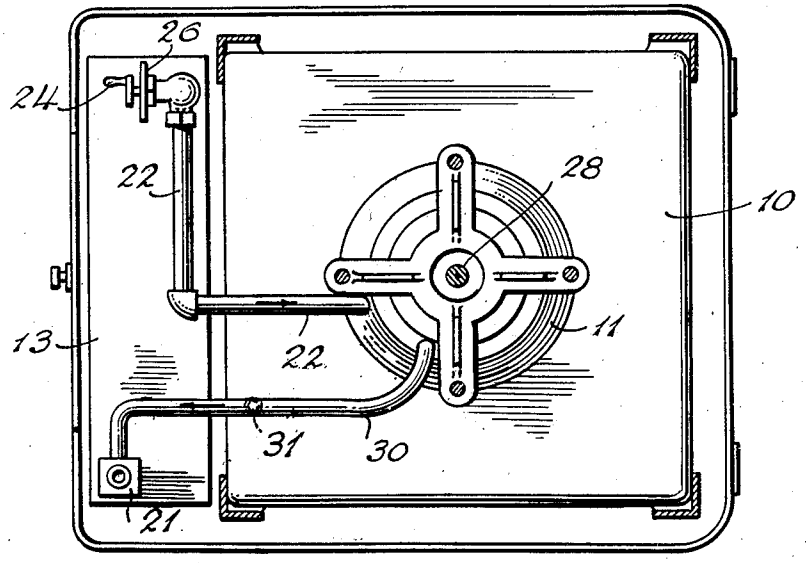

INVENTOR.
DOUGLAS E. BONNER
BY
ATTORNEY

Patented June 4, 1940

2,203,251

UNITED STATES PATENT OFFICE

2,203,251

MACHINE FOR CLEANSING AND TREATING

Douglas E. Bonner, New York, N. Y.

Application May 3, 1939, Serial No. 271,487

9 Claims. (Cl. 141—9)

My invention relates to cleansing and treating machines and has for its object to provide a machine of simple construction whereby articles such as dishes in domestic, hotel or restaurant use, or articles of metal or other materials in industrial use or in the process of manufacture, may be washed or otherwise treated with liquids in a variety of operations in a reliable and efficient manner and entirely under automatic control after having been started. My invention contemplates further the provision of an electrical control means arranged and operating in a novel manner to control the function of given means such as for instance the operation of an electric motor as embodied in the aforesaid novel machine. Other specific objects will appear from the description hereinafter, and the features of novelty will be pointed out in the claims.

The instant application is a continuation-in-part of another application filed by me in the United States Patent Office on September 16, 1931, Serial No. 563,029, which has matured into Patent No. 2,157,112, dated May 9, 1939.

In the accompanying drawings, which illustrate examples of the invention, without defining its limits, Fig. 1 is an elevation of the novel machine; Fig. 2 is a similar view, partly in section, looking at right angles to Fig. 1; Fig. 3 is a detail sectional view of the machine on an enlarged scale; Fig. 4 is a plan view of the machine showing the interior thereof; Fig. 5 is an inverted plan view with parts in section; Fig. 6 is a fragmentary section showing an overflow arrangement; Fig. 7 is a diagram showing an arrangement of electric circuits for the novel electrical controlling means, and Fig. 8 is a sectional view showing a part of the machine to illustrate another arrangement of the electrical controlling means.

While the illustrated example of the novel machine with its associated novel features, for purposes of explanation and description, is shown in a form intended primarily for washing dishes, silverware, etc., in domestic use, it is to be understood that this is not to be construed as a limitation as obviously the machine and said associated features are capable of being adapted for many other uses without in any way departing from the spirit of the invention.

As shown in the drawings, the machine comprises a tank 10 having a sump 11 at its bottom preferably constituting an integral part thereof. At its upper end the tank 10 is normally open and arranged to be closed during the operation of the machine by means of a hinged cover 12, suitable provision being made to releasably lock said cover 12 in its closed position.

The machine further includes a reservoir 13 located exteriorly of the tank 10 and divided interiorly into a plurality of compartments by means of one or more partitions 14 provided in their lower portions with one or more openings 15 whereby communication between adjacent compartments is established, as will be more fully pointed out hereinafter; the illustrated example shows the reservoir 13 provided with a single partition 14, whereby said reservoir is divided into a chamber or compartment 16 arranged to contain the washing liquid or its equivalent and a chamber or compartment 17 adapted to contain a rinsing or other cooperating liquid, depending upon the functions which are being performed by the machine. The reservoir 13 is further provided with a check valve 18 in communication with the chamber 17 so arranged that air will pass freely out of said chamber but will be prevented from passing into the same. The reservoir is also provided with inlet tubes 19 and 20 leading respectively to the chambers 16 and 17 and having their upper ends open. The inlet tube 20 communicates at a point above the reservoir 13, with an overflow tube 21 extending through said reservoir and downward beyond the same. An intake pipe 22 leads from the bottom of the reservoir 13 to the sump 11 and establishes communication directly between the latter and the compartment 16 of said reservoir. The intake pipe 22 is controlled by means of a valve 23 arranged to be manipulated by a handle 24 combined with a pointer 25 adapted to move across a dial 26 to indicate the position of the valve and the duration of the operative period of the machine. The sump 11 accommodates an impeller 27 arranged to throw liquid in the tank upwardly and carried by a shaft 28 rotatively operated by a motor 29 to correspondingly actuate the impeller 27.

A lower drain tube 30 leads from the bottom of the sump 11 and is connected with the overflow tube 21 as shown in Figs. 2, 3 and 7; an upper drain tube 31 depends from the bottom of the tank 10 so as to communicate with the interior of the latter, and is connected with the lower drain tube 30 as shown in Figs. 2 and 3.

In addition to the parts so far described, I have provided a novel electrical control means which includes spaced electrodes 32 projecting into the sump 11 and constituting terminals of an electric circuit which includes the electric motor 29; the electrical control of the machine

is effected by the liquid in the sump 11 in co-operation with said spaced electrodes 32 or in equivalent arrangements by liquid arranged to co-operate with similar electrodes in a corresponding manner.

In the machine shown in the drawings, these electrodes 32 are so located as to be positioned at a point below the lower edge of the impeller blades 27, as shown in Fig. 3. Since with this arrangement the electric current must of necessity pass through the liquid when the machine is in operation, and unless prohibitively expensive insulation is provided to insulate the tank 10, the possibility exists that persons coming in contact with the metal parts of the machine may receive electric shocks during the operative periods of the machine The average house current at present in use is around 110 volts; this would give a decidedly noticeable shock which, in some cases, might be serious. In addition a current of this voltage can present an objectionable fire hazard.

It is therefore desirable to disassociate the grounded house current from the metal parts of the machine. This is accomplished by means of the aforesaid novel electrical control means wherein the house current is arranged to produce another independent current by induction, which induced current is passed through the liquid in the machine to operate a relay controlling the admission of the house service current to the motor 29.

Fig. 7 shows diagrammatically an example of the novel electrical equipment and wiring whereby the above indicated results are obtained and in which alternating electric current from a house service outlet is led through wires 33 to a transformer 34. The latter is connected by means of a wire 35 with one of the terminals 32 and by means of a wire 36 with one side of the coil of a relay 37, the other side of said coil being connected through a wire 38 with the other of said terminals 32. Means is provided for short circuiting or bridging the gap between the terminals 32 for the purpose to be more fully set forth hereinafter. In Fig. 7 the short circuiting means is manually controlled and comprises a momentary switch 39 from which a wire 40 leads to the wire 35 and which co-operates with a terminal 41 from which a wire 42 leads to the wire 38; in Fig. 8 the short circuiting means operates automatically and comprises two additional terminals 32^a projecting into the sump 11 in spaced superimposed relation to the terminals 32 or in any other relative relation thereto in other equivalent arrangements. The additional terminals 32^a are connected by means of wires 40^a and 42^a respectively with the respective wires 35 and 38. One of the wires 33 from the house line is connected with a wire 43 which leads to the motor 29, the other wire 33 from the house line leading to one end 44 of a relay armature 45, through a connecting wire 46. The armature 45 when attracted by the relay magnet contacts with the terminal or contact 47 of a wire 48 which leads to the motor 29, thereby admitting current to the latter.

The liquid in the machine will be electrically grounded to earth while the machine is being filled from a house water pipe or while being drained into a house wastepipe or if the tank of the machine has a conducting metallic connection leading to earth. Hence if the house service current were passed through the electrodes, for energizing the relay, instead of the secondary independent current I employ, a short circuit would occur if the machine happened to be plugged into the house electric line so the service line ground were on the side opposite the machine ground.

I have found that a relay wound with a coil of comparatively high resistance, properly arranged, will fail to function when the circuit is closed by clear water covering the electrodes 32 and yet will function as soon as the electrodes are bridged by a better conductor. The relay 37 is accordingly of the above-mentioned type, which will not close when the liquid between the electrodes is pure water. In such case the relay 37 may be closed, for instance by momentarily operating the switch 39 to bridge the gap between electrodes 32. The relay 37 responds instantly to the operation of the switch 39 and the motor 29 starts and both continue in operation until the sump 11 has finally drained and the electrodes 32 are no longer connected by liquid therein. The result of the aforesaid arrangement is that the machine may be positively started by actuating the momentary switch 39 and it stops positively because the residue clear water in the sump at the end of the rinsing operation hereinafter referred to is just enough to keep the relay 37 functioning and when the electrodes 32 are clear of the liquid, or perhaps only partly submerged, the relay 37 is de-energized and permits the armature 45 to move away from the contact 47 to thereby break the electric circuit and stop the motor 29.

Obviously the novel result effected by the momentary switch 39 could be accomplished by other equivalent means. For instance, as shown in Fig. 8, the momentary switch 39 could be replaced by the addition of the current supplied through additional electrodes 32^a located in a higher or in any selected part of the tank where said additional electrodes 32^a would come in contact with liquid therein and thereby increase the current admitted to the relay 37 to energize said relay sufficiently to cause its armature 45 to close. Such an alternative and equivalent arrangement is shown diagrammatically in Fig. 8.

Pure water, a comparatively poor electrical conductor, can be made a much better conductor by the addition of small quantities of various substances, such for instance as salt. With the arrangement described above positive cut-off of the motor can be provided even though the water happens to be a comparatively good conductor at the end of the machine's operation, and even though small particles of this water remain bridging electrodes and permitting the passage of a very small amount of current. This is accomplished by designing the relay so the armature will break well before its energizing current falls to the maximum that will pass between electrodes 32 when small particles of comparatively high conductivity, residual water bridge the electrodes 32. With this very desirable arrangement the introduction of additional current by means of the momentary switch 39, or by the additional electrodes 32^a referred to above, is necessary to energize the relay 37 sufficiently to close its armature 45 and start the motor.

Referring to Fig. 8 and the substitution of electrodes 32^a for the momentary switch 39 the operation is as follows: When liquid admitted to the machine rises in the sump 11 high enough to cover electrodes 32 but not high enough to reach electrodes 32^a, the current passed through electrodes 32 is insufficient to cause the closing

of relay armature 45 and just enough to keep this armature closed once it is closed by the admission of more current to the relay coil 37. When this liquid rises higher and high enough to even partly cover electrodes 32a, there is passed through them to the relay coil 37 the necessary additional current to close relay armature 45 and operate the motor 29. By arranging electrodes 32 so they must be almost entirely submerged by liquid to prevent the relay armature 45 from breaking, small amounts of residual liquid, or solids, which may remain bridging electrodes 32, at the end of the machine's operation, will not pass enough current between electrodes 32 to prevent the relay armature 45 from opening and the motor 29 from stopping.

From the above it is evident that the application of these novel arrangements is not limited to machines of the kind described hereinbefore, and that they can be advantageously employed in other fields and devices.

The operation of the machine is as follows: Through a hose connected with a hot water faucet, or otherwise, hot water is passed into the reservoir 13 through the tube 19 until both of the reservoir chambers 16 and 17 are full, as indicated by overflowing out of tube 21. The handle 24 is now operated to open the valve 23, which permits cleaning liquid from the washing compartment 16 of the reservoir 13 to pass into the bottom of the sump 11 until said liquid submerges the electrodes 32. The current passing across electrodes 32 being insufficient to energize the relay 33 enough to close its armature 45, momentary switch 39 is then operated and this energizes the relay sufficiently to shift the armature 45 into engagement with the contact 47 and cause the motor to operate. From this stage on, the operation of machine is entirely automatic.

When the cleaning liquid rises in the sump 11 to a point where it comes in contact with the impeller blades 27, the latter will throw said liquid upwardly into said tank 10 in the form of a spray against articles to be washed which were previously placed in tank 10.

The cleaning liquid is circulated by the impeller 27 many times a minute. In the meantime, this liquid is draining out of the machine through drain 31 at a comparatively slow rate.

While this washing period is progressing, the liquid feed to sump 11 is solely from the "washing" compartment 16 of the reservoir 13. Check valve 18 prevents the clear, rinsing water from leaving the "rinsing" compartment 17. Eventually the level of liquid in compartment 16 will fall below the levels of the openings 15 in partition 14 and the liquid seal between the two compartments 16 and 17 will be broken and clear water will begin to escape from compartment 17 and find its way into sump 11. Before the rinsing water comes in contact with the impeller blades 27, all or practically all of the dirty washing liquid has drained out of the tank 10.

When the rinsing water has drained out of the tank to the extent that the amount in the sump 11 is insufficient to reach the bottom of impeller blades 27 the spray ceases. When the rinsing water in the sump 11 recedes so as to expose electrodes 32 the electric circuit to the coil of the relay 37 is broken, the relay armature opens and the motor 28 stops automatically.

The purpose of dividing the reservoir 13 into a plurality of compartments is to insure uniformity in the strength of the cleaning liquid throughout the washing period. If a cleaning compound were placed directly in tank 10 the washing liquid would be excessively strong at the start of the washing period and there would be traces of the washing liquid present at the end of the rinsing period.

It is obvious that while the illustrated example herewith submitted shows a reservoir 13 containing a partition dividing same into two compartments, the same results could be accomplished by the use of two separate reservoirs, one for washing and one for rinsing liquid connected together and to the tank by suitable piping.

Various other changes in the specific forms shown and described may be made within the scope of the claims without departing from the spirit of the invention.

I claim:

1. In a machine of the kind described, the combination of a tank adapted to contain liquid, means for impelling said liquid in said tank, an electric motor for actuating said impelling means, a pair of terminals adapted to be engaged by the liquid in said tank to connect the same, a transformer having its secondary in circuit with said terminals for reducing the voltage of the current thereat, means for supplying an alternating current to the primary of said transformer, a relay in said circuit, an armature controlled by said relay, and an electric circuit including said motor adapted to be opened and closed by means of said armature.

2. In a machine of the kind described including a tank to hold liquid, and means for circulating said liquid in the tank, that improvement which comprises an electric motor for operating the circulating means, and an electric circuit having terminals projecting into the tank and adapted to be connected by the liquid therein to complete said electric circuit and cause the operation of the electric motor.

3. In a machine of the kind described, a tank, means for circulating a liquid within said tank, an electric motor for actuating said circulating means, a source of electric energy, and a pair of terminals within the tank, normally electrically insulated from each other, and connected in series in a circuit with said source of electric energy for controlling the operation of said motor, and positioned in said tank so that liquid therein will come in contact with both terminals and close said circuit and cause the motor to actuate the circulating means.

4. In a machine of the kind described, a tank, means for circulating a liquid within the tank, an electric motor for actuating said circulating means, a source of electric energy, a pair of terminals within the tank normally electrically insulated from each other, and connected in series in a circuit with said source of electric energy for controlling the operation of the motor, and positioned in said tank so that each of them will come in contact with the liquid in said tank, thereby closing said circuit and causing the motor to actuate the circulating means, and a drain in said tank through which liquid therein may be withdrawn to free one of said terminals from contact with the liquid, thereby breaking said circuit and causing the motor and the circulating means to become inactive.

5. In a machine of the kind described, a tank, means for circulating a liquid within said tank, an electric motor for actuating the circulating means, a pair of terminals within the tank normally insulated from each other electrically, and arranged to be brought into electrical connection

by liquid admitted to the tank, a source of electric energy, a pair of conductors each carrying said energy to said terminals in a circuit normally broken by said terminals and closed when said terminals are brought into electrical connection by said liquid, and means operated by the flow of said energy in said circuit arranged to introduce energy into said motor, thereby causing the motor to actuate the circulating means when liquid in the tank develops an electrical connection between the terminals.

6. In a machine of the kind described, a tank, means for circulating a liquid within said tank, an electric motor for actuating the circulating means, a source of electric energy, a pair of terminals within the tank normally electrically insulated from each other and connected in series in a circuit with said source of electric energy for controlling the operation of said motor, said terminals being so positioned in said tank that liquid therein will contact with both of said terminals and close said circuit and cause the motor to actuate the circulating means before liquid admitted to the tank imposes its maximum load on the circulating means and the motor.

7. In a machine of the kind described, a tank, means for circulating a liquid within the tank, an electric motor to operate said circulating means, an electrical circuit for conducting electric energy to operate the motor, a circuit breaker to make and break said circuit, a conductor connected in parallel with said motor and circuit breaker, and a secondary electrical circuit for conducting an electric current induced by the flow of electric energy in said conductor and normally incomplete, said secondary circuit including two terminals in said tank and being arranged to be completed by conductivity provided by liquid in the tank connecting said terminals and to cause the circuit breaker to close and to operate the motor.

8. In a machine of the kind described, a tank, means for circulating a liquid in said tank, an electric motor for actuating the circulating means, a source of electric current, a transformer to receive said current and to transform same into a secondary current, a device controlling the starting and stopping of said motor, and conductors for transmitting the secondary current through the liquid in the tank to said device to thereby cause the motor to operate.

9. In a machine of the kind described, a tank, electric motor driven means for circulating a liquid in said tank, a pair of electric terminals within the tank arranged to be electrically joined by liquid in said tank, a first circuit of electrical energy for operating said motor, a circuit breaker arranged to close said circuit to the motor, and a second and independent circuit of electric energy arranged in series with said terminals and adapted to close the circuit breaker, when said terminals are electrically joined.

DOUGLAS E. BONNER.