United States Patent

Smith

[15] **3,647,098**

[45] **Mar. 7, 1972**

[54] DUMP BODY PIVOT SYSTEM AND LOCK

[72] Inventor: **Harold Eugene Smith**, Defiance, Ohio

[73] Assignee: **Smithpac Canada Ltd.**, Toronto, Ontario, Canada

[22] Filed: **Jan. 19, 1970**

[21] Appl. No.: **3,788**

Related U.S. Application Data

[63] Continuation-in-part of Ser. No. 703,214, June 18, 1968.

[52] **U.S. Cl.** .....**214/508**, 100/229 R, 298/14, 298/17.5

[51] **Int. Cl.**.....**B60p 1/04**

[58] **Field of Search** 214/508, 83.3, 503; 298/14–16, 17.5, 12; 100/229

[56] **References Cited**

UNITED STATES PATENTS

2,739,837 3/1956 Sykes.....298/12 X

Primary Examiner—Albert J. Makay
Attorney—Smith & Biggar

[57] **ABSTRACT**

A refuse-collecting apparatus or vehicle includes a refuse-receiving receptacle pivotally mounted on a supporting frame or chassis for tilting movement between a generally horizontal loading position and a tilted dumping position. A loading chamber is provided on the chassis for alignment with a loading aperture in the refuse-receiving receptacle when the latter is disposed in its generally horizontal position. A longitudinally reciprocable loading plunger serves to transfer refuse from the loading chamber into the refuse-receiving receptacle which is pivotally mounted on the chassis by means of pivot pins disposed in elongated slots so that the refuse-receiving receptacle moves a short distance rearwardly out of its loading position to release its sealing engagement with the loading chamber prior to pivotal elevation of the refuse-receiving receptacle into its dumping position.

6 Claims, 13 Drawing Figures

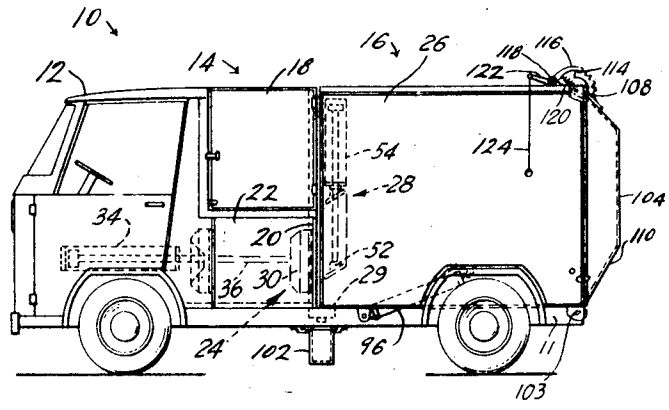

PATENTED MAR 7 1972

3,647,098

SHEET 1 OF 6

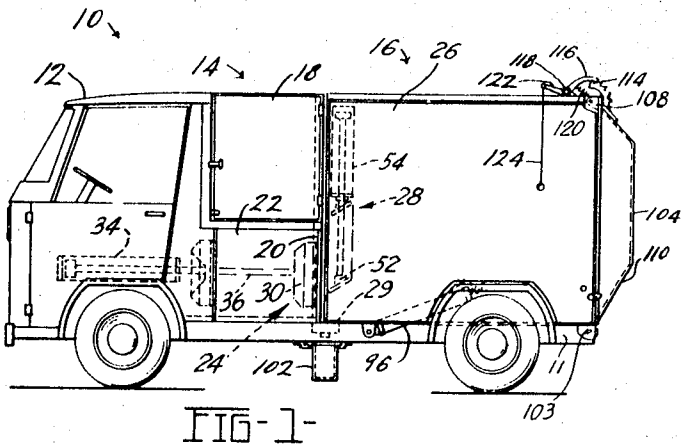

FIG-1-

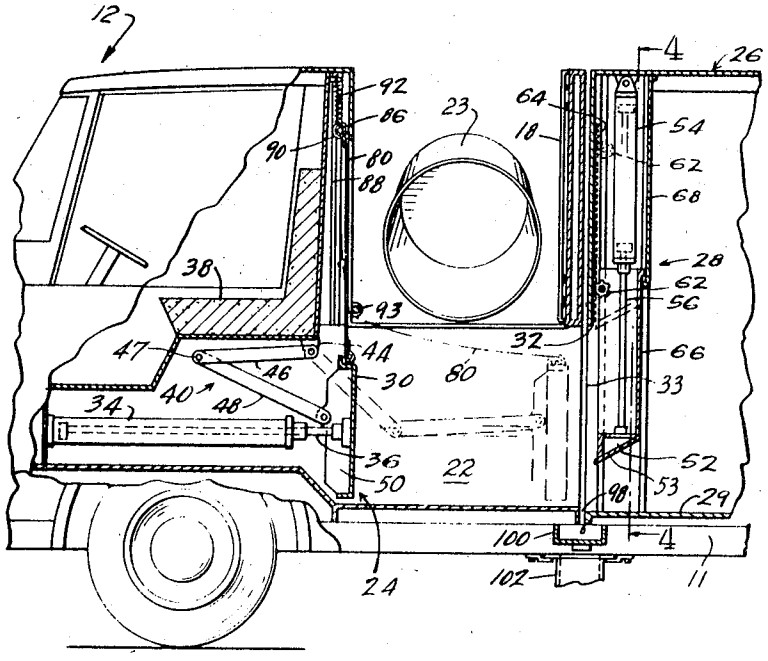

FIG-2-

INVENTOR.
HAROLD EUGENE SMITH
BY
George A. Rolston.

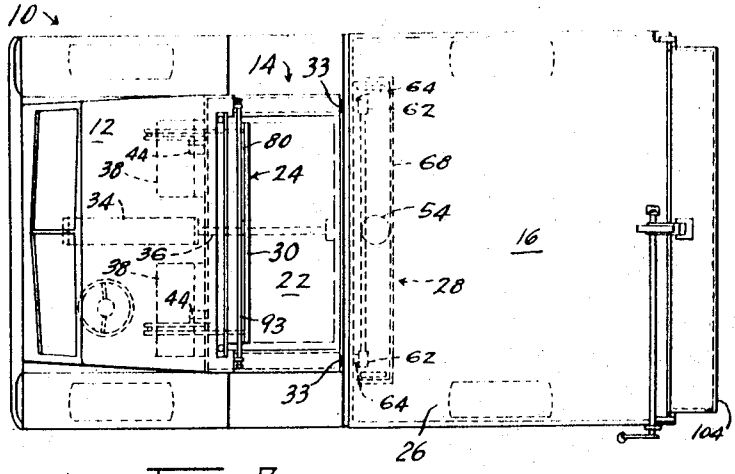

FIG-3-

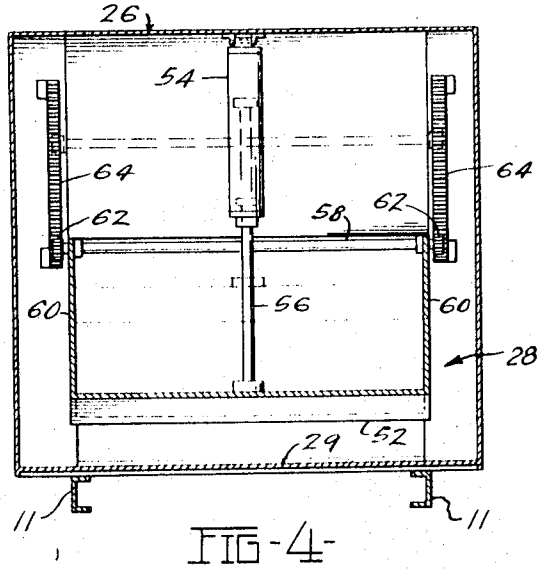

FIG-4-

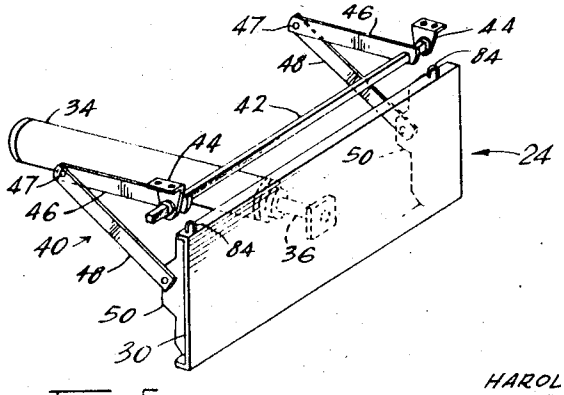

FIG-5-

INVENTOR.
HAROLD EUGENE SMITH
BY
George A. Rolston

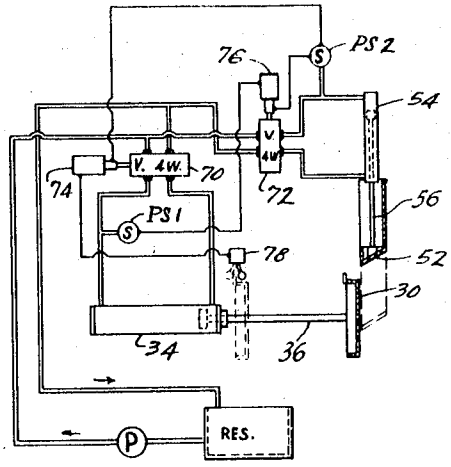

FIG-6-

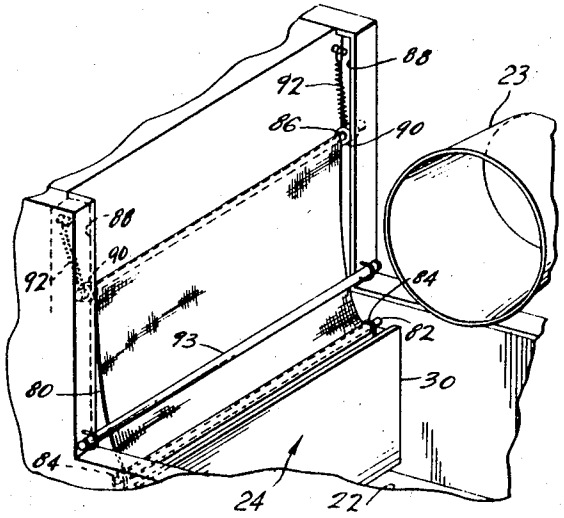

FIG-7-

INVENTOR.
HAROLD EUGENE SMITH
BY
George A. Rolston.

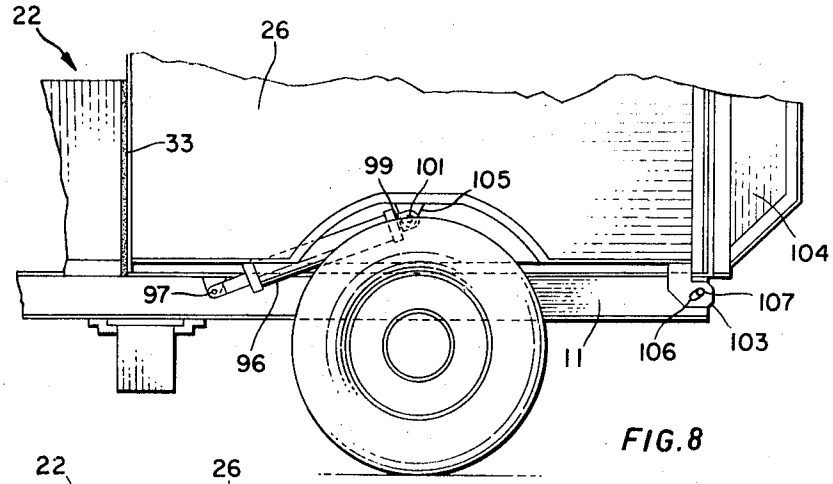

FIG. 8

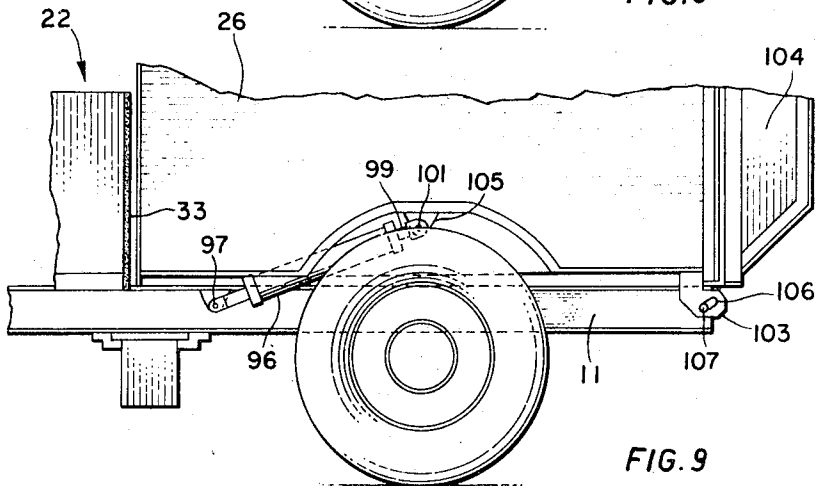

FIG. 9

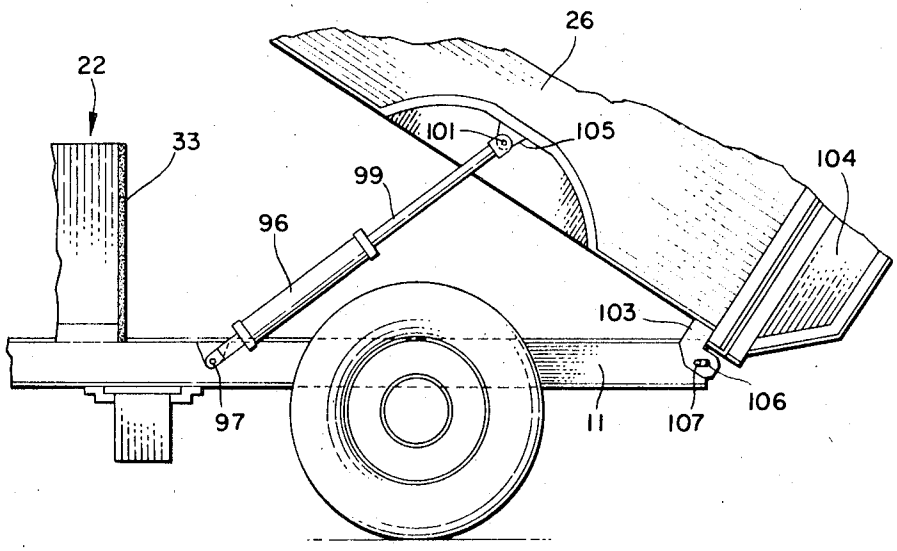

FIG. 10

Inventor

HAROLD EUGENE SMITH

by: George A. Rolston.

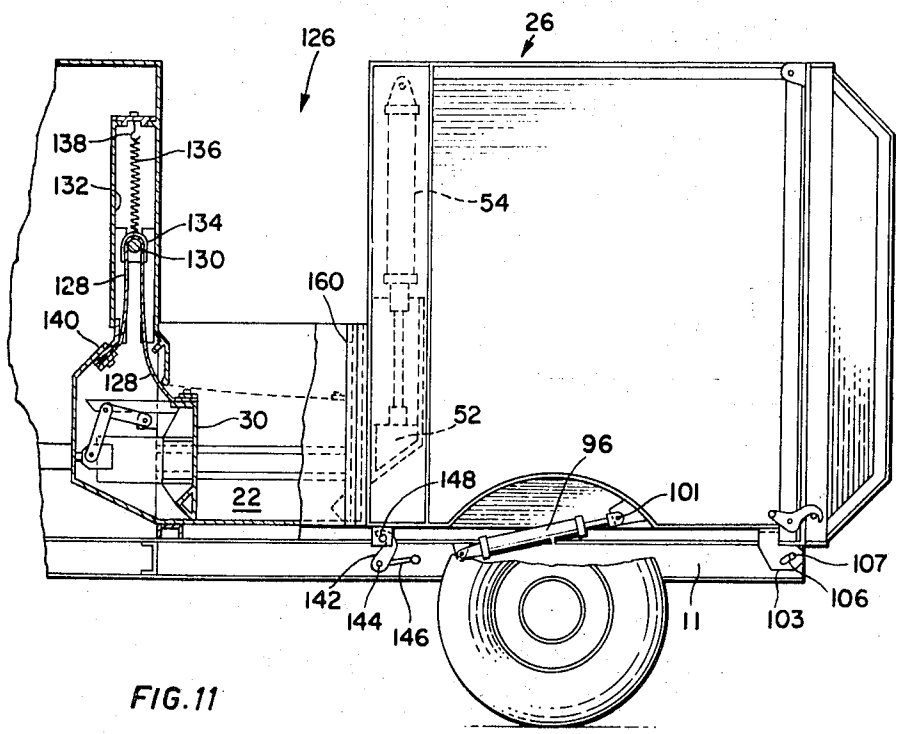

FIG. 11

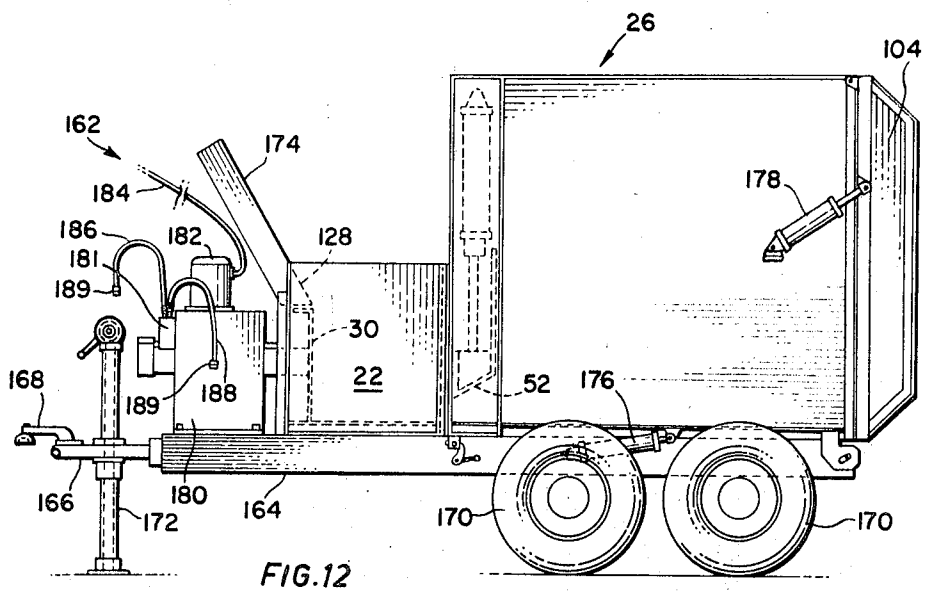

FIG. 12

Inventor

HAROLD EUGENE SMITH

by: George A. Rolston

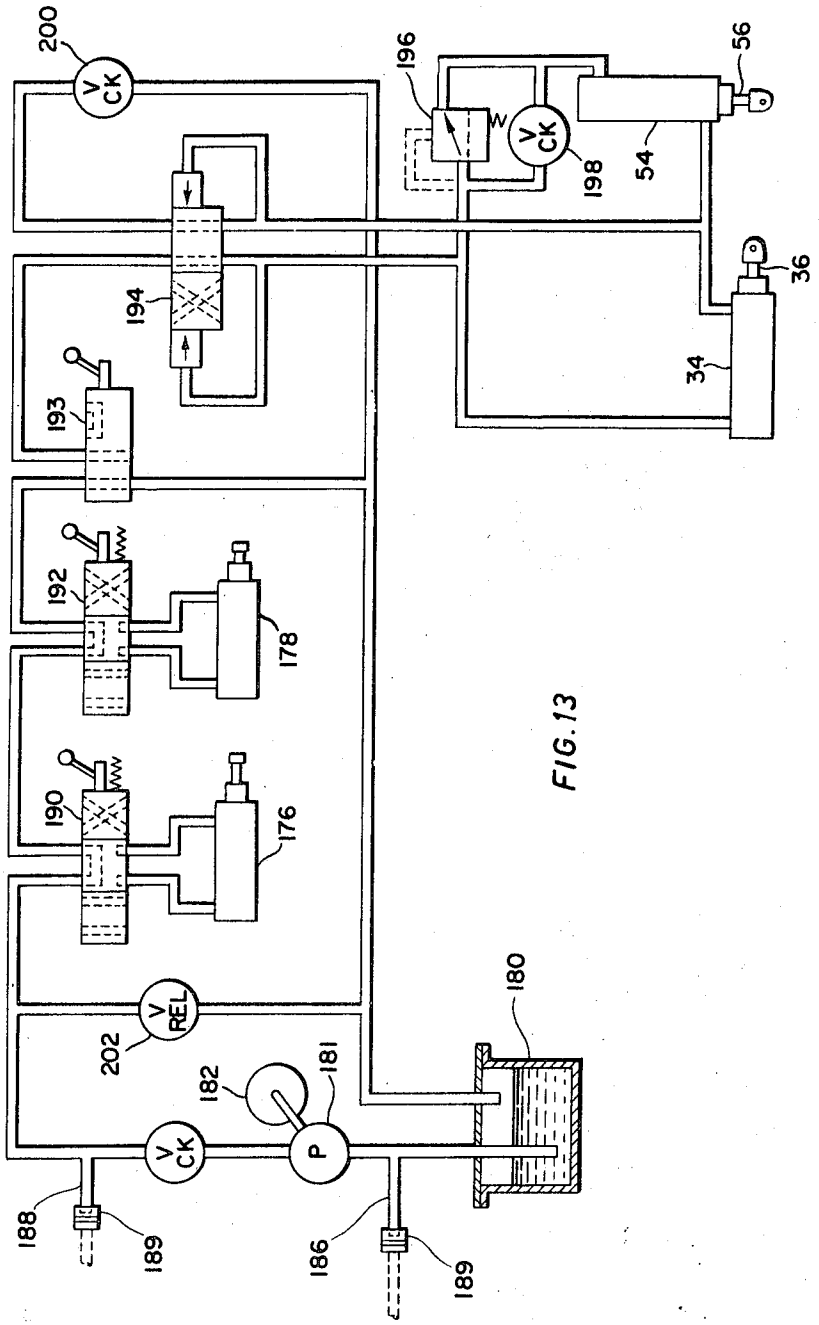

FIG. 13

Inventor

HAROLD EUGENE SMITH

by: George A. Rolston.

DUMP BODY PIVOT SYSTEM AND LOCK

This application is a continuation-in-part of pending application Ser. No. 703,214, filed Jan. 18, 1968 of Harold E. Smith and entitled "Refuse Collecting Apparatus."

BACKGROUND OF THE INVENTION

The present invention relates to refuse-collecting apparatus or vehicles and more particularly to a refuse-collecting vehicle including a refuse-receiving receptacle pivotally mounted on a supporting frame or chassis of such a vehicle for tilting movement between a generally horizontal loading position and a tilted dumping position. A refuse-collecting vehicle in accordance with this invention also includes a loading chamber mounted on the supporting frame or chassis of the vehicle so as to be disposed adjacent a loading aperture of the refuse-receiving receptacle for the transfer of refuse from the loading chamber into the refuse-receiving receptacle of the vehicle when such receptacle is disposed in its generally horizontal loading position.

In a refuse-collecting vehicle of the aforementioned type, difficulties have heretofore been experienced in obtaining a durable sealing engagement between the refuse-receiving receptacle and the adjacent edge faces of the loading chamber.

It is accordingly a principal object of the present invention to provide a refuse-collecting vehicle of the aforementioned type and having improved means for maintaining effective sealing engagement, when required, between the loading chamber and the refuse-receiving receptacle thereof.

If is another object of the present invention to provide a refuse-collecting vehicle of the aforementioned type in which wear of a sealing means provided between the loading chamber and the refuse-receiving receptacle of the vehicle on tilting movement of such receptacle between its loading and dumping positions is significantly reduced.

Yet another object of this invention is to provide a pivotal arrangement for mounting a tiltable refuse-receiving receptacle on a supporting frame or chassis of a refuse-collecting vehicle and which pivotal arrangement has a relatively simple and reliable construction.

A further object of this invention is to provide an arrangement in a refuse-collecting vehicle by the use of which a refuse-receiving receptacle of such a vehicle can be moved forwardly and rearwardly relative to the chassis of such a vehicle and into and out of sealing engagement with the loading chamber of that vehicle with a reduced mechanical effort prior to tilting movement of such receptacle from its generally horizontal position into its tilted dumping position.

Other objects of the invention will become apparent as the description herein proceeds.

SUMMARY OF THE INVENTION

In its broadest scope, the present invention provides a refuse-collecting apparatus or vehicle which comprises a supporting frame; a refuse-receiving receptacle having a forward feed end and a rear discharge end and pivotally mounted by a pivot means on said supporting frame in proximity to said rear discharge end thereof for tilting movement of said receptacle between a generally horizontal position and a tilted dumping position; a loading aperture in said forward feed end of said receptacle for the transfer of refuse into said receptacle; a loading chamber disposed on said supporting frame forwardly of said feed end of said refuse-receiving receptacle so as to be adjacent said loading aperture when said receptacle is disposed in said generally horizontal position thereof; a loading plunger within said loading chamber for rearward and forward movement toward and away from said loading aperture respectively for pushing refuse through said loading aperture; a loading plunger drive mechanism for effecting said movement of said loading plunger toward and away from said loading aperture, said pivot means being generally transversely disposed and pivotally interconnecting said supporting frame and said refuse-receiving receptacle and including transversely spaced-apart pivot plates and associated transversely extending pivot pins, each said pivot plate having an elongated slot extending rearwardly relative to said supporting frame when said receptacle is disposed in said generally horizontal position thereof whereby, on movement of said pivot pins along said elongated slots, said refuse-receiving receptacle is moved longitudinally relative to both said supporting frame and said loading chamber out of sealing engagement with said loading chamber prior to said pivotal movement of said receptacle from said generally horizontal position to said tilted dumping position thereof; and a tilting drive mechanism operatively interconnecting said supporting frame and said refuse-receiving receptacle and operative to apply an upwardly and rearwardly directed force to said receptacle forwardly of said pivot means for moving said receptacle into said tilted dumping position thereof and to apply an oppositely directed force to said receptacle for moving said receptacle into said generally horizontal position thereof and into sealing engagement with said loading chamber.

The mechanical effort required to move the refuse-receiving receptacle of a refuse-collecting vehicle in accordance with this invention forwardly and rearwardly relative to the chassis of the vehicle can be considerably reduced in accordance with another feature of this invention by providing the aforementioned elongated slots of the pivot plates so that they extend both rearwardly and upwardly relative to the chassis of the vehicle, when the refuse-receiving receptacle thereof is disposed in its generally horizontal position. By the use of slots of this particular configuration, the refuse-receiving receptacle of the vehicle is held elevated slightly from the chassis or supporting frame thereof during a substantial portion of its rearward and forward movements so reducing the frictional forces resisting such movements.

In accordance with another feature of this invention, releasable locking means are provided for releasably holding the refuse-receiving receptacle in its generally horizontal position. A typical construction for such a locking means will be described hereinafter in greater detail with reference to the specific embodiments illustrated in the accompanying drawings.

Other objects, features and advantages of this invention will also become apparent as the description herein proceeds.

BRIEF DESCRIPTION OF THE DRAWINGS

The invention will now be described merely by way of illustration with reference to the accompanying drawings in which:

FIG. 1 is a side view in elevation of a refuse-collecting vehicle embodying the present invention and with certain parts thereof shown in phantom outline;

FIG. 2 is an enlarged, fragmentary side view in elevation, with certain parts broken away and with certain parts in section, of the refuse-collecting vehicle of FIG. 1, and particularly showing a loading plunger and a compacting plunger of that vehicle;

FIG. 3 is a top view of the refuse-collecting vehicle shown in FIG. 1;

FIG. 4 is a transverse vertical sectional view taken along the line 4—4 of FIG. 2 and showing in greater detail the compacting plunger of the vehicle of FIG. 1;

FIG. 5 is a perspective view of the loading plunger of the vehicle of FIG. 1 and showing means provided therein for maintaining the loading plunger perpendicular to the path of travel during its forward and rearward movement;

FIG. 6 is a diagrammatic view of a hydraulic system provided in the vehicle of FIG. 1 for operating the loading and compacting plungers thereof;

FIG. 7 is a fragmentary perspective view of a loading chamber of the vehicle of FIG. 1 and showing a flexible cover affixed to the loading plunger and movable therewith for the purpose of preventing refuse from being dumped forwardly of the loading plunger;

FIG. 8 is a fragmentary and enlarged schematic side elevation of the refuse-collecting vehicle of FIG. 1 showing the relative positions of several structural components thereof when the refuse-receiving receptacle of the vehicle is disposed in its generally horizontal loading position in sealing engagement with the loading chamber of the vehicle and operatively corresponding to the position shown in FIG. 1;

FIG. 9 is a fragmentary and enlarged schematic side elevation similar to that of FIG. 8 but showing the positions of the several structural components thereof in their release positions prior to tiling movement of the refuse-receiving receptacle of the vehicle;

FIG. 10 is a fragmentary and enlarged schematic side elevation similar to those of FIGS. 8 and 9 but showing the positions of the several components thereof after the refuse-receiving receptacle of the vehicle has been tilted into its dumping position;

FIG. 11 is a fragmentary side elevation of a modified refuse-collecting vehicle embodying the invention;

FIG. 12 is a somewhat schematic side view in elevation of another modified refuse-collecting vehicle embodying the invention; and

FIG. 13 is a diagrammatic view of a hydraulic system employed with the refuse-collecting vehicle of FIG. 12.

DESCRIPTION OF THE PREFERRED EMBODIMENTS

Referring first to FIG. 1, a garbage-collecting apparatus embodying the invention is shown therein as a refuse-collecting vehicle **10** which includes a chassis or supporting frame **11**, a cab section generally indicated at **12**, a loading chamber section generally indicated at **14** and a receptacle section generally indicated at **16**. Because of the high degree of compaction possible with the apparatus embodying the invention, the overall refuse vehicle can be about the size and shape of a bakery or milk truck, for example. Basically, in operation, refuse is dumped into the loading chamber section **14** from which it is pushed into the refuse receptacle section **16** where it is compacted and from which it is subsequently dumped.

The loading section **14** can be open at the top and equipped with loading doors **18** on each side, the doors being hinged to and supported by suitable frame members **20**. A loading chamber **22**, formed below the doors **18**, can be relatively small and with low sidewalls to enable a garbage can **23** (FIG. 2) or the like to be dumped thereinto when either door **18** is open. A loading plunger assembly generally indicated at **24** in the loading chamber **22** operates continually to push deposited refuse rearwardly into the receptacle section **16**. Because of this continuous operation, the loading chamber **22** is constantly cleared and can consequently be of small size to further the overall compact design of the vehicle.

The receptacle section **16** includes a tiltable refuse-receiving receptacle **26** which receives the refuse from the loading chamber **22**. When the refuse has been pushed into the receptacle **26**, a refuse-compacting plunger assembly generally indicated at **28** compacts the refuse against a floor **29** or other stationary surface, independently of the amount of refuse already in the receptacle. With the double plunger arrangement illustrated, a 5 cubic yard receptacle can carry approximately 70 percent of the load carried in a 16 cubic yard truck heretofore known.

The loading plunger assembly **24**, as shown in FIGS. **2** and **5**, includes a loading plunger **30** which extends across the width of the loading chamber **22** but is only about two-thirds as high as the chamber **22** and about two-thirds as high as a discharge opening or loading aperture **32** communicating with the refuse-receiving receptacle **26**. The loading plunger **30** is operated by a hydraulic cylinder **34** from which extends a cylinder rod **36** connected to a central portion of the loading plunger **30**. The cylinder **34** can extend into the cab section **12** of the vehicle between or below seats **38** therein. The stroke of the cylinder **34** is of sufficient length to enable the loading plunger **30** to move between a retracted position in which it is disposed at the forward end of the loading chamber **22**, as shown in full lines in FIG. **2**, and an extended or rearwardmost position in which it is disposed adjacent the discharge opening or loading aperture **32** as shown in dotted lines in FIG. **2**.

A torque bar assembly generally indicated at **40** in FIGS. **2** and **5** and omitted from FIG. **1** maintains the loading plunger **30** generally perpendicular to the direction in which it is moved. The torque bar assembly **40** includes a main torque bar **42** which is disposed generally perpendicular to the direction of travel of the loading plunger **30** and is rotatably mounted in ears **44** which are attached to and supported by a suitable framework portion of the cab section **12** of the vehicle **10**. A pair of torque arms **46** are affixed to spaced portions of the torque bar **42** and are parallel to one another. End portions of the torque bars **46** are pivotally connected at **47** to pivotal connecting links **48** which are in turn pivotally attached to spaced flange portions **50** of the loading plunger **30**. With this arrangement, any tendency for the loading plunger **30** to cock will tend to twist the torque bar **42**, which is sufficiently heavy to resist such twisting and to maintain the loading plunger **30** generally perpendicular to its direction of travel.

The refuse-compacting plunger assembly **28** (FIGS. **2** and **4**) includes a refuse-compacting plunger **52** having an undersurface **53** which slants rearwardly and upwardly so as to tend to move refuse rearwardly into the refuse-receiving receptacle **26** during compaction of such refuse. The refuse-compacting plunger **52** is moved in a vertical path adjacent the loading aperture **32** by a suitable hydraulic cylinder **54** which has a cylinder rod **56** connected to the refuse-compacting plunger **52**. The hydraulic cylinder **54** is of sufficient length to enable the refuse-compacting plunger **52** to move between a fully retracted position in which it is disposed near the top of the loading aperture **32** (as shown in dotted lines in FIG. **2**) and a fully extended position in which it is disposed near the floor **29** of the refuse-receiving receptacle **26**, approximately as shown in solid lines in FIG. **2**.

The refuse-compacting plunger **52** is maintained generally perpendicular to its direction of travel by means of a torque shaft **58** (FIG. **6**) extending across the plunger **52** and rotatably held by sidewalls **60** thereof. A pair of pinion gears **62** are affixed to and rotate with the shaft **58** and engage gear racks **64** during the entire movement of the refuse-compacting plunger **52** between its extended and retracted positions. Any tendency for the refuse-compacting plunger **52** to cock will tend to twist the torque shaft **58** which is sufficiently heavy to resist such twisting. If desired, the refuse-compacting plunger **52** can have a cover wall **66** extending upwardly therefrom and telescoping within a fixed cover **68** to prevent the possibility of refuse being jammed upwardly of the plunger **52**.

In operation of the vehicle **10**, the loading plunger **30** preferably operates continually between its forward and rearward positions constantly to clear the loading chamber **22**. The refuse-compacting plunger **52** preferably moves downwardly each time the loading plunger **30** has moved to its extended or rearward position. With the aforementioned provision of a space between the loading plunger **30** and the top edge of the loading aperture **32**, the refuse-compacting plunger **52** will tend to pull into the refuse-receiving receptacle **26** any refuse which is disposed above the loading plunger **30** as well as tending to shear any articles of refuse projecting forwardly from within the refuse-receiving receptacle **26** through the loading aperture **32**.

A suitable hydraulic system for effecting operation of these plungers is shown diagrammatically in FIG. **6**. In the system illustrated, the aforementioned hydraulic cylinders **34** and **54** are supplied with hydraulic fluid from a reservoir designated Res. and a pump P through suitable four-way valves **70** and **72**. These valves **70** and **72** are operated by latch-trip relays **74** and **76** respectively. When both plungers **30** and **52** are in their retracted positions, a limit switch **78** is contacted by the loading plunger **30** and is closed to energize the aforementioned latch-trip relay **74** and cause hydraulic fluid to be sup-

plied through the valve 70 to the blind end of the cylinder 34. The loading plunger 30 then extends rearwardly, pushing refuse into the refuse-receiving receptacle 26 until it reaches the end of its stroke. At this time, pressure builds up in the cylinder 34 until a pressure switch PS1 is actuated. This in turn energizes the latch-trip relay 76 and causes fluid to be supplied to the blind end of the hydraulic cylinder 54 through the valve 72. The refuse-compacting plunger 52 then moves downwardly until it either reaches the end of its stroke or compacts the refuse thereunder sufficiently to cause a second pressure switch PS2 to be energized. This switch PS2 then trips both the relays 74 and 76 to return the valves 70 and 72 to their original positions to cause both plungers 30 and 52 to retract. The hydraulic cylinder 54 is usefully of smaller diameter than the cylinder 34 to cause the refuse-compacting plunger 52 to reach its retracted position first. When the loading plunger 30 again reaches its retracted or forwardmost position, it contacts the limit switch 78 and causes the relay 74 to energize the valve 70 and cause the loading plunger 30 to again move toward its extended position to repeat the operating cycle.

Since refuse will frequently be dumped into the loading chamber 22 when the loading plunger 30 is disposed rearwardly of its fully retracted position, means must be provided to prevent refuse from dropping forwardly of the loading plunger 30 and eventually causing jamming of that plunger. For this purpose, a flexible cover or curtain 80 (FIGS. 2 and 7) can be employed. A lower edge of the cover or curtain 80 is suitably attached to an upper edge portion of the loading plunger 30 by a rod 82 sewn into the edge of the cover 80 and received in end ears 84 affixed to the upper edge of the loading plunger 30. The upper edge of the cover 80 is resiliently supported to enable the cover to move with the loading plunger 30 and yet retract when the plunger 30 retracts. For this purpose, an upper rod 86 is sewn into the upper edge of the cover 80 and extends beyond the edges thereof into tracks 88 formed by a suitable framework of the vehicle. Suitable wheels 90 are carried by the ends of the rod 86 to enable the upper edge of the cover to be guided with less friction. Long springs 92 are connected to end portions of the rod 86 and are suitably connected to the vehicle at their opposite ends. The springs 92 are placed in tension when the loading plunger 30 moves toward its extended rearward position and thus cause the cover 80 to retract when the plunger 30 retracts. The cover 80 is guided around a guide rod 93 which also helps to clear refuse off the cover 80 when the latter retracts.

The cover 80 is positioned approximately as shown in dotted lines in FIG. 2 when the loading plunger 30 is extended so that refuse dumped on the cover 80 will tend to move toward the refuse-receiving receptacle 26, particularly as the plunger 30 retracts forwardly and the cover 80 moves toward a vertical position. Suitable stops (not shown) can be provided to limit the extent of downward movement of the wheels 90 and the rod 86 so to prevent the cover 80 from moving downwardly too far in the event that very heavy refuse is dumped thereon when the plunger is extended.

The cover 80 is relatively maintenance free and is of low cost initial construction. Replacement can be accomplished easily and relatively inexpensively, when necessary.

When the refuse-receiving receptacle 26 is to be emptied, it can be tilted rearwardly by a suitable fluid-operated dumping cylinder 96 (FIG. 1). When the receptacle 26 is tilted, the loading chamber doors 18 and the associated structure remain with the chassis of the vehicle. When the refuse-receiving receptacle 26 is in its lowered position, a slight gap 98 may exist between the floor 29 of the receptacle 26 and the loading chamber 22. In order to dispose of liquids from the refuse which may drain from the gap 98 (FIG. 2), a trough 100 extends transversely under the vehicle and directs the liquid into a receptacle 102 located at one side of the vehicle. This receptacle 102 can be emptied from time to time, for example, when refuse is dumped from the vehicle 10.

An unloading door 104 is located at the rear end of the refuse-receiving receptacle 26 (see particularly FIGS. 1 and 3). The door 104 is suitably hinged by ears 108 to the upper rear corners of the refuse-receiving receptacle 26 and can pivot outwardly when the receptacle 26 is tilted. The door also has a slanted lower portion 110 which causes refuse to move upwardly toward the top of the vehicle as it is compacted and pushed rearwardly in the receptacle 26. This enables the compacted refuse to fill the receptacle 26 quite uniformly.

In order to maintain the door 104 in the open position when the refuse-receiving receptacle 26 is lowered from its dumping position to its generally horizontal loading position, a ratchet 114 is affixed to the door, preferably at an upper edge portion thereof. A pawl 116 engages the ratchet 114 and is pivotally supported on an axle 118. The pawl is urged toward the ratchet 114 by a spring 120. As the receptacle 26 tilts and the door 104 swings open, the teeth of the ratchet 114 can move past the pawl 116 without resistance. When the door 104 is in its fully open position, any tendency for it to close as the receptacle 26 is lowered is prevented by cooperation of the pawl and the teeth.

When the refuse-receiving receptacle 26 is lowered, the door 104 can then be swung shut by releasing the pawl 116. For this purpose, the axle 118 has an arm 122 at one side of the receptacle connected to a suitable release cord 124 which can be pulled by an operator to move the axle 118 in a counterclockwise direction and release the pawl 116 from the ratchet 114. Of course, the same result can be obtained by mounting the ratchet 114 on the receptacle 26 and the pawl 116 on the door 104. In addition, the ratchet 114 can be mounted to pivot and be released rather than the pawl 116.

Latch means are usefully provided for holding the door 104 in its closed position but, since the structure and mounting of the door 104 form no part of the present invention, these members will not be described herein in greater detail.

Having generally described the structure of the vehicle 10, the particular manner in which the refuse-receiving receptacle 26 is pivotally moved between the generally horizontal loading position shown in FIGS. 1 and 8 in which the aforementioned loading aperture 32 is aligned with the loading chamber 22 and a tilted dumping position as shown in FIG. 10 will now be explained.

In order to prevent the leakage of liquid waste through the gap between the walls of the loading chamber 22 and the refuse-receiving receptacle 26, a resiliently compressible seal or gasket 33 is suitably mounted on the rear edge surfaces of the walls of the loading chamber 22. It has been found that, with a simple pivotal mounting of the refuse-receiving receptacle 26 on the chassis 11 of the vehicle 10, such a seal 33 is as hereinbefore indicated rapidly worn when the receptacle 26 is moved between its loading and dumping positions. This problem is significantly alleviated in accordance with this invention by the provision of the pivot means hereinbefore described which causes the refuse-receiving receptacle 26 to be moved rearwardly relative to the chassis or supporting frame 11 before the receptacle 26 commences to pivot upwardly to its dumping position as illustrated in FIG. 10.

In the particular construction shown in FIGS. 1 to 10, the refuse-receiving receptacle 26 of the vehicle 10 is provided at its rearward end and on each side of its longitudinal center line with a pair of downwardly extending and transversely spaced apart lugs 103 with elongated slots 106 which receive generally horizontal pivot pins 107 mounted in turn on the chassis 11 at the rearward end thereof. On operation of the vehicle 10 to move the refuse-receiving receptacle 26 from its generally horizontal loading position as shown in FIGS. 1 and 8 and into its tilted dumping position as shown in FIG. 10, the refuse-receiving receptacle 26 is first moved rearwardly so that the elongated slots 106 are disposed as actually shown in FIG. 9 before the forward end of the receptacle commences to pivot upwardly into its tiled dumping position. Conversely, during movement of the refuse-receiving receptacle 26 out of its tilted dumping position as shown in FIG. 10 and into its

generally horizontal position as shown in FIGS. 1 and 8, the refuse-receiving receptacle 26 is first moved into the generally horizontal position of FIG. 9 and then advanced forwardly relative to the chassis 11 for sealing engagement with the seal 33 provided on the rear edge faces of the walls of the loading chamber 22. It will further be seen that, in accordance with a preferred feature of the present invention, each of the elongated slots 106 extends rearwardly and upwardly relative to the chassis 11 so that most of the receptacle 26 will be out of contact with the chassis 11 during its forward and rearward movement relative thereto to reduce the frictional forces involved and the load on the tilting drive mechanism now to be described in greater detail.

In the particular vehicle 10 shown in FIGS. 1 to 10 of the accompanying drawings, the tilting drive mechanism includes the aforementioned double-acting hydraulically operated cylinder 96 which is pivotally mounted at 97 on the chassis 11. A cylinder rod 99 extends generally rearwardly and upwardly from the cylinder 96 and is pivotally connected as indicated at 101 to a bracket 105 on the refuse-receiving receptacle 26 forwardly of the pivot means including the pivot pins 107 already described herein.

It will be understood that, in order to be operative to move the refuse-receiving receptacle 26 between its loading and dumping positions, the cylinder rod 99 must be operative to apply an upwardly and rearwardly directed force to the receptacle 26 when the latter is in its generally horizontal loading position. For this purpose, the cylinder 96 extends rearwardly and at a small angle upwardly when the receptacle 26 is in its loading position.

It will further be understood that the hydraulic cylinder 96 will be provided with appropriate hoses (not shown) connected to a suitable source of pressurized hydraulic fluid and that appropriate valves or other controls will be provided for controlling the supply of hydraulic fluid to this cylinder 96 and for controlling the discharge of such hydraulic fluid therefrom.

A modified refuse vehicle 126 is shown in FIG. 11, this vehicle being similar to the vehicle 10 already described but with certain modifications. Structural components which are the same in the two vehicles are identified with the same legends. A flexible cover 128 in the vehicle 126 is suitably affixed to the upper edge of the loading plunger 30 but has an intermediate portion extending over a roller 130 mounted in an elongate, vertical housing 132 disposed forwardly of the loading chamber 22. The roller 130 is rotatably carried by a pair of end plates 134 which are supported by springs 136 and adjustable hangers 138. The cover 128 extends over the roller 130 and is suitably affixed to a lower forward edge 140 of the elongate housing 132. With this arrangement, the overall height of the space required for the cover 128 can be reduced with the springs 136 merely extending and retracting when the loading plunger 30 moves between its extended and retracted positions.

When the refuse-compacting plunger 52 moves downwardly, it will sometimes compress larger pieces of refuse which are partially supported on the floor of the loading chamber 22. This will cause the refuse-receiving receptacle 26 to tend to rise as force is exerted by the plunger 52 through the refuse and onto the stationary portion of the vehicle. To overcome this, a pair of holddown hooks 142 are located on each side of the vehicle. The hooks are supported on a shaft 144 extending across the vehicle and operated by a suitable crank or handle 146. The hooks 142 normally engage latch pins 148 and are released by the crank 146 only when the refuse-receiving receptacle 26 is to be elevated into its tilted dumping position.

The refuse-receiving receptacle 26 of the vehicle 126 shown in FIG. 11 is pivotally mounted on the chassis 11 of that vehicle in the same manner as already described herein with reference to the vehicle 10 of FIGS. 1 to 10.

A refuse vehicle in accordance with the present invention can also be in the form of a trailer, as indicated at 162 in FIG. 12, rather than a complete truck having its own power drive. The vehicle or trailer 162 can be towed to a desired location where it is left to receive refuse for a suitable period, such as a week, at which time it can be towed to a refuse dump and emptied. The trailer 162 can be used advantageously in application such as hospitals, apartment house projects, and military barracks, by way of example. A principal advantage is that one towing vehicle can be employed with a relatively large number of the trailers which are substantially less expensive than a complete motorized vehicle.

The trailer 162 includes a supporting frame or chassis 164 having a tongue 166 carrying a trailer hitch 168. The frame 164 is supported on two pair of rear wheels 170 and is equipped with a retractable front support 172 of a conventional type. The trailer further employs the refuse-receiving receptacle 26 similar to the receptacle 26 of the vehicles 10 and 126 of the preceding figures and employs the secondary refuse-compacting plunger 52 and the loading chamber 22, as well as the loading plunger 30 to achieve a high degree of compaction and a large capacity for the receptacle 26. A housing 174 carries the flexible cover 128, the housing 174 slanting forwardly, in this instance, to provide a larger area for dumping garbage cans or other receptacles into the loading chamber 22 since there is no vehicle cab which would otherwise interfere with the housing in this position.

The trailer 162 also carries its own power drive system for operating the cylinders of the loading plunger 30 and the refuse-compacting plunger 52. This drive system is also used for operating a dump cylinder 176 for the refuse-receiving receptacle 26 and a door cylinder 178 for the dumping door 104. The power drive system includes a reservoir tank 180 and a pump 181 driven by a motor 182 which has an electrical plug 184 which can be connected to a suitable power source at the site at which the trailer 162 is to be located.

To permit the trailer 162 to be towed to a garbage dump to be emptied, the power drive system also includes hoses 186 and 188 having quick-disconnect couplings 189 for connecting the power system to a pump provided on the towing vehicle, which pump is conveniently connected to and powered by a power takeoff shaft of the towing vehicle engine. When the trailer 162 reaches the dump, the door cylinder 178 and the tilting cylinder 176 can then be operated by means of such pump to effect dumping of refuse from the receptacle 26.

The power system for the trailer 162 is shown diagrammatically in FIG. 13. Hydraulic fluid from the reservoir 180 is supplied by the pump 181 driven by the motor 182 to a four-way valve 190 which controls the dumping cylinder 176. The fluid is also supplied to a four-way valve 192 which controls the door cylinder 178. A hand-operated valve 193 controls flow of fluid to a pressure-responsive valve 194 which in turn supplies fluid to the cylinder 34 for the loading plunger 30 and the cylinder 54 for the refuse-compacting plunger 52. In the position shown for the valve 194, fluid is supplied to the blind end of the cylinder 34 to extend the loading plunger 30 carried by the cylinder rod 36. When the pressure in the line reaches a predetermined value, e.g., 1,450 p.s.i., a pressure-sensitive valve 196 is actuated to supply fluid to the blind end of the cylinder 54 to extend the refuse-compacting plunger 52 carried by the cylinder rod 56 until the fluid pressure in the left-hand line reaches a predetermined higher value, e.g., 1,600 p.s.i., at which time the valve 194 shifts and supplies fluid to the right-hand line. Fluid is then supplied to the rod ends of both cylinders 36 and 54 to retract both the plungers 30 and 52, with fluid from the cylinder 54 bypassing the valve 196 through a check valve 198. When the pressure in the right-hand line reaches 1,300 p.s.i., for example, after the plungers 30 and 52 have been retracted, the valve 194 switches automatically to cycle the plungers once again, the cycle continuing as long as the motor 182 is operating. Fluid is returned to the reservoir 180 through a main check valve 200. A relief valve 202 is located to recirculate fluid back to the reservoir 180 when supply pressure reaches a predetermined value.

The lines **186** and **188** are shown schematically on opposite sides of the pump **181** to provide the connection to lines of a pump on the towing vehicle when the hydraulic system of the vehicle **162** is to be operated thereby.

What I claim is:

1. A refuse-collecting apparatus comprising:

a supporting frame;

a refuse-receiving receptacle having a forward feed end and a rear discharge end and pivotally mounted by a pivot means on said supporting frame in proximity to said rear discharge end thereof for tilting movement of said receptacle between a generally horizontal position and a tilted dumping position;

a loading aperture in said forward feed end of said receptacle for the transfer of refuse into said receptacle;

a loading chamber disposed on said supporting frame forwardly of said feed end of said refuse-receiving receptacle so as to be adjacent said loading aperture when said receptacle is disposed in said generally horizontal position thereof;

a loading plunger with in said loading chamber for rearward and forward movement toward and away from said loading aperture respectively for pushing refuse through said loading aperture;

a loading plunger drive mechanism for effecting said movement of said loading plunger toward and away from said loading aperture, said pivot means being generally transversely disposed and pivotally interconnecting said supporting frame and said refuse-receiving receptacle and including transversely spaced apart pivot plates and associated transversely extending pivot pins, each said pivot plate having an elongated slot extending rearwardly relative to said supporting frame when said receptacle is disposed in said generally horizontal position thereof whereby, on movement of said pivot pins along said elongated slots, said refuse-receiving receptacle is moved longitudinally relative to both said supporting frame and said loading chamber out of sealing engagement with said loading chamber prior to said pivotal movement of said receptacle from said generally horizontal position to said tilted dumping position thereof; and

a tilting drive mechanism operatively interconnecting said supporting frame and said refuse-receiving receptacle and operative to apply an upwardly and rearwardly directed force to said receptacle forwardly of said pivot means for moving said receptacle into said tilted dumping position thereof and to apply an oppositely directed force to said receptacle for moving said receptacle into said generally horizontal position thereof and into sealing engagement with said loading chamber.

2. A refuse-collecting apparatus as claimed in claim **1** in which said elongated slot in each said pivot plate extends rearwardly and upwardly relative to said supporting frame when said refuse-receiving receptacle is disposed in said generally horizontal position thereof.

3. A refuse-collecting apparatus as claimed in claim **2** which apparatus additionally includes a releasable locking means for releasably retaining said refuse-receiving receptacle in said generally horizontal position thereof.

4. A refuse-collecting apparatus as claimed in claim **3** in which said tilting drive mechanism is itself adapted to urge said refuse-receiving receptacle into sealing engagement with said loading chamber after operation of said tilting drive mechanism to move said refuse-receiving receptacle into said generally horizontal position thereof.

5. A refuse-collecting apparatus as claimed in claim **4** which additionally includes a sealing means between said loading chamber and said refuse-receiving receptacle for effecting sealing engagement between said refuse-receiving receptacle and said loading chamber when said receptacle is disposed in said generally horizontal position thereof.

6. A refuse-collecting apparatus as claimed in claim **3** which apparatus additionally comprises a refuse-compacting plunger disposed within said refuse-receiving receptacle for generally vertical reciprocating movement therein across said loading aperture, in which said loading plunger, said refuse-compacting plunger and said tilting drive mechanism are hydraulically operated, and in which said releasable locking means includes releasable means adapted to prevent tilting movement of said refuse-receiving receptacle relative to said supporting frame when said refuse-receiving receptacle is disposed in its forwardmost generally horizontal position on said supporting frame.

* * * * *