May 2, 1950 A. C. GROHSGAL 2,506,212

MULTIUNIT ELECTRICAL OUTLET CONSTRUCTION

Filed Jan. 5, 1948 2 Sheets-Sheet 1

Fig. 1.

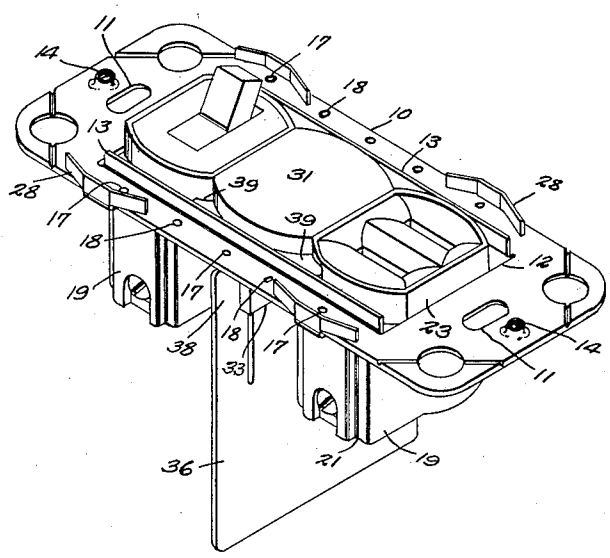

Fig. 2.

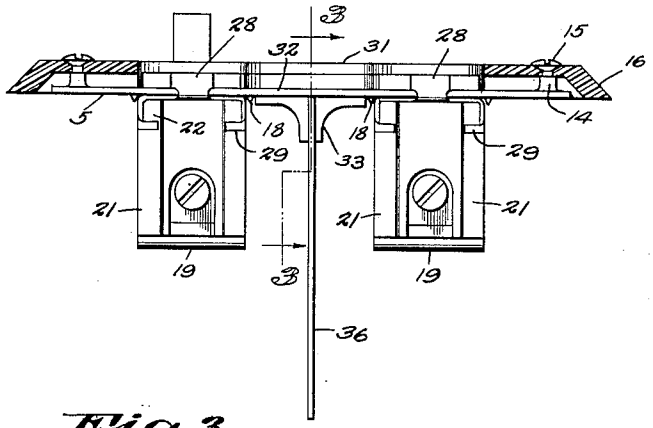

Fig. 3.

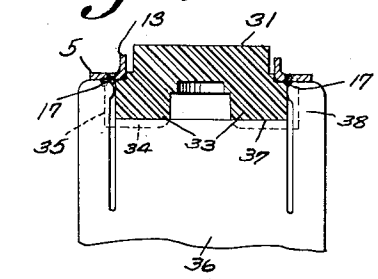

A. C. Grohsgal

INVENTOR

BY C. A. Snow & Co.

ATTORNEYS.

May 2, 1950 A. C. GROHSGAL 2,506,212

MULTIUNIT ELECTRICAL OUTLET CONSTRUCTION

Filed Jan. 5, 1948 2 Sheets-Sheet 2

Fig. 4.

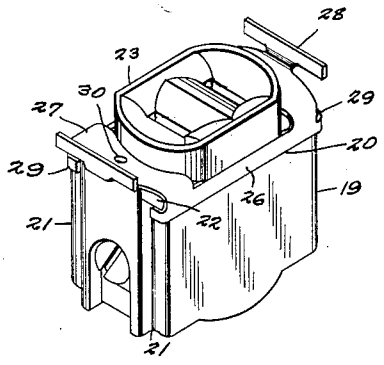

Fig. 8.

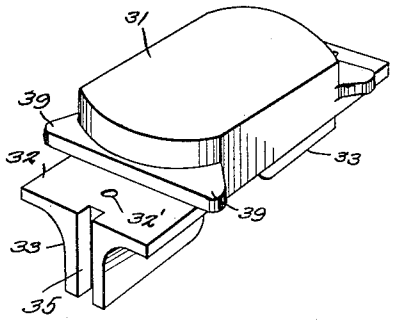

Fig. 5.

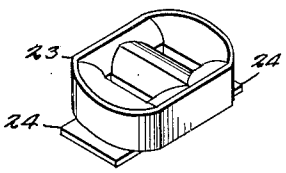

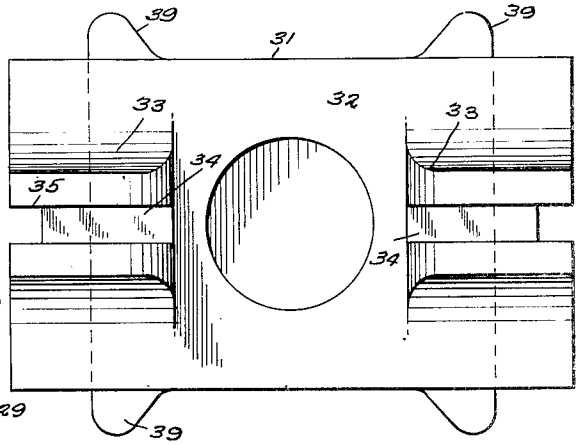

Fig. 6.

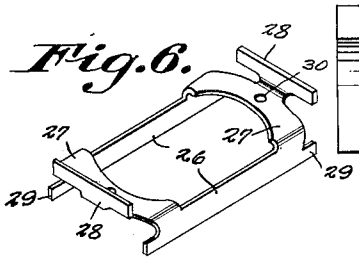

Fig. 9.

Fig. 7.

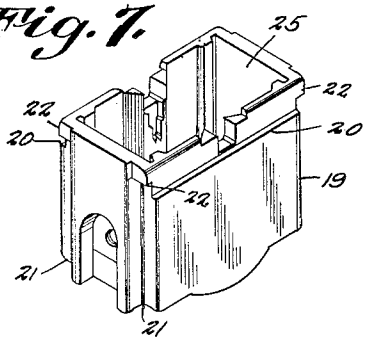

A. C. Grohsgal

INVENTOR

BY C. A. Snow & Co.

ATTORNEYS.

Patented May 2, 1950

2,506,212

UNITED STATES PATENT OFFICE

2,506,212

MULTIUNIT ELECTRICAL OUTLET CONSTRUCTION

Alexis C. Grohsgal, New York, N. Y., assignor to Cable Electric Products, Inc., Brooklyn, N. Y.

Application January 5, 1948, Serial No. 519

6 Claims. (Cl. 174—53)

1

This invention relates to the construction of a multi-unit electrical outlet. More particularly, the invention relates to electrical wiring apparatus for houses and buildings wherein a plurality of wiring devices, such as switches, receptacles, indicating lamps, and the like, are arranged in the space usually alloted to a single device of such character, and wherein interchangeability of the devices provide for ready assembly of any desired combination thereof in a single outlet box.

Multi-unit apparatus of the general character described is not in and of itself a new development in the art. However, it is a matter of basic importance that the replacement of one type of wiring device by another be accomplished with the utmost ease and speed, so as to give full effect to the interchangeability features of apparatus of the character described. Often, it is necessary that the replacement be accomplished by inexperienced persons lacking in technical knowledge, and it is thus a worthy aim to so form the apparatus as to reduce the number of separable parts to an absolute minimum, and to permit easy assembly and disassembly thereof.

Closely related to the above aim is the desire of any manufacturer to reduce the number of assembly operations, and to permit such operations to be carried on with more facility and speed than has previously been the case. In this way, the cost of manufacture is capable of being materially reduced, thus benefitting both manufacturer and consumer.

It may, therefore, be stated as the main object of the present invention that it is intended to provide a novel construction, for multi-unit electrical apparatus that will permit easier and faster assembly and disassembly of the wiring devices, thus to give greater effect to the interchangeable features thereof; to reduce the number of separable parts; and to provide, in a device meeting these aims, apparatus which is inexpensive as to manufacturing cost, and yet of great strength and durability.

In its broadest aspects, the invention embodies a construction wherein a novelly formed clamp member is readily assembled with a wiring device such as a switch, receptacle, or pilot light, to state a few examples; wherein a bridge is novelly formed to permit the clamp member to be swiftly placed in exact registration therewith and wherein, further, the clamp member, after having been registered with the bridge, is supported to the bridge by a novel lug arrangement that permits speed of assembly and disassembly

2

without detracting from the strength of the assembled parts. Continuing, the invention embodies additionally a blank of novel formation, to which a barrier can be readily secured, the blank being used to take up the space normally occupied by a wiring device, where such device is not needed.

With the foregoing and other objects in view which will appear as the description proceeds, the invention consists of certain novel details of construction and combinations of parts, hereinafter more fully described and pointed out in the claims, it being understood that changes may be made in the construction and arrangement of parts without departing from the spirit of the invention as claimed.

Referring to the drawings:

Figure 1 is a perspective view of a multi-unit electrical outlet formed and assembled in accordance with the invention.

Figure 2 is a side elevational view, a wall plate to which the unit is attached being illustrated in longitudinal section.

Figure 3 is a transverse section through the blank, taken substantially on line 3—3 of Figure 2.

Figure 4 is a perspective view of a wiring device assembled with its clamp member.

Figure 5 is a perspective view of the facing of said wiring device.

Figure 6 is a perspective view of the clamp member prior to being assembled with the wiring device.

Figure 7 is a perspective view of the housing of the wiring device.

Figure 8 is a perspective view of the blank.

Figure 9 is a bottom plan view of said blank.

Referring to the drawings in detail, 10 designates a bridge which is readily formed from a flat metal stamping. In the present instance, the bridge 10 is rectangular in outer conformation, and in most cases, this would be its shape, although as will be obvious, this particular configuration is not critical to the invention.

Formed in the bridge 10 near its ends are openings 11, adapted to receive screws, not shown, by means of which the entire unit can be mounted in an outlet box, also not shown. The bridge 10 is also formed with a single large central opening 12, through which the upper portions of the various wiring devices extend. The longitudinal edges of this opening are turned upwardly so as to define side flanges 13.

Also formed in the ends of the bridge are threaded openings 14, receiving screws 15, where-

by the assembled unit is connected to a wall plate 16.

Extended longitudinally of bridge 10 adjacent the opposed side flanges 13 are small spaced projections 17, 18. These projections are on the under side of the bridge, and are readily formed by punching at the time the bridge is stamped out. The purpose of these projections, as will be described in more detail hereinafter, is to permit swift and accurate positioning of the wiring devices in their proper positions with respect to the bridge to which they are to be supported.

In apparatus of this type, a plurality of wiring devices are assembled removably and interchangeably in a unit capable of being mounted in a single outlet box. As an example, I have illustrated in Figure 1 a switch and a receptacle, separated in the present instance by a blank member. These are so illustrated purely for the sake of example, and any combination of suitable wiring devices can be used.

The reference numeral 19 designates a wiring device housing. Longitudinal shoulders 20 extend from end to end of each side wall of the housing. The housing also has indented corners 21 the indentations terminating just short of the top edge of the housing, so as to define corner abutments 22.

A wiring device facing 23 is of suitable type, and has tongues 24 extending from either end thereof. When facing 23 is assembled with housing 19, tongues 24 engage the inner surfaces of the end walls 25 of the housing, at the top of said end walls.

A clamp member (Figure 6) is stamped to shape, and has downturned side flanges 26 connected by cross members 27, these defining an opening receiving facing 23. The facing is inserted diagonally through said opening, so that tongues 24 underlie cross members 27, while the sides of the facing overlie the flanges 26.

Integral with the cross members 27 are upturned lug strips 28. The side flanges 26 are extended beyond the cross members so as to provide ears 29 at each corner of the clamp member. The clamp member is completed by formation of openings 30 in the cross members 27, at both ends of the clamp member.

As indicated above, the facing 23 is readily assembled with the clamp member simply by diagonal insertion through the large central opening of said member. Then, the assembled parts are assembled with the housing 19 as illustrated in Figure 4. This is accomplished simply by positioning these assembled parts upon the housing. The various parts are swiftly registered by tongues 24 engaging end walls 25, and by the side flanges 26 engaging shoulders 20. The operation is completed by turning ears 29 inwardly into the indentations 21, whereupon the abutments 22 will prevent disassembly of the parts.

A wiring device so constructed is suported to bridge 10 simply by placing it against the bridge, and pressing the ends of lug strips 28 inwardly as illustrated in Figure 1. Prior to connecting the wiring device to the bridge in this manner, the wiring device is swiftly and accurately positioned in its proper location by projections 17 or 18 entering openings 30 of the clamp member.

No special tools are required to connect the parts, or for that matter, to disassemble them. Thus, the assembly of a unit of the type stated is readily accomplished swiftly and accurately by inexperienced persons.

It may be noted as a characteristic of the invention that a single bridge 10 is adapted to support either a two-unit or a three-unit type of interchangeable outlet apparatus. In the illustrated example, a three-unit type is shown (it being understood that the blank member in the center could be removed in favor of a wiring device). In this case, the projections 17 are used. However, an identically formed bridge could be used for supporting a two-unit type, by employment of the projections 18. This would be a contributing factor toward the reduction of manufacturing costs, since all bridges can be identically formed for two- and three-unit devices.

In Figures 8 and 9, there is illustrated a blank member 31 used for a purpose previously stated. This is preferably molded integrally, for plastic material or the like. As readily seen it includes a facing disposed above a base 32 adapted to underlie bridge 10, with the facing projecting, of course, through the central opening 12 of the bridge. Base 32 has recesses 32' disposed in its upper surface at opposite ends thereof, these being adapted to receive either projections 17 or 18 as the case may be.

Integral with base 32 are depending end portions 33. Longitudinally aligned bottom slots 34 are formed in the end portions, and end slots 35 are also formed in said portions. At 36 is illustrated a barrier in one end of which is formed a large indentation 37 that defines side legs 38. Thus, legs 38 are readily pressed into slots 35, while the bottom edge of the indentation 37 is received in slots or grooves 34.

The blank member 31 is also formed with ears 39 at its respective corners, disposed just above the base 32. Referring to Figure 1, it may be noted that a blank member can be readily interposed between two wiring devices by simply positioning ears 39 above the ends of the cross members 27 of the clamps of said devices. In this way, the blank member 31 is supported by the devices at its opposite sides and thus held assembled with the bridge.

What is claimed is:

1. In a multi-unit single-gang outlet construction, a bridge having an opening, wiring devices disposed within the opening, clamp members on said devices, extensions integral with the opposite ends of each clamp member upturned to embrace between them the opposite sides of the bridge, and lugs extending from the sides of said extensions and inbent over opposed side edges of the bridge.

2. In a multi-unit single-gang outlet construction, a bridge having an opening, wiring devices disposed within the opening, clamp members on said devices, extensions integral with the opposite ends of each clamp member upturned to embrace between them the opposite sides of the bridge, lugs extending from the sides of the extensions and inbent over opposed side edges of the bridge, and means for registering the devices with the bridge in selected locations within the opening, said means comprising spaced downwardly extended projections formed on the under surface of the bridge, each clamp member underlying the bridge and having projection receiving recesses.

3. In a multi-unit single-gang outlet construction, a bridge having an opening, wiring devices disposed within the opening, clamp members on said devices, extensions integral with the opposite ends of each clamp member upturned to embrace between them the opposite sides of the

bridge, lugs extending from the sides of the extensions and inbent over opposed side edges of the bridge, and means for registering the devices with the bridge in selected locations within the opening, said means comprising spaced downwardly extended projections formed on the under surface of the bridge, each clamp member underlying the bridge and having projections receiving recesses, adjacent projections being spaced apart a distance equal to half the width of a wiring device, and said recesses being disposed medially of the sides of a wiring device, thus to permit centering to a bridge of both even and odd numbers of devices,

4. In a construction for a bridge-supported wiring device, a housing having an open front and corner projections, a clamp member overlying the front of the housing, ears integral with the clamp member at the corners thereof and deformable under the corner projections, a facing closing the front of the housing and including end tongues engaged under the ends of the clamp member, and upturned end extensions on the clamp member adapted to embrace opposed side edges of a bridge.

5. Means for supporting a wiring device to a bridge comprising a clamp member in the form of an integral stamping, said stamping including upturned extensions at opposite ends thereof, a pair of wing-like lugs extending from the sides of each extension and adapted to be inturned over a bridge, down turned side flanges on the

clamp member and ears on the opposite ends of each side flange adapted for gripping a wiring device housing.

6. In a multi-unit single-gang outlet construction, a bridge having one aperture for a plurality of wiring devices, wiring devices having their facings extended through the aperture, each wiring device including a clamp member underlying the bridge and engaging portions of the wiring device against separation, downwardly extended projections struck from the bridge, said clamp members having openings receiving said projections for registering the wiring devices in the aperture, and end extensions integrally formed on each clamp member upturned to embrace between them the opposite side edges of the bridge, each end extension including wing-like lugs deformable inwardly to extend over the upper surface of the bridge to support the wiring devices thereto.

ALEXIS C. GROHSGAL.

REFERENCES CITED

The following references are of record in the file of this patent:

UNITED STATES PATENTS

Number	Name	Date
1,875,224	Despard	Aug. 20, 1932
1,998,353	Bennett	Apr. 16, 1935
2,160,713	Bentley	May 30, 1939