(No Model.)

H. COCHRAN.

REVERSIBLE SIGN.

No. 455,919. Patented July 14, 1891.

Fig. 1.

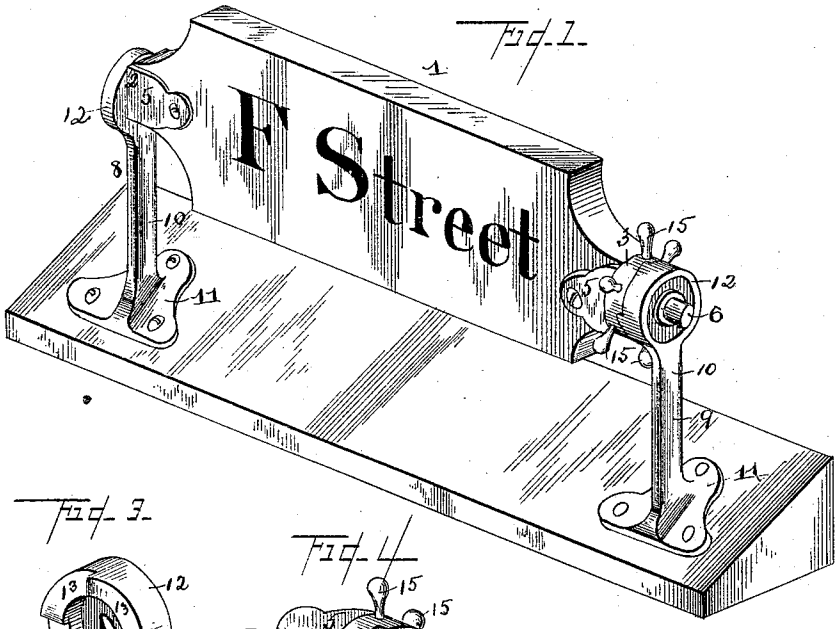

Fig. 3.

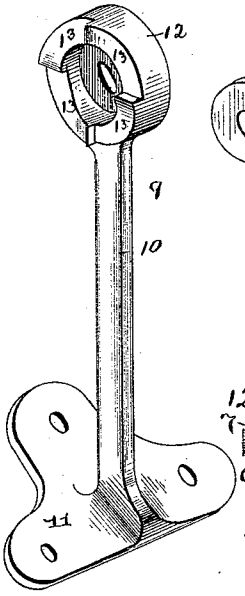

Fig. 4.

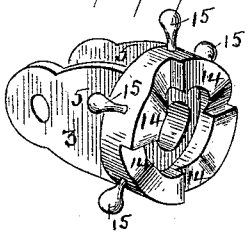

Fig. 2.

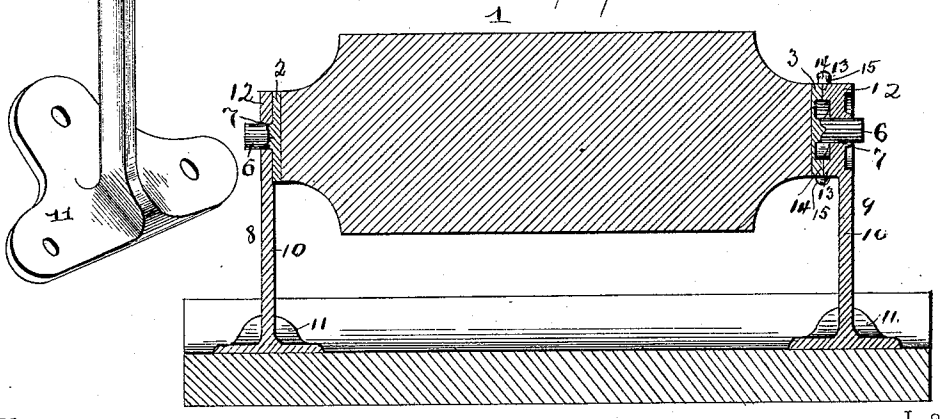

Witnesses
H. S. Betts
N. F. Riley

Inventor
Henry Cochran.

By His Attorneys,
C. A. Snow & Co.

THE NORRIS PETERS CO., PHOTO-LITHO., WASHINGTON, D. C.

UNITED STATES PATENT OFFICE.

HENRY COCHRAN, OF CHESTER, PENNSYLVANIA.

REVERSIBLE SIGN.

SPECIFICATION forming part of Letters Patent No. 455,919, dated July 14, 1891.

Application filed March 27, 1891. Serial No. 386,588. (No model.)

To all whom it may concern:

Be it known that I, HENRY COCHRAN, a citizen of the United States, residing at Chester, in the county of Delaware and State of Pennsylvania, have invented a new and useful Reversible Sign, of which the following is a specification.

The invention relates to improvements in signs.

The object of the present invention is to provide for street-cars, coaches, and the like a sign adapted to be adjusted or reversed to present different faces as the route of the vehicle is changed.

A further object of the invention is to prevent the sign rattling and shaking during the passage of the vehicle.

The invention consists in the construction and novel combination and arrangement of parts hereinafter fully described, illustrated in the accompanying drawings, and pointed out in the claims hereto appended.

In the drawings, Figure 1 is a perspective view of a sign constructed in accordance with this invention. Fig. 2 is a longitudinal sectional view of the same. Fig. 3 is a detail view of one of the brackets. Fig. 4 is a detail perspective view of one of the end castings.

Referring to the accompanying drawings, 1 designates a sign designed to be employed on street-cars, coaches, and similar vehicles, and adapted to be rotated to present different faces to indicate different routes over which a vehicle may be traveling and provided at its ends with castings 2 and 3, and the said sign may be a simple board and be provided with two faces and be adapted to be reversed to present either face to the outside, or it may be of some regular shape in cross-section, such as triangular, square, pentagonal, or other polygonal form. The end castings 2 and 3 are provided with parallel perforated ears 5, extending inward and forming recesses, and adapted for the reception of the ends of the sign 1, and they are secured to the same by bolts or the like, and extending outward from the end castings are integral journals 6, which are received in bearing-openings 7 of the brackets 8 and 9. The brackets 8 and 9 consist of a shank 10, a plate 11, formed integral with the shank and arranged at the inner end thereof and provided with perforations adapted for the reception of screws or the like, whereby the bracket is secured to the side of a car or other suitable supporting-surface, and a disk 12, arranged at the outer end of the shank and formed integral therewith and provided with the bearing-openings 7 to receive the journal of the adjacent end casting. The disk 12 of the bracket 9 is provided on its inner face with teeth 13, which engage corresponding depressions 14 of the end casting 3 and form with the same a ratchet, adapted to hold the side rigidly against rotation during the passage of the car and adapted to permit the sign to be rotated by hand when desired, and the end casting 3 is provided with a series of knobs 15, extending radially from the casting and adapted to be readily grasped by the hand when desired. When a simple board 1 is employed, the number of ratchet-teeth is immaterial; but they should be arranged to allow the sign to assume an upright or slightly-slanting position, as desired, and when signs having more than two faces are employed the number of ratchet-teeth should correspond with the number of faces of the signs and should be arranged to enable any one of the faces to be exposed in the desired position, as will be readily understood. The spring of the metal is sufficient to enable the sign to turn and the ratchet-faces to pass each other, and it is also sufficient to hold the sign perfectly rigid when not moved by hand, and it will be seen that no springs are employed and that all liability to rattle and shake during the passage of a car is avoided.

It will readily be seen that the sign is simple and inexpensive in construction, adapted to be readily adjusted to present different faces, and is noiseless and not liable to become inoperative by the strains incident to its use.

What I claim is—

1. The combination of the brackets provided with bearing-openings, one of the brackets having a ratchet-face, the sign, the end casting 2, secured to one end of the sign and provided with a journal arranged in the bearing-opening of the adjacent bracket, and the end casting 3, secured to the other end of the sign and provided with a journal and having a ratchet-face arranged to engage the said

ratchet-face of the bracket, substantially as described.

2. The combination of the brackets 8 and 9, comprising a shank, a plate arranged at the inner end of the shank, and a disk arranged at the outer end of the shank and provided with bearing-openings, the bracket 9, having its disk provided with a ratchet-face, the end castings 2 and 3, provided with journals engaging the bearing-openings of the brackets, the end casting 3 being provided with a ratchet-face arranged to engage the ratchet-face of the bracket 9 and having radial knobs or handles, and the sign, substantially as described.

3. The combination of the reversible sign-board 1, the end castings 2 and 3, having parallel ears to receive the ends of the sign-board and provided with journals, the end casting 3 having a ratchet-face and provided with radial knobs or handles, and the brackets 8 and 9, comprising a shank, a plate at the inner end of the shank, and a disk at the outer end of the shank, having a bearing-opening, the bracket 9 having its disk provided with a ratchet-face, substantially as described.

In testimony that I claim the foregoing as my own I have hereto affixed my signature in presence of two witnesses.

HENRY COCHRAN.

Witnesses:
BENJ. F. RILEY,
I. E. COCHRAN, Jr.