June 14, 1927. 1,632,639

A. WEISE

POCKET UMBRELLA

Filed Feb. 25, 1925

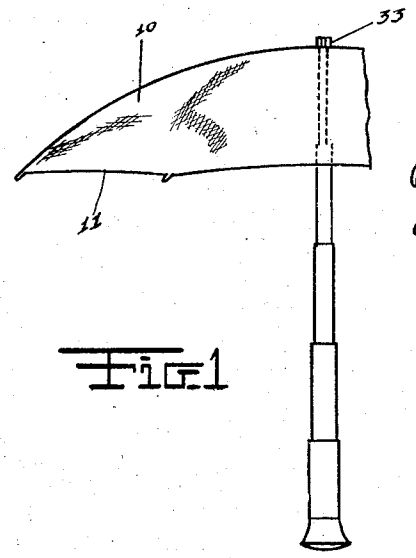

Fig. 1

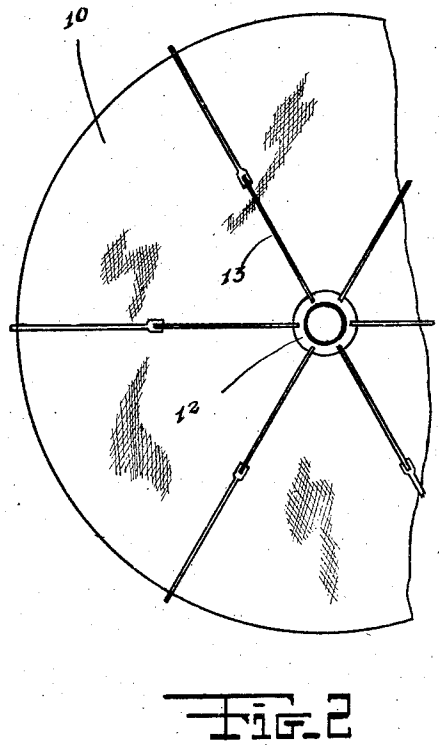

Fig. 2

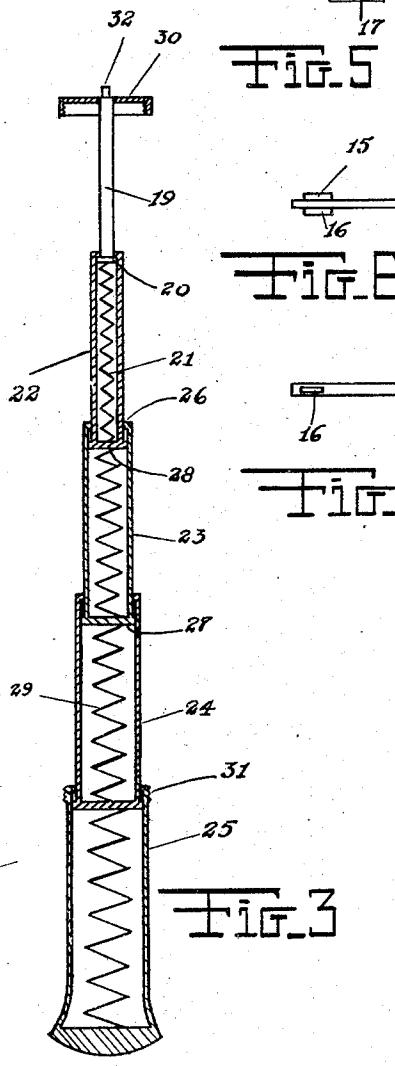

Fig. 3

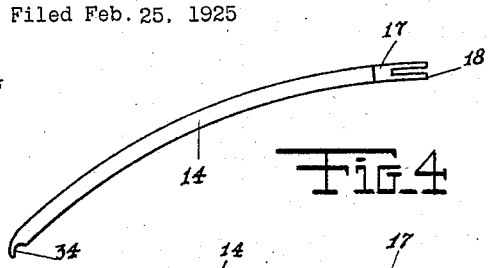

Fig. 4

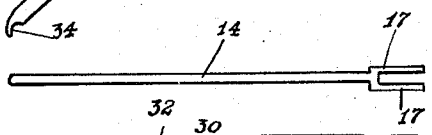

Fig. 5

Fig. 6

Fig. 7

INVENTOR
A. Weise

BY J. Lederman
ATTORNEY

Patented June 14, 1927. 1,632,639

UNITED STATES PATENT OFFICE.

ALFRED WEISE, OF NEW YORK, N. Y.

POCKET UMBRELLA.

Application filed February 25, 1925. Serial No. 11,387.

The main object of this invention is to provide an umbrella, which when not in use, may be folded and stored in the pocket.

The above and other objects will become apparent in the description below, in which characters of reference refer to like-named parts in the drawing.

Referring briefly to the drawing, Figure 1 is a fragmentary front elevational view of the umbrella when in used position.

Figure 2 is a bottom plan view of Figure 1.

Figure 3 is a longitudinal sectional elevational view of the umbrella stem in extended position.

Figure 4 is a front elevational view of the member forming the rib.

Figure 5 is a top plan view of the same.

Figure 6 is a top plan view of the opposite interlocking rib member.

Figure 7 is a side elevational view of the same.

Referring in detail to the drawing, the numeral 10 indicates the cloth covering of the umbrella. This cloth covering when stretched over the ribs of the umbrella frame takes the shape of a circular inverted dish from which the water drains and falls from its circular edge 11. At the axis of the umbrella coupling, a ring 12 is positioned, to which the inner ends 13 of articulated rib sections are pivotally secured. These ribs which shape the umbrella, as stated, are formed in two sections, inner sections 13, and outer sections 14. The inner sections 13 of the ribs have a pair of keys 15 and 16 projecting from their sides. The ends of the outer sections 14 are provided with bifurcated ends whose arms 17 have slots 18 formed therein into which it is adapted to insert the keys 15 and 16 of the inner rib sections so as to interlock the sections 13 and 14. The handle, or stem, of the umbrella is formed of a plurality of telescoping sections, the upper one 19 being a solid and having a flanged head 20 at its lower end which is slidably mounted in a channel 21 by a tubular member 22. Additional tubular members 23, 24, and 25, are successively mounted and slidable within each other, and each of these tubular members 22, 23, 24, and 25, have internal shoulders at their upper ends, and external shoulders 27 at their lower ends which are adapted to abut against each other and retain adjacent tubular members from becoming detached from each other. Each of the tubular members is also provided with a floor 28 which closes the lower ends, and upon these floors, coil springs 29 are seated, these springs being adapted to lie between the floor of the tube in which they are mounted and the floor of the tube slidable in the adjacent tube, and lift the internal tube upwardly to extend both sections to their full limit. At the upper end of the handle extension 19, a threaded cap 30 is securely mounted and engages the threads 31 formed on the upper edge of the periphery of the largest tubular section 25. A threaded stud 32 extends from the upper end of the rod 19 and is adapted to be engaged by a nut 33 in order to secure the ring 12 in place on the surface of the cap 30 when the umbrella is assembled for use.

The umbrella is adapted to be completely folded and carried in the pocket of the person. When the handle is in folded position, the section 25 houses all the telescoped sections 24, 23, 22, and 19, and the cap 30 by engaging the threads 31 of the largest tubular section 25, retains these tubular sections 22, 23, and 24, within the larger tubular section 25. As it is desired to extend the handle, the cap 30 is unscrewed from the tubular section 25 and the springs 29 within the tubular sections 25, 24, 23, and 22, extend these sections by urging the floor of the tubular section above the individual spring upwardly into the position shown in Figure 3. The ring 12, which has the inner rib sections 13 pivotally secured thereto, is then seated upon the face of the cap 30, and the nut 33 is screwed down on the stud 32 to secure the ring 12 in place on the extended handle of the umbrella. To the keys 15 and 16 of each of the rib sections, a member, as illustrated in Figures 4 and 5, is previously attached. These members 14 are provided with bifurcated ends in which slots 18 are provided, the slots being adapted to fit over the keys 15 and 16, and thus articulated ribs of two sections and collapsible, are formed. The outer ends of the rib sections 14 are provided with dull hooks 34 which are inserted into eyelets formed at spaced-apart positions on the periphery of the umbrella covering 15 and are secured in this manner to the covering. The pivoting of inner rib sections 13 on ring 12 permits the attachment of outer ribs 14, with hooks 34 inserted in the eyelets of covering 15, or, the outer

ribs 14, if desired, may first be attached to inner ribs 13 and the covering 15 stretched until the eyelets snap into position over the hooks 34. Since ring 12 is smaller than cap 30, screwing down of nut 33 ensures rigid positioning of rib sections 13 and therefore of the umbrella top.

I claim:

An umbrella of the class described comprising a covering, articulated ribs supporting said covering, a ring retaining the ribs in radial positions around an axis, a handle comprising telescoping tubular sections, the upper section comprising a rod, said tubular sections having external flanges at their lower ends, and a floor at said lower ends, the lowermost tubular section having threads at its upper end, a cap on the upper end of said rod adapted to engage the threads of the lowermost tubular section to lock said tubular sections in telescoped position, one within the other, internal shoulders on the upper ends of the tubular sections, and springs mounted on the floors within the tubular sections adapted to extend the tubular section above the section in which the spring is mounted.

In testimony whereof I affix my signature.

ALFRED WEISE.