(12) UK Patent Application (19) GB (11) 2 254 945 (13) A

(43) Date of A publication 21.10.1992

(21) Application No 9108439.2

(22) Date of filing 19.04.1991

(51) INT CL[5]
F23D 14/72

(52) UK CL (Edition K)
G4N NHBS N9E5D

(56) Documents cited
GB 2196459 A GB 1442745 A WO 86/05860 A1

(58) Field of search
UK CL (Edition K) G4N NHBS
INT CL[5] F23D, F23N
WPI

(71) Applicant
British Gas plc

(Incorporated in the United Kingdom)

Rivermill House, 152 Grosvenor Road,
London, SW1V 3JL, United Kingdom

(72) Inventor
David Michael Sutton

(74) Agent and/or Address for Service
David J Morgan
British Gas Plc, Intellectual Property Department,
326 High Holborn, London, WC1V 7PT,
United Kingdom

(54) Thermoelectric sensor for a gas burner

(57) The thermoelectric sensor assembly 1 is for use with a flamestrip 9 in a fuel gas burner. The sensor assembly may be in the form of a probe 2 having temperature sensors 5a, b, c, d downstream of the flamestrip 9 in and adjacent the flame region, and temperature sensors 6a, b, c upstream of the flamestrip. A voltage output signal from the sensor assembly is used as an indication of the aeration of the flame and/or of flame established and/or flame failure or lift-off and/or flame lightback.

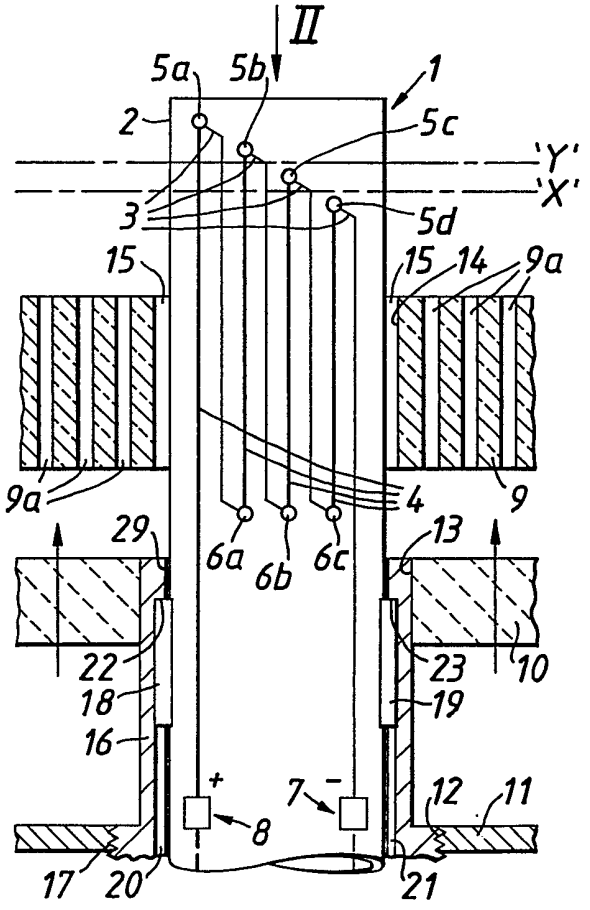

FIG. 1.

GB 2 254 945 A

At least one drawing orignally filed was informal and the print reproduced here is taken from a later filed formal copy.

FIG. 1.

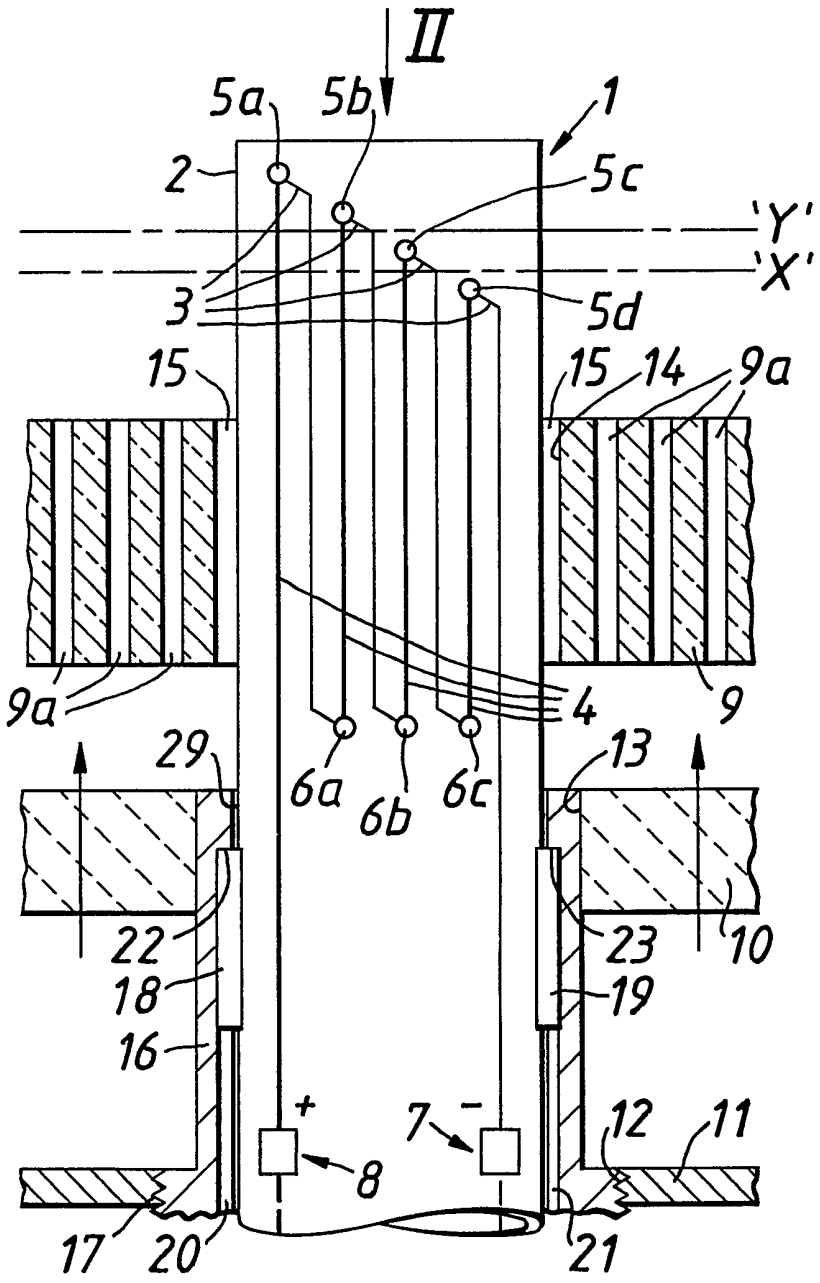
II
5a
5b
1
2
5c
'Y'
'X'
3
5d
15
15
14
9a
9a
9
4
29
6a
6b
6c
13
22
23
10
18
19
16
+
7
−
12
11
8
17
20
21

FIG.2.

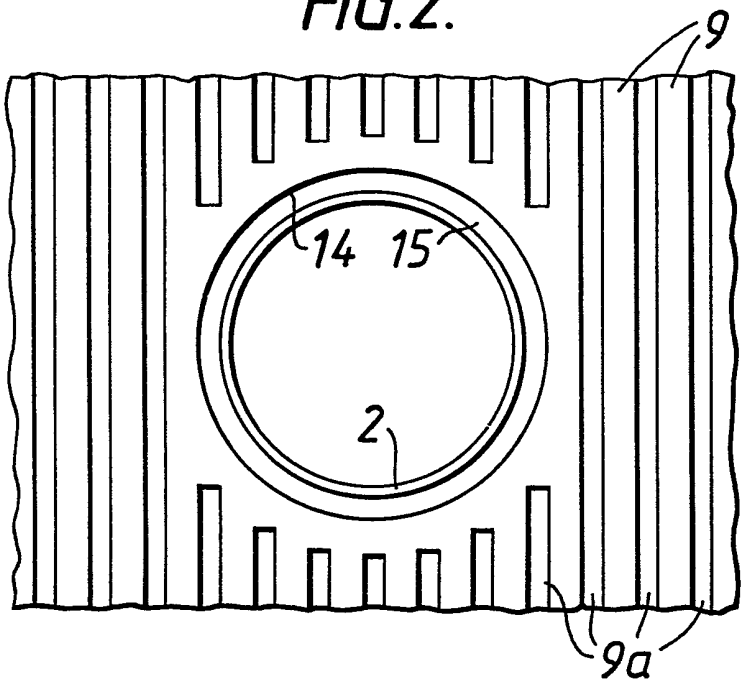

FIG.5.

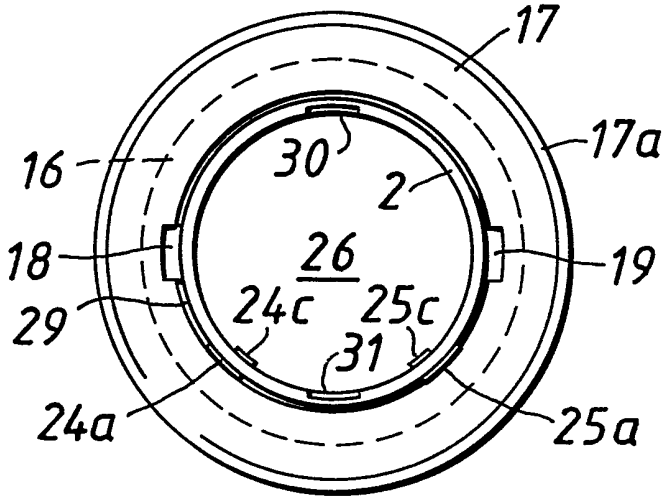

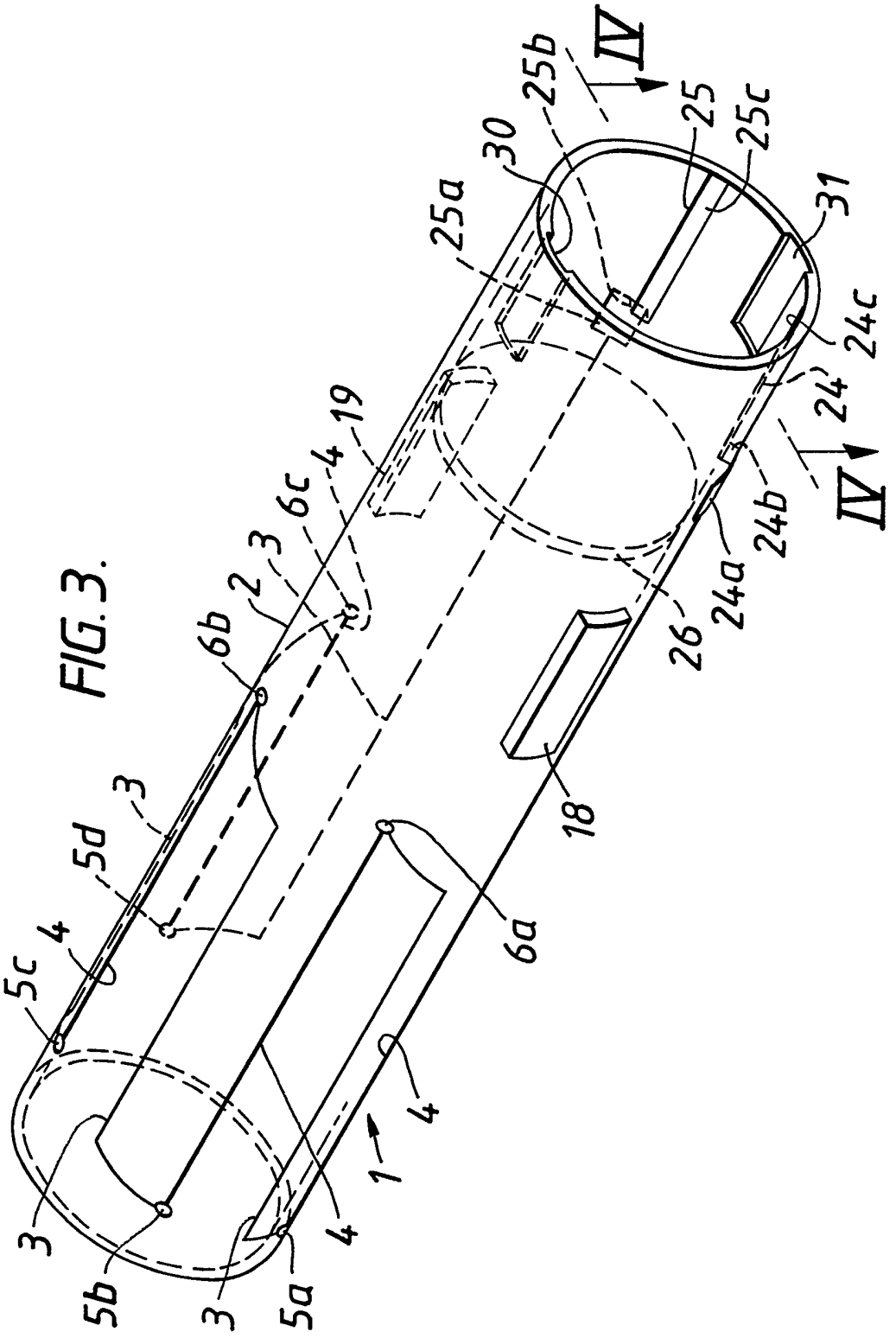
IV
25b
25
25c
30
31
25a
24c
24
IV
19
4
6c
3
2
6b
24b
24a
26
3
5d
18
4
5c
6a
1
4
3
5b
3
5a
4

FIG. 3.

FIG. 4.

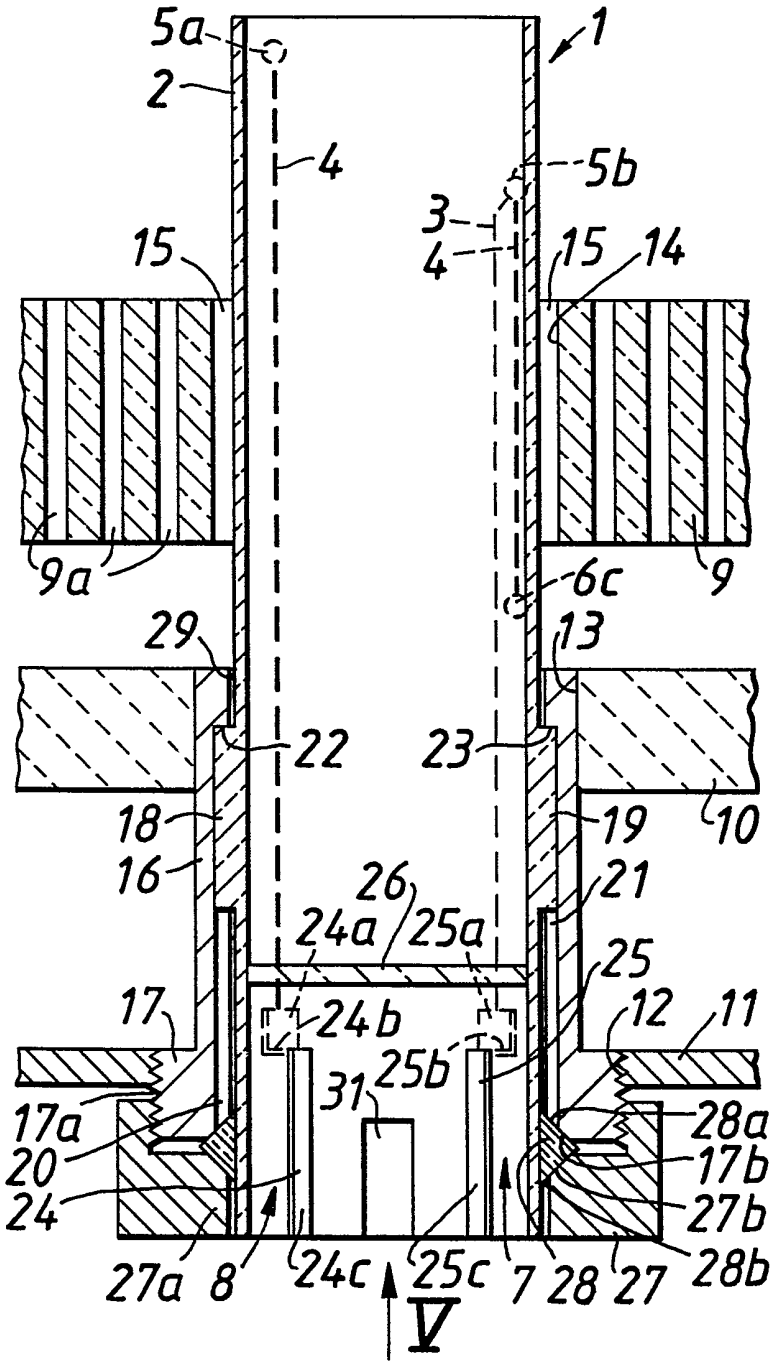
5a
1
2
4
5b
3
4
15
15
14
9a
6c
9
29
13
22
23
18
19
10
16
26
21
24a
25a
25
17
24b
12
11
25b
31
17a
28a
20
17b
24
27b
27a
8
24c
25c
7
28
27
28b
V

FIG. 6.

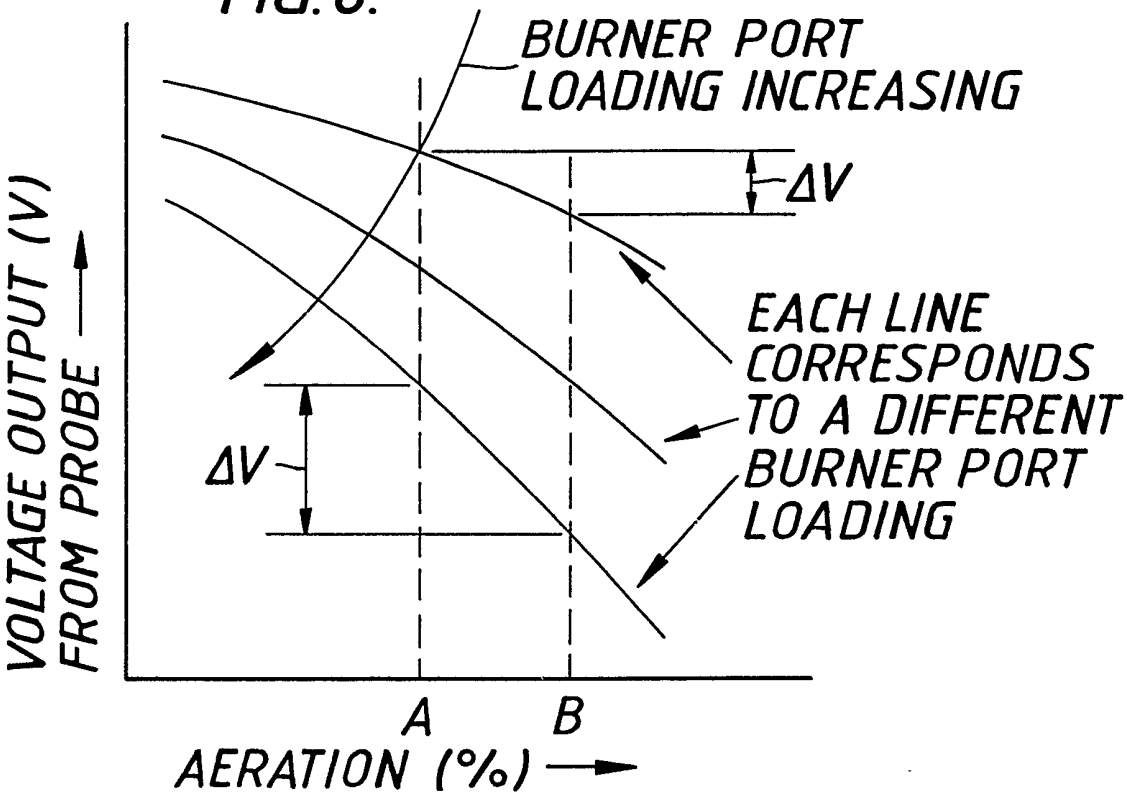
BURNER PORT
LOADING INCREASING
ΔV
EACH LINE
CORRESPONDS
TO A DIFFERENT
BURNER PORT
LOADING
ΔV
VOLTAGE OUTPUT (V)
FROM PROBE
A
B
AERATION (%)

FIG. 7.

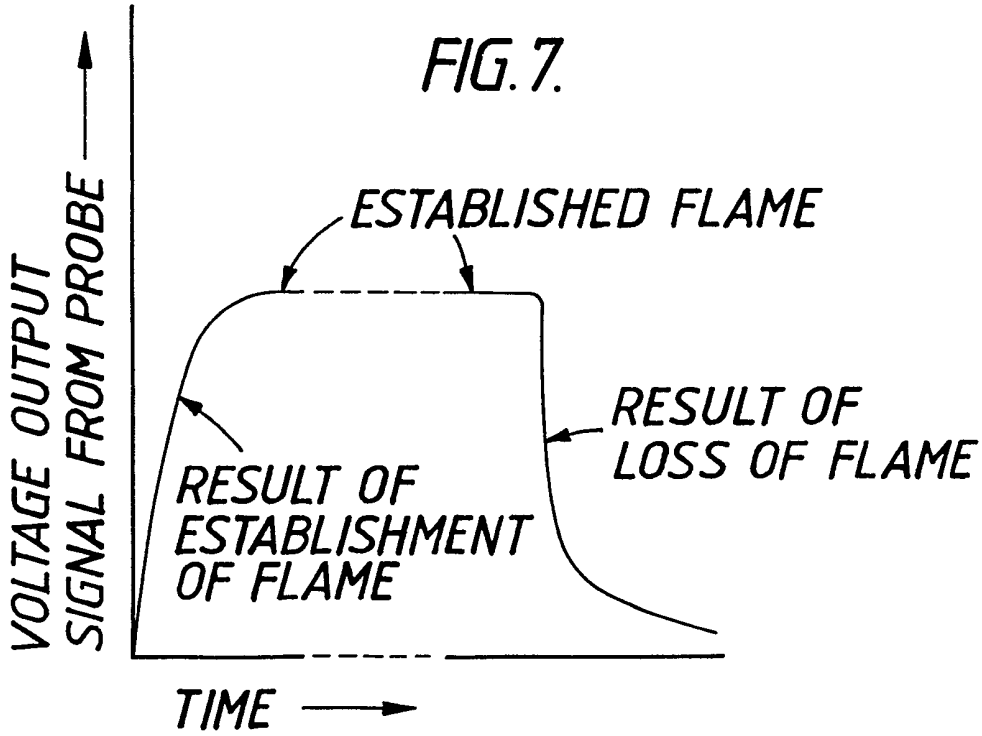
ESTABLISHED FLAME
RESULT OF
LOSS OF FLAME
RESULT OF
ESTABLISHMENT
OF FLAME
VOLTAGE OUTPUT
SIGNAL FROM PROBE
TIME

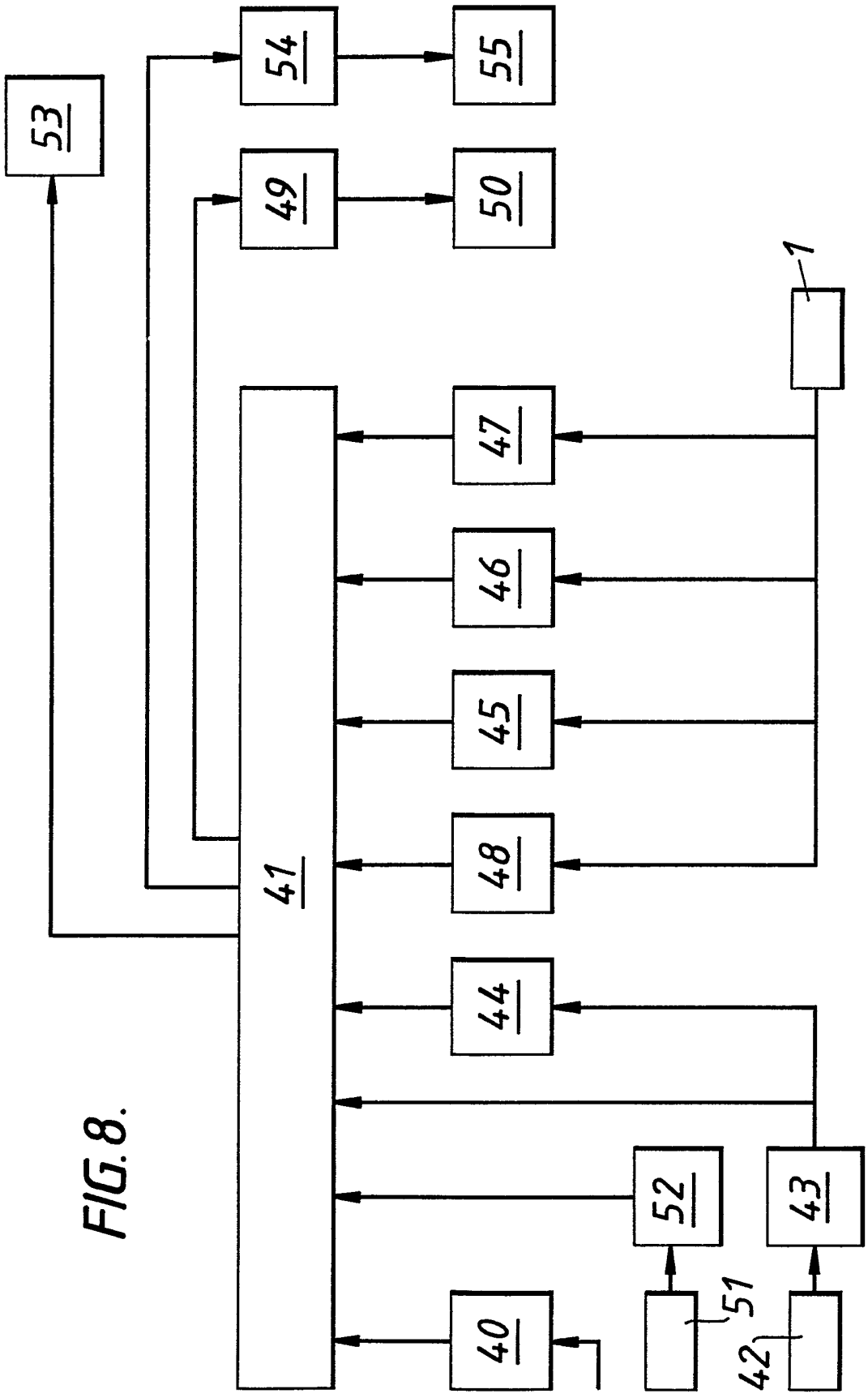

FIG. 8.

FIG. 11.

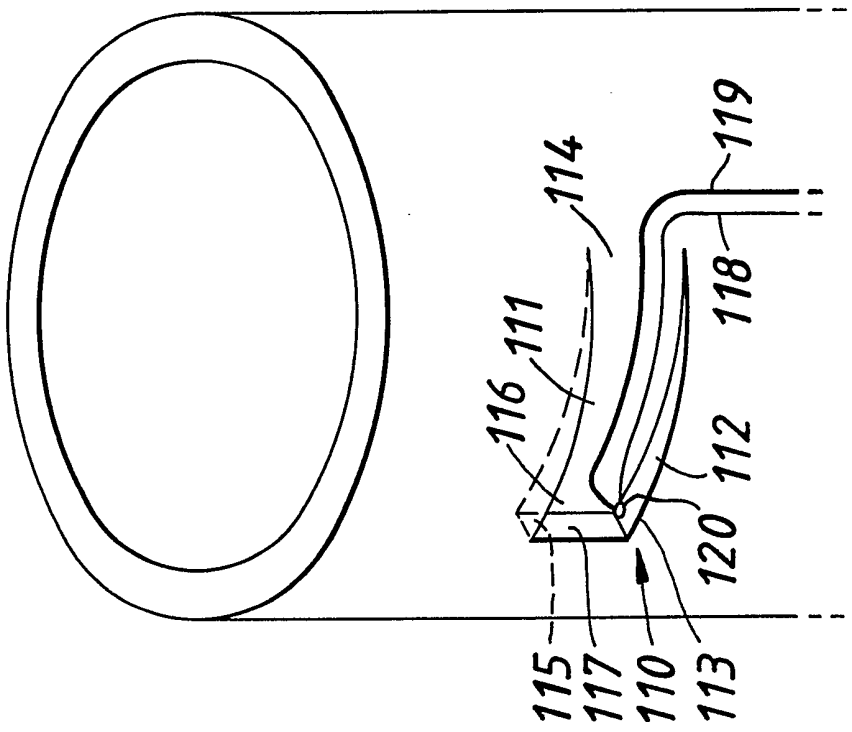

FIG. 9.

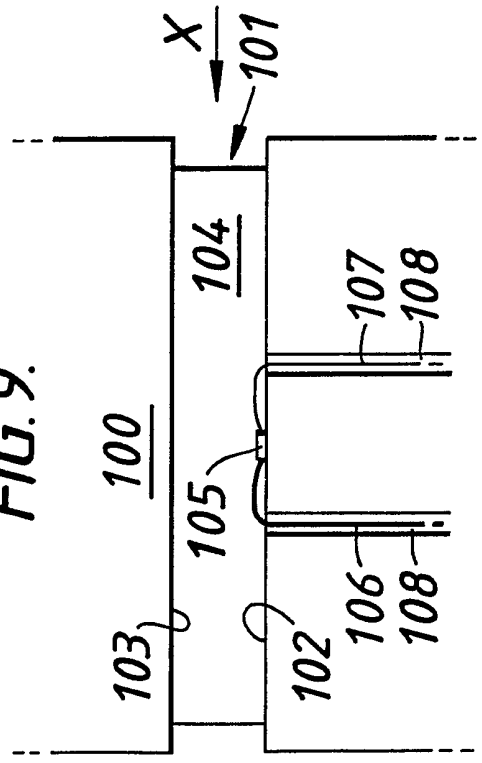

FIG. 10.

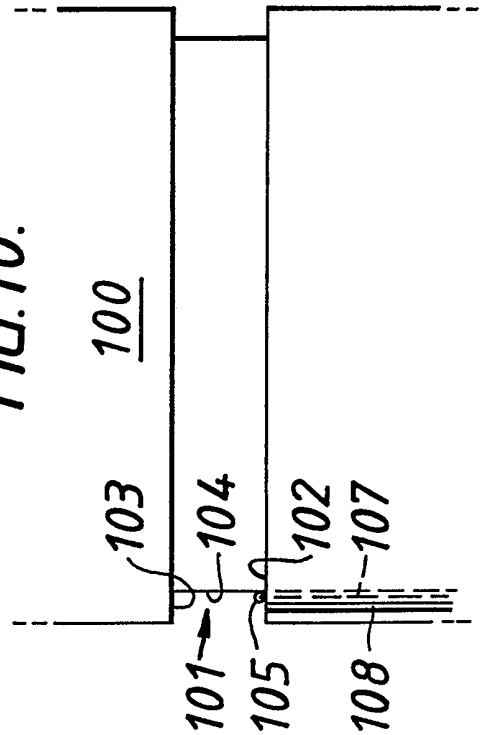

THERMOELECTRIC SENSOR

The present invention relates to burner control and, more particularly, to a thermoelectric sensor and to a burner apparatus incorporating the thermoelectric sensor.

In a fully premixed air/fuel gas burner employing a flame plate or strip having a plurality of burner ports therethrough, for example a ceramic flamestrip, to support the flame, it is possible that the flame may be caused to burn very close to the flamestrip, for example when the flowrate of air in relation to the flowrate of fuel gas has, for whatever reason, decreased to about 10% in excess of that theoretically necessary for complete combustion, corresponding to an air/fuel gas mixture aeration of 110%. This can cause a rapid increase in burner temperature particularly at low port loadings. If this situation were allowed to persist, progressive overheating might occur and result in the flamefront entering the ports of the flamestrip and igniting the air/fuel gas mixture inside the burner. This dangerous condition is termed 'lightback'.

If an air/gas mixture of high aeration, for example 160%, is supplied to the flamestrip, particularly at high port loadings, the velocity of the air/gas mixture through the ports in the strip may become greater than the speed at which the flame can burn at the ports. The flame would then burn away from the flamestrip - a condition referred to as "flame lift". If the speed of the

mixture is sufficiently greater than the flame speed, the flame front will be pushed or blown away from the flamestrip completely and the flame will disappear.

It will therefore be apparent that the position of the flamefront in fully-premixed combustion varies according both to the rate of heat output and to the aeration of the air/gas mixture. In order to achieve a stable flame, means of controlling the rate of air supply (and so, the aeration) should, desirably always, be used, and must be used if the heat output of the burner is to be varied appreciably. Most advantageously aeration control is of the 'closed-loop' kind, comprising a variable-speed fan for supplying air, a modulating fuel gas valve, a means for measuring the air/gas flowrate ratio and a control means to control the rates of air and gas supply, so as to match these appropriately to each other by varying the fan speed and/or the gas valve opening. The adoption of a 'closed-loop' aeration control system allows the operation of an appliance to be largely independent of the combustion characteristics of the gas supplied, and also allows compensation as necessary for variations in fan performance, in supply voltage, and in the flow resistance of the flue and/or heat exchanger.

From one aspect, according to the invention a thermoelectric sensor assembly, for use with a flamestrip in a fuel gas burner, comprises at least one first temperature sensor, the sensor assembly being adapted or adaptable and arranged to be so located

with respect to the flamestrip in the burner for which it is intended that the temperature sensor is positionable substantially immediately upstream of the ports through the flamestrip in relation to the intended direction of flow of air/fuel gas mixture through the strip.

Preferably, the sensor is a thermojunction and the assembly is preferably in the form of a probe having an elongate body part.

In a burner apparatus comprising a sensor assembly defined above the sensor assembly may be connected to control means which detects when the output voltage from the or each temperature sensor exceeds a predetermined value. For example, when the or each temperature sensor is in the form of a thermojunction and lightback occurs through the flamestrip, an increase in the thermojunction output voltage occurs; and in response to this the control means may be operable to close the valve via which fuel gas is supplied to the flamestrip.

When the sensor is in the form of a probe, the probe may be adapted and arranged so that the probe extends through the flame strip, the elongate body part of the probe further comprising at least one further temperature sensor so spaced from the, or the nearest, first temperature sensor that when the probe is located in position with respect to the flamestrip the at least one further temperature sensor is at a predetermined distance downstream of the upstream side of the flamestrip in relation to the intended direction of flow of the air/gas mixture through the

strip.

The at least one further temperature sensor may be at a predetermined distance downstream of the downstream side of the flamestrip, or may be substantially level with the downstream side, or may be upstream of the downstream side so as to be within the flamestrip. The at least one further temperature sensor may also be a thermojunction.

In a burner apparatus comprising this form of sensor assembly control means may be provided to ascertain when the output voltage from the at least one further temperature sensor departs from a predetermined value. For example, if partial lift off of the flame from the flamestrip occurs, so that the flamefront moves downstream away from a suitably positioned thermojunction, a decrease in the sensor output voltage will occur. When sufficient this decrease will cause the control means to adjust the aeration at the flamestrip so as to restore the output of the sensor to, or substantially to, the predetermined value.

In one embodiment the thermoelectric probe may comprise a plurality of thermojunctions electrically connected in series, the intended 'hot' junctions being positioned so that their sensitive parts or areas are spaced apart in a predetermined manner. The probe is located in a predetermined position such that the 'hot' thermojunctions are at predetermined distances downstream of the upstream side or face of the flamestrip, whilst the or each intended 'cold' thermojunction is at a predetermined distance, or

at a common predetermined distance, along the probe such that with the probe in the predetermined position the or each 'cold' thermojunction will be at a predetermined position upstream of the flamestrip and upstream of the nearest 'hot' thermojunction. During operation of the burner including this embodiment of probe the different 'hot' thermojunctions will be exposed to different and variable temperature at their various positions inside and outside of the reaction zone of the flame, whilst the or each 'cold' thermojunction upstream of the flamestrip will, normally, be exposed to a substantially single cooler temperature. All of the 'hot' thermojunctions may be downstream of the downstream side of the flamestrip.

With a given geometry of flamestrip and probe, the output of the probe will depend on the aeration and on the heat output per unit area of flamestrip. When the latter is known (eg. from a gas flowrate measurement) the aeration can be deduced. The thermoelectric probe, as illustrated in more detail below, will provide (via the thermoelectric junctions) an output voltage signal which may be used in the monitoring and control of aeration in 'closed-loop' aeration control systems. The output voltage from the probe may also be used to provide an indication of flame establishment/failure and/or lightback.

From another aspect, the invention comprises a thermoelectric sensor assembly as described above in combination with a flame strip in a fully premixed burner apparatus, the flamestrip having a plurality of ports therethrough via which premixed air and fuel

can pass for combustion in the vicinity of the intended downstream surface of the flamestrip, the flamestrip also having an aperture in which the sensor assembly is located, the flamestrip at least in part defining one or more openings adjacent or immediately adjacent the outer surface of the probe, such that when the flamestrip is in use the or each opening serves as a burner port which supports a flame having a predetermined relationship to that supported by each of the plurality of ports.

By immediately adjacent the Applicants mean that the or each opening is defined between the outer surface of the probe and the flamestrip.

By adjacent the Applicants mean that the or each opening is defined solely by the flamestrip, there being closer to the probe surface no other ports, openings or other like apertures intended to support flame. The or each such adjacent opening may be one of the plurality of ports.

The invention will now be described, by way of example only, with reference to the accompanying drawings, in which :-

Figure 1 shows in schematic form a thermoelectric probe according to the invention and its positioning with respect to a flamestrip in a burner apparatus,

Figure 2 is a plan view of the probe and flamestrip taken in the direction of arrow II in Figure 1 with the thermojunctions and

tracks omitted,

Figure 3 is a perspective view of one embodiment of thermoelectric probe according to the invention,

Figure 4 is a cross-sectional view of the probe, taken on the line IV-IV through the length of the probe shown in Figure 3, clamped in position by a securing ring with respect to a flamestrip and burner apparatus as shown in Figure 1,

Figure 5 is an end view of the probe and surrounding sleeve taken in the direction of arrow V in Figure 4, but with the ring seal and securing ring omitted,

Figure 6 shows in idealised form by way of illustration a graph in which voltage output from the thermoelectric probe is plotted against aeration for different heat outputs per unit area of flamestrip,

Figure 7 shows in idealised form by way of illustration a graph in which voltage output from the probe is plotted against time to portray, successively, the flame at the flamestrip appearing, remaining stable and then disappearing suddenly,

Figure 8 is a schematic illustration of components of a control system for utilising the voltage output signal from a probe according to the invention,

Figure 9 shows in schematic form a portion of another embodiment of probe according to the invention,

Figure 10 is a view of the probe in Figure 9 taken in the direction of arrow X, and

Figure 11 shows in schematic form a portion of a further embodiment of probe according to the invention.

With reference to Figure 1, a thermoelectric probe 1 comprises a probe body 2, for example made in the form of a hollow ceramic rod which may be cylindrical (as shown) or prismatic and on the outside surface of which are printed tracks of platinum 3 and platinum/rhodium 4, alternately, extending lengthwise of the rod.

At predetermined positions the platinum and platinum/rhodium tracks are joined together to form upper thermojunctions 5a,b,c,d (four in this particular example) at different distances from the tip of the probe and lower thermojunctions 6a,b,c (three in this particular example) all at substantially the same distance from the tip of the probe. The platinum track 3 from the thermojunction 5d and the platinum/rhodium track 4 from the thermojunction 5a extend down the probe and are connected with electrical terminal regions 7,8, respectively, via which voltage output signals are passed from the probe as will be described later.

The tracks and thermojunctions are overglazed for the purpose of

providing protection.

The connection of the probe to the burner apparatus and its electrical connection to control means external to the probe will be described later.

The burner apparatus (of which only parts required for an understanding of the present invention are shown and described here) is of the fully premixed air/fuel gas burner kind and comprises a ceramic flamestrip 9 having a plurality of burner ports 9a, such as slots, extending therethrough and a perforated or porous flametrap 10 spaced below the upstream face of the flamestrip. Below the flametrap is a wall 11 of a plenum chamber adapted for the supply of air/fuel gas mixture to the flamestrip.

The probe 1 extends through substantially coaxially aligned apertures 12,13,14 in the plenum chamber, flametrap and flamestrip, respectively. The probe is adapted and arranged to so extend through the aperture 14 in the flamestrip that the upper thermojunctions 5a,b,c,d are at different predetermined distances above the flamestrip 9 and the lower thermojunctions 6a,b,c are at substantially the same predetermined distance below the flamestrip.

The geometry and dimensions of the aperture 14 in the flamestrip and of the probe body 2 are jointly such that the gap 15 between the surface of the flamestrip bounding the aperture and the exterior of the probe is of similar size to the actual normal

ports 9a extending through the flamestrip as is also shown in Figure 2. Thus the nature of the flames and flamefronts in the vicinity of the thermojunctions 5a,b,c,d is substantially the same as, or a close approximation of, the nature of those associated with the normal ports. Consequently, the flamestrip can be viewed as defining with the probe a dedicated port or aperture 15 for the probe.

An annular sleeve 16 made for example of ceramic material and having a completely cylindrical (as shown) or prismatic inner surface extends from the wall 11 of the plenum chamber only to the discharge side i.e. the upper side, as shown, of the flametrap and is in sealed contact with both the flametrap and plenum chamber.

The lower end of the sleeve 16 is provided with an annular outwardly extending flange 17 having an external screw thread 17a (as shown in Figure 4) via which the sleeve is screwed into the wall 11 in a manner such as to provide a seal between the sleeve and the wall to prevent leakage of the air/gas mixture or products of combustion from the appliance.

The outside surface of the probe body 2 is provided with two fixed, parallel formations or lugs 18,19 which extend outwardly and longitudinally of the probe surface and are substantially diametrically located with respect to each other. The formations engage in respective channels, keyways or grooves, 20,21 in the sleeve 16. The channels 20,21 are open at their lower ends to permit insertion of the formations into the channels as the probe

is slid through the hollow interior of the sleeve 16 into the burner apparatus. The channels terminate short of the upper end of the sleeve 16 so that the upper ends of formations 18,19 engage or abut against end surfaces 22,23 provided by the sleeve at the upper ends of the channels 20,21.

By locating the formations 18,19 in the channels 20,21 and furthermore against the end surfaces 22,23 of the sleeve it is ensured that the probe is positioned correctly in a rotational sense, should this be necessary or desired, and also at the correct depth of insertion in the burner apparatus so that the thermojunctions 5a,b,c,d and 6a,b,c, are at their predetermined positions with respect to the flamestrip.

The engagement of the formations 18,19 with the channels 20,21 also determines the lateral positioning, in a plane parallel with, for example, the flamestrip 9, of the probe within the sleeve 16. This positioning is such that the gap 15 which encircles the probe is substantially as desired throughout the depth of the flamestrip.

One form which the probe may take in practice is shown in Figures 3,4 and 5. With reference to those figures parts similar to those described with reference to Figure 1 have been designated the same reference numbers and will not be described again, to avoid repetition, unless further explanation or clarification is felt necessary.

In Figures 3, 4 and 5, the probe body 2 is in the form of a straight, thin-walled hollow ceramic rod having a low thermal capacity. At each of the terminal regions 7 and 8 metal strips 24,25 are electrically connected to the lower ends of the tracks 3 and 4, respectively, to provide electrical terminals to enable the probe to be connected to control means as will be described later. Each metal strip 24,25 comprises a portion 24a,25a overlying and connected, for example by a metal/metal bond, to the respective lower end of the tracks 3,4 on the outside of the probe, an intermediate portion 24b,25b which extends in a sealed manner through a respective aperture (not shown) in the wall of the probe body 2, and a portion 24c,25c which extends down the inside of the wall of the hollow probe body towards the bottom end of the probe as viewed in Figure 4.

Above the terminal portions 24a,25a the probe is provided with an internal blanking-off plug 26 which, when the probe is in use, prevents communication, via the interior of the probe body, between the interior of the appliance and the external atmosphere. As shown in Figure 4, the plug 26 may be so located in the probe as to be in the region between the plenum wall 11 and the flametrap 10 when the probe is mounted in position.

The probe is secured in position on the appliance with respect to the flamestrip by means of an internally screw threaded securing ring 27 having an annular internal flange 27a. The ring 27 screws onto the externally threaded flange 17 of the sleeve 16. A ring seal 18 of triangular cross-section (as seen in Figure 4)

encircles the probe body 2 and is compressed between the flange 17 of the sleeve 16 and the flange 27a of the securing ring 27 to provide a seal which closes off the annular gap 29 between the probe body 2 and the sleeve 16 at the lower end of the sleeve. The surface of the flange 17 of the sleeve 16 and the surface of the flange 27a of the securing ring 27 incorporate conical seatings 17b and 27b which engage and match respectively with the surfaces 28a,28b of the ring seal 28, as can be seen in Figure 4. If necessary or when desired, the probe can, after unscrewing the securing ring 27, be withdrawn from the burner apparatus through the sleeve and be replaced readily without dismantling the burner.

It will be appreciated that an electrical plug (not shown) carrying terminal conducting portions for engaging the terminal conducting portions 24c,25c on the probe may be inserted into the lower end of the probe to connect the probe with external electrical equipment. The bottom end of the probe may be provided with one or, as shown, two recesses 30,31 in the internal surface of the probe body 2 to receive a lug or lugs (not shown and as appropriate) on the external surface of the electrical plug to facilitate correct positioning of the plug with respect to the terminal conducting portions 24c,25c on the probe.

The positioning and configuration of the thermojunctions 5a,b,c,d are predetermined having regard to the burner apparatus and flame strip with which the probe is intended to be used. Prior experiments and investigations will have been conducted to correlate, for any given configuration of the thermojunctions

5a,b,c,d, the magnitude of the voltage output signal from the probe with the port loadings (ie. heat output rates) and the aerations used to produce the results. Such data can be presented in the form of a graph as shown in Figure 6.

To illustrate the basis of Figure 6, let it be assumed that the burner is operating at some particular rate of heat output and at the correct aeration with the flame in a substantially stable state, the flamefront being at, say, position 'X' in Figure 1. The thermojunctions 5a,b,c are downstream of the flamefront and relatively hot compared with the thermojunction 5d, whilst all of the thermojunctions 6a,b,c are relatively cold compared with the thermojunctions 5a,b,c,d. (All of the downstream junctions 5a,b,c,d are designated 'hot' junctions and the upstream junctions 6a,b,c are designated the 'cold' junctions). With the flamefront at position 'X' the output voltage from the probe would be of a particular magnitude dependent upon the aeration of the air/fuel gas mixture supplied to the burner. This can be shown as a point on a probe performance diagram such as Figure 6, note being also taken of the aeration and of the burner port loading corresponding to the rate of heat output assumed.

If, in response to a change in the external demand for heat, the rate of burner heat output is altered, the position of the flamefront relative to the probe will generally alter. For example, if the burner is caused to operate at a higher rate of heat output, while the aeration is maintained unchanged, the flamefront may move to the position 'Y' in Figure 1. In this case

only the thermojunctions 5a,b would be downstream of the flamefront and relatively hot compared with the thermojunctions 5c,d. It will therefore be apparent that with the flamefront at 'Y', the output voltage from the probe would be different from (in practice, lower than) the output voltage delivered with the flamefront at 'X'; and this could be portrayed as another point on a diagram such as Figure 6.

Furthermore, should there occur a change in the aeration of the air/fuel gas mixture, the heat output rate of the burner remaining unchanged, the temperature of the products of combustion will in the general case alter, decreasing (for example) with increasing aeration. As a result, each of the thermojunctions downstream of the flamefront will produce an individual output voltage, and the probe as a whole an aggregate output voltage, different from before. Once again this effect can be depicted in a diagram such as Figure 6.

It will be appreciated that, once produced for a given probe/flamestrip/burner apparatus in combination, Figure 6 can be used in a reverse sense as a 'lookup table' or data bank, to deduce the aeration which is implied by some particular value of probe output voltage at some particular rate of heat output (burner port loading). It will also be appreciated that it is possible to specify, at any particular port loading, acceptable limits of deviation of the aeration from some desired or ideal value, in terms of permissible upper and lower limits of probe output voltage, at that port loading.

Figure 7 shows the probe output voltage plotted against time. This Figure highlights the rapid rate at which the output voltage rises as the flame becomes established in a substantially stable or settled state, and the rapid rate at which the probe output voltage falls when the flame becomes extinguished. The control system may be provided with signal processing means comprising, on one hand, processing means for detecting a rapid positive rate of change in probe output voltage as evidence of flame establishment and, on the other hand, processing means for detecting a rapid negative rate of change in probe output voltage as evidence of flame loss. The rise or fall in probe output depicted in Figure 7 would be substantially completed within a period of a few seconds, typically 5 seconds, by reason of the low thermal capacity of the probe.

If the burner apparatus malfunctions and lightback occurs with the flame burning immediately upstream of the flamestrip 9, the thermojunctions 6a,b,c will become relatively hotter than the thermojunctions 5a,b,c,d since the former will now be the junctions more directly exposed to the heat of the flame. Consequently the polarity of the voltage output from the probe will become reversed. The control system may include signal processing means to detect such a reversal of output voltage polarity as evidence of flame lightback.

Reference will now be made to Figure 8, purely in order to illustrate the different functions of the thermoelectric probe, and to show broadly how they may be utilised to control the

operation of burner apparatus, for example in a boiler for providing central heating and/or a sanitary hot water service.

When the external system demands any particular rate of heat output from the boiler, this is signalled from an external load-indicating heat output demand source (not shown) to an interfacing signal processing means 40. This latter then provides (for example, in accordance with an internally-stored 'lookup table') an output signal representative of the gas flowrate necessary to supply the rate of heat output demanded. This signal is delivered to a first input of a comprehensive central signal processing means 41.

The actual gas flowrate existing is measured by a gas flowrate detecting means 42 and reported to an interfacing signal processing means 43. The output signal from the means 43, representative of the actual gas flowrate existing, is delivered both to a second input of the comprehensive means 41 and to a signal processing means 44, the function of which will be described subsequently.

The voltage output from the probe 1 is delivered in parallel to signal processing means 45,46,47,48. The means 45,46 are, as mentioned above in relation to Figure 7, respectively, the means for detecting:

(i) a rapid positive rate of change in probe output voltage, indicative of flame establishment, and

(ii) a rapid negative rate of change in probe output voltage, indicative of flame loss.

The means 47 is a means for detecting the polarity and magnitude of the probe output voltage, a positive value of at least a predetermined magnitude being, in the absence of an output from the flame loss detector means 46, indicative of the continued presence of a flame on the flamestrip 9 of the burner apparatus; and a negative value being indicative of flame lightback.

Each of the means 45,46,47 delivers an output signal to a respective input of the comprehensive signal processing means 41, to inform the means 41 of the detection of flame establishment, flame loss, standing flame presence or flame lightback, as the case may be.

The signal processing means 48 is associated with regulation of the aeration of the air/fuel gas mixture, as will be described subsequently.

The action taken by the means 41 upon initial receipt of a signal from the means 40 depends upon whether or not the signal from the means 43 differs from some predetermined value signifying, on the basis of the signal from the means 42, that the burner apparatus has not yet been put into operation.

If the signal from the means 43 implies that the burner apparatus is not operating, the processing means 41 will output a signal to

an air flowrate control means 49 regulating the rotational speed of a variable-speed combustion air fan 50, so that the fan 50 will commence rotation. The air flowrate delivered by the fan 50 is measured by an air flowrate detecting means 51 and reported via an interfacing signal processing means 52 to the means 41. The means 41 will, if necessary, subsequently output further signals to the means 49 until the speed of the fan 50 has become sufficient to deliver an air flowrate substantially equal to a predetermined value. When this air flowrate has persisted for a predetermined period of time (registered, for example, by a timer means internal to the means 41 and referred to as the 'pre-purge time') the means 41 will output a signal to bring into action an ignition means 53. After a further predetermined period of time (again registered, for example, by a timer means internal to the means 41, this timer means not necessarily being separate from that for registration of time during the purging operation), the means 41 will output a signal to a gas flowrate control means 54 regulating the degree of opening of a modulating gas valve 55, such that there results a gas flowrate substantially equal to a predetermined gas flowrate and conducive, with the abovementioned airflow, to satisfactory operation of the burner apparatus.

If the means 41 then receives from the means 45 a signal indicative of flame establishment, this signal being received within a predetermined period of time referred to as the 'ignition safety time' (and registered, for example, by a timer means internal to the means 41), the means 41 will output a signal to deactivate the ignition means 53. If, however, the means 41

receives no signal from the means 45 within the 'ignition safety time', the means 41 will output both a signal to the gas flowrate control means 54 so as to cause complete closure of the gas valve 55, and a signal to deactivate the ignition means 53. Furthermore, after a predetermined period of time which may be substantially equal to the 'purge time', and which may be registered for example, by a timer means internal to the means 41, the means 41 will output a signal to the air flowrate control means 49 so as to cause the fan 50 to be deactivated and brought to rest. In addition, the means 41 will initiate within itself a condition termed 'lockout', whereby further operation of the central signal processing means 41 is debarred until a user removes 'lockout', for example by temporarily interrupting the electrical supply to the control system.

If, following a successful establishment of flame at the flame strip 9, an accidental loss of flame should suddenly occur for some reason, the signal processing means 46 will output a signal to the means 41. This latter will, in turn, output a signal to the gas flowrate control means 54 to cause complete closure of the gas valve 55, and if necessary a signal to the air flowrate control means 49 to cause the speed of the fan 50 to be reduced until the air flowrate becomes substantially equal to the predetermined value appropriate to safe starting of the burner apparatus, as described previously. This being achieved (as evidenced by the signal from the means 52) the comprehensive processing means 41 will initiate a startup sequence, as described above. Should a flame either fail to result, or once again be

lost after being established, the means 41 will initiate a 'lockout' condition within itself.

Again, if, following a successful establishment of flame at the flamestrip, the flame should at some moment light back into the burner, this will be detected by the voltage polarity responsive means 47 as described earlier, and a signal will be output to the means 41. The latter will then output a signal to the gas flowrate control means 54 to cause complete closure of the valve 55. After a period of time which may be substantially equal to the 'purge time' employed during startup of the burner apparatus and which is registered, for example, by a timer means internal to the means 41, the means 41 will output a signal to the air flowrate control means 49 to cause the fan 50 to be deactivated. In addition, the means 41 will initiate a 'lockout' condition within itself.

Given that a flame is established successfully and that thereafter it continues to exist in a normal manner at the flamestrip, if any difference between the signals supplied to the comprehensive signal processing means 41 from the means 40,43 were to exceed a predetermined magnitude, the means 41 will output separate signals to the air flowrate control means 49 regulating the rotational speed of the variable-speed combustion air fan 50 and to the gas flowrate controlling means 54 regulating the degree of opening of the modulating gas valve 55. In response to the signals from the means 41, the outputs from the flow control means 49,54 may be arranged to alter so as ultimately to return the difference in

the signals from 40 and 43 to within the permitted range of inequality. This is performed in a manner such that the flowrates of air and fuel gas alter at predetermined relative rates, the ratio between these flowrates (and so, the aeration) being intended to remain at all times within a band having predetermined upper and lower limits, as mentioned above. Furthermore, should it prove advantageous, the band of permissible aeration values may be made dependent upon the rate of gas flow. For example, at high gas flowrates, aeration values in a band covering relatively lower values of magnitude may be prescribed, for instance to increase the thermal efficiency of an associated heating appliance or to lessen the size and cost of the combustion air fan. Conversely, at low gas flowrates, aeration values in a band covering relatively higher values of magnitude may be prescribed, for example to provide an increased margin of safety against flame lightback.

Again, for reasons of safety, the control means 49,54 may be arranged such that when the rate of heat output is to be increased, the air flowrate is increased slightly in advance of the gas flowrate; and conversely when the heat output is to be reduced, the air flowrate is decreased slightly later than the gas flowrate. In this case, during the process of heat output alteration, the aeration value would tend towards the upper end of the band of permissible values.

Should the signal from the means 40 indicate that the demand for heat output from the external system has ceased, the means 41 will

output a signal to the gas flowrate control means 54 to cause complete closure of the valve 55; and after a predetermined time registered, for example, by a timer means internal to the means 41, the means 41 will output a signal to the air flowrate control means 49 to cause the fan 50 to be deactivated.

The means 40 may be arranged to cause a continuous demand for heat output from the external system to be signalled to the means 41 as an intermittent or cyclic requirement for the burner apparatus to be brought into operation. This feature of the means 40 would be especially advantageous should the demand for heat output be less than the lowest heat output available from the burner apparatus in continuous operation.

The arrangement so far described in relation to Figure 8 provides aeration control of the 'open-loop' kind. However with that form of control the aeration may tend to depart from the intended range of values, for example, when there is a variation from the normal performance of the fan or when there is a change in the flow resistance of the flue. In such cases the use of Applicant's probe is particularly advantageous, as in effect it transforms the aeration control method from the 'open-loop' kind to the 'closed-loop' kind, as mentioned earlier and as will now be described.

The interfacing signal processing means 48 outputs to the means 41 a signal representative of the actual output voltage of the probe 1. A further input signal to the means 41 is provided by the signal processing means 44. This second signal is

representative of the permissible upper and lower limits of the probe output voltage, as established by the means 44 (for example, from an internally-stored 'lookup table' or data bank) in dependence upon a signal from the means 43, this signal being representative of the actual gas flowrate existing. Should the actual probe output voltage lie outside the permissible limits, the means 41 would output a correcting signal, in the first instance to the air flowrate control means 49 only. This latter would then cause the variable-speed fan 50 to increase or to decrease, as appropriate, the flowrate of the combustion air, so as to return the ratio of the air flowrate to the gas flowrate (i.e. the aeration) to the range intended. However, should such alteration of the air flowrate prove unable, because of adverse circumstances, fully to provide the required correction to the aeration, the means 41 would then output a correcting signal to the gas flowrate control means 54, the sense of this signal being converse to that supplied by the means 41 to the air flowrate control means 49. Consequently the modulating gas valve 55 would decrease or increase, as appropriate, the flowrate of fuel gas sufficiently to allow the aeration to return to a value within the intended range.

It will be appreciated, therefore, that the probe 1 can be employed for the monitoring and control of aeration in 'closed-loop' aeration control systems.

In the interests of simplicity the foregoing description has omitted reference to certain routine details relating to safety

which would need to be taken into account in practice. The description relating to Figure 8 is intended solely to illustrate the control features made possible by use of Applicant's probe.

When operating conditions are transient, the output of the probe will differ from the output which would be observed in steady-state operation at the same burner port loading and aeration. For instance, when the rate of heat output is increasing, the output voltage from the probe will be higher than would be expected from Figure 6. Such difference (or 'lag') will be greatest when the rate of heat output is changing rapidly. Discrepancies of this type can be minimised by minimising the thermal capacity of the probe and maximising (subject to considerations of shielding from radiant heat, as will be described later) the exposure of the 'hot' thermojunctions to the combustion products. The construction of the Applicant's probe seeks to facilitate the achievement of these objectives within constraining considerations such as the strength and reliability of the probe. However since, in practice, the output of a real probe will show some degree of response lag, it is necessary to control the rate of change of burner heat output so that the probe output voltage will not stray, purely due to lag, beyond the band limits specified in the 'lookup table'.

It will be evident from the above description of the probe illustrated schematically in Figure 1 and from the description of the control system in Figure 8 that Applicant's probe may be used in a multifunctional manner. Thus, the output voltage signal from

the probe can be utilised to monitor simultaneously the aeration of the air/fuel gas mixture, the establishment/failure of the flame, and the absence/existence of light-back. It will be appreciated that the voltage signal from the probe can be processed, and responded to, by microelectronic means or otherwise.

In an ideal arrangement the thermojunctions would sense heat from the combustion products only by convection. However, in practice the thermojunctions can also sense radiant heat emanating from various surfaces in their vicinity, for example, from the downstream side (i.e. upper side as viewed in the drawings) of the flamestrip or from refractory combustion chamber linings. If a significant amount of radiant heat reaches a thermojunction in relation to the combined total of convective heat and radiant heat, the burner aeration will not in general be adequately monitored. An indication of the effect of radiant heat may be deduced from Figure 6 in that the slope of the characteristic lines therein decreases with decreasing port loading. This occurs partly because the flamestrip temperature increases as the port loading decreases at fixed aeration. A low slope of the characteristic line for a given port loading implies that the voltage output of the probe will be relatively insensitive to changes in the aeration.

Thus, as can be seen from Figure 6, the range ΔV over which the voltage output varies between two different values of aeration, for example A and B, is greater at the higher port loadings than

at the lower port loadings. Viewed another way, the sensitivity of the probe increases with an increase in port loading for a given aeration.

In order to reduce or minimise the exposure of the 'hot' thermojunctions 5a,b,c,d to radiant heat the probe may be so constructed that a respective physical barrier is present directly between each thermojunction and the source of the radiant heat. For example, the thermojunctions 5a,b,c,d may be located within grooves or recesses provided in the outer surface of the probe. Alternatively, the probe may have successive portions of decreasing radius arranged step-wise in the direction away from the flamestrip, to form annular shoulders or surfaces on which the thermojunctions 5a,b,c,d may be located.

By way of schematic illustration, the grooved or recessed embodiments of probe may be in the forms shown in Figures 9 and 10, and 11.

In Figures 9 and 10, the outside or periphery of the probe 100 is provided with axially spaced annular grooves, only one of which 101 is shown for simplicity. Each groove has a lower surface portion 102, an upper surface portion 103 and an inner surface portion 104. Each groove accommodates on its lower surface portion 102 a thermojunction 105 and the thermojunctions 105 in successive grooves are situated in positions which may be peripherally displaced or offset from each other. The tracks 106 and 107 may extend from the thermojunction 105 to the periphery

of the probe 100 at its junction with the lower surface portion 102 of the groove 101 and then down the outside of the probe to the 'cold' thermojunctions electrically preceding and succeeding the thermojunction 105. In the process the tracks 106 and 107 negotiate the surface portions 103, 104, 102 of any lower grooves 101 (not shown). Alternatively, and as shown, the tracks 106 and 107 are located within and extend down channels 108 extending longitudinally of the probe between the annular grooves 101. Advantageously, the depth of the channels 108 is substantially the same as the depth of the grooves 101. The channel arrangement provides for better physical protection of the tracks and relative ease of manufacture.

In another form of probe as shown in Figure 11, axially spaced recesses may be offset from each other around the periphery of the probe. Each recess, only one of which is shown in Figure 11, may be of part-spiral form 110 wherein the depth of the recess in a radial direction with respect to the probe axis (that is the distance from the inner surface portion 111 to the outer edge 113 of the lower surface portion 112) increases in a circumferential direction from a region 114 where the inner portion 111, lower surface portion 112 and upper surface portion 115 of the recess all merge with the peripheral surface of the probe, to a region 116 of maximum depth where the recess terminates at an end surface 117 which extends between the upper and lower surface portions 115,112 and to the inner surface portion 111. In this case the inner surface portion 111 provides the base for a smooth lead in/out of the tracks 118 and 199 to or from the thermojunction

120.

Most advantageously the surface portions 103 and 104 of the grooves 101 and also the surface portions 111 and 115 and the end surface 117 of the recesses 110 may be provided with a low-emissivity coating to further reduce the amount of radiant heat reaching the thermojunctions 105 or 120.

The thermojunctions and the tracks are overglazed for protection.

As before, for a given probe, flamestrip and burner apparatus prior experiments and investigations would be conducted to correlate the magnitude of the voltage output signal from the probe with the port loadings and the aerations used to produce the results.

Another embodiment of thermoelectric sensor (not shown) comprises a thermoelectric arrangement in which one or more 'hot' thermojunctions is/are at a similar predetermined distance upstream of the flamestrip as the thermojunctions 6a,b,c. 'Cold' thermojunctions in the present embodiment would be located upstream of the 'hot' junctions, for example in the region adjacent the upstream side of the flametrap 10. Under normal firing conditions the thermoelectric sensor produces an output signal of a magnitude less than the magnitude of a predetermined reference signal with which comparator means (not shown) would compare the output signal. However, when lightback occurs at the upstream side of the flamestrip 9, such lightback is detected or

sensed as a result of it causing the output signal from the sensor to exceed the reference signal. In response to this detection, control means (not shown) may be arranged to effect 'lockout' of the burner apparatus as described previously. It will be appreciated that in this embodiment no provision is made for the monitoring of aeration or of flame establishment/failure.

A further embodiment of thermoelectric sensor (also not shown) may comprise a modification of, and an addition to, the probe shown in Figure 1. Thus, the thermojunction arrangement may be similar to that shown except that the 'cold' junctions 6a,b,c would not be employed to detect lightback and would be located further upstream under substantially single temperature conditions, for example in the region adjacent the upstream side of the flame trap. Lightback would be detected by a completely separate thermojunction arrangement embodied into the probe construction in a similar fashion to the platinum and platinum/rhodium tracks 3,4 and 'hot' and 'cold' junctions 5a,b,c,d and 6a,b,c in Figure 1 respectively. This separate thermojunction arrangement incorporated into the probe would comprise one or more 'hot' junction(s) at a predetermined distance upstream of the flamestrip, for example at the position occupied by the 'cold' thermojunctions 6a,b,c as viewed in Figure 1, whilst the 'cold' thermojunction(s) of the separate thermojunction arrangement would be located upstream of the 'hot' thermojunctions, for example in the region adjacent the upstream side of the flametrap. The output voltage signal from the separate lightback detection arrangement would be sensed independently via separate terminals

at the base of the probe. It will therefore be appreciated that in this embodiment one thermojunction arrangement produces a signal for use in the monitoring and control of the burner aeration and optionally also for monitoring flame establishment/failure, whilst another completely separate thermojunction arrangement produces a signal for monitoring the occurence, or not, of lightback.

The Applicants believe that the above described probe overcomes various disadvantages associated with known platinum resistance temperature sensor arrangements. When there is a partial but not complete break of a connection in the platinum resistance sensor arrangement an erroneous output may occur as a result of an increase in resistance accompanying the partial break. Were it not for the breakage an increase in sensor resistance would signify an increase in temperature, which, were such a probe used to monitor the aeration in a combustion control system, would imply a reduction in aeration. Consequently the control system would, wrongly, cause the rate of air supply to be increased, possibly to the point of inducing a complete loss of flame due to lift, as described earlier.

With the Applicants probe described above the overglaze protects the thermocouple tracks and junctions to a certain extent and should a partial breakage occur in, say, one of the tracks, the output signal is not affected since the generation of output voltage from the probe is not reliant upon a flow of current through the thermojunctions or tracks. A substantially complete

breakage would be required to affect the output, and such a loss of path continuity may be detected readily by signal processing means. The possibility of rupture of the tracks 3,4 is minimised by ensuring that the thermal expansion of the probe body approximates to that of the thermoelectric materials forming the tracks and the junctions 5a,b,c,d and 6a,b,c.

Various other kinds of aeration sensors, for example solid-state oxygen sensors, can fail at least in accuracy, for example as a result of contamination which causes the output to depart from the value normally expected under the prevailing conditions.

Applicants investigations have shown that, advantageously, combustion resonance noise and NOx emission from fully premixed air/fuel gas burners can be kept at low levels when the aeration of the flame supported by the flame plate or strip is maintained at a high level, for example greater than 140%, but however not at such a high level, for example 160%, as to cause flame lift. The use of the above described probe facilitates close control of the aeration to the required level.

CLAIMS

1. A thermoelectric sensor assembly for use with a flamestrip in a fuel gas burner, the assembly comprising at least one first temperature sensor for sensing temperature upstream of the ports through the flamestrip (in relation to the intended direction of flow of fuel gas through the strip); at least one further temperature sensor so spaced from the, or the nearest, first temperature sensor that when the assembly is located in position with respect to the flamestrip with which it is intended to be used, the or each further temperature sensor is at a, or a respective, predetermined distance downstream of the upstream side of the flamestrip; and conducting means via which voltage output signals emanating from the sensors can be sensed.

2. A thermoelectric sensor assembly as claimed in claim 1, in which the assembly is in the form of a probe having a body part which incorporates a plurality of the first sensors and a plurality of the further sensors.

3. A thermoelectric sensor assembly, as claimed in claim 1 or claim 2, in which the or each first sensor and the or each further sensor is in the form of a respective discrete thermojunction.

4. A thermoelectric sensor assembly, as claimed in claim 3, in which the first and further sensors are connected together alternately so as to be electrically connected in series.

5. A thermoelectric sensor assembly, as claimed in any of the preceding claims, in combination with a flamestrip in a fully premixed burner apparatus, the flamestrip having a plurality of ports therethrough via which premixed air and fuel can pass for combustion in the vicinity of the intended downstream surface of the flamestrip, the flamestrip also having an aperture in which the sensor assembly is located, the flamestrip at least in part defining one or more openings adjacent or immediately adjacent the outer surface of the probe, such that when the flamestrip is in use the or each opening serves as a burner port which supports a flame having a predetermined relationship to that supported by each of the plurality of ports.

6. A thermoelectric sensor assembly and burner apparatus combination as claimed in claim 5, in which, in use, the voltage output of the sensor assembly is used as an indicator of the aeration in a flame supported by the flamestrip and/or of flame establishment near the flamestrip and/or of flame loss from the flamestrip and/or flame lightback through the flamestrip.

Patents Act 1977
Examiner's report to the Comptroller under Section 17 (The Search Report)

Application number 9108439.2

Relevant Technical fields

(i) UK Cl (Edition K) G4N (NHBS)

(ii) Int Cl (Edition 5) F23D; F23N

Search Examiner

D L SUMMERHAYES

Databases (see over)

(i) UK Patent Office

(ii) WPI

Date of Search

9 JULY 1991

Documents considered relevant following a search in respect of claims ALL

Category (see over)	Identity of document and relevant passages	Relevant to claim(s)
X	GB 2196459 A (RINNAI)	1 at least
X	GB 1442745 (RADIATION)	1 at least
X	WO 86/05860 A1 (MINTEN)	1 at least

SF2(p)

MS5AAY

Category	Identity of document and relevant passages	Relevant to claim(s)

Categories of documents

X: Document indicating lack of novelty or of inventive step.

Y: Document indicating lack of inventive step if combined with one or more other documents of the same category.

A: Document indicating technological background and/or state of the art.

P: Document published on or after the declared priority date but before the filing date of the present application.

E: Patent document published on or after, but with priority date earlier than, the filing date of the present application.

&: Member of the same patent family, corresponding document.

Databases: The UK Patent Office database comprises classified collections of GB, EP, WO and US patent specifications as outlined periodically in the Official Journal (Patents). The on-line databases considered for search are also listed periodically in the Official Journal (Patents).

Published 1992 at The Patent Office, Concept House, Cardiff Road, Newport, Gwent NP9 1RH. Further copies may be obtained from Sales Branch, Unit 6, Nine Mile Point, Cwmfelinfach, Cross Keys, Newport, NP1 7HZ. Printed by Multiplex techniques ltd, St Mary Cray, Kent.