(12) UK Patent Application (19) GB (11) 2 148 024 A

(43) Application published 22 May 1985

(21) Application No 8327093

(22) Date of filing 11 Oct 1983

(51) INT CL⁴
G01N 21/25

(52) Domestic classification
G2J 15A

(56) Documents cited
None

(58) Field of search
G2J

(71) Applicants
Vladimir Mikhailovich Zolotarev,
Ulitsa Bely Kuna 25 Kv 252, Leningrad, Union of Soviet Socialist Republics.
Valery Viktorovich Melnikov,
Ulitsa Baikonurskaya 7, Korpus I Kv 368, Leningrad, Union of Soviet Socialist Republics.
Gadir Mamed Ogly Mansurov,
Poselok Stroitelei, Ulitsa Efandieva 5/8 Kv 8, Sumgait, Union of Soviet Socialist Republics.
Semen Mordkovich Sutovsky,
30 Kvartal 6/4 Kv 12, Sumgait, Union of Soviet Socialist Republics.
Evgeny Ivanovich Lebedev,
Ulitsa Karbysheva 6, korpus 1 kv 28, Leningrad, Union of Soviet Socialist Republics.
Alexandr Ivanovich Somsikov,
Ulitsa Ushinskogo II Kv 65, Leningrad, Union of Soviet Socialist Republics.
Vladimir Alexandrovich Nikitin,
Ulitsa Korablestroitelei 23, Korpus 2 Kv 164, Leningrad, Union of Soviet Socialist Republics.
Asker Alekper Ogly Abdullaev,
30 Kvartal 2a/15 Kv 24, Sumgait, Union of Soviet Socialist Republics

(72) Inventors
Vladimir Mikhailovich Zolotarev
Valery Viktorovich Melnikov
Gadir Mamed Ogly Mansurov
Semen Mordkovich Sutovsky
Evgeny Ivanovich Lebedev
Alexandr Ivanovich Somsikov
Vladimir Alexandrovich Nikitin
Asker Alekper Ogly Abdullaev

(74) Continued overleaf

(54) Optical element for attenuated total reflection, a method of spectroscopic analysis and a mould for making this element

(57) An optical element 22 for attenuated total reflection is made of thermoplastic chalcogenide glass. The method of spectroscopic analysis of solid samples includes establishing optical contact between the solid sample 23 under investigation and the optical element 22 by heating the surface of the optical element in the area of its contact with the sample to a temperature above the softening point of the material of this element, either before or upon its contact with the sample, and then cooling the optical element to a temperature below this softening point. The mould for making the optical element has guideways 13 movably supporting the end walls 14 of the mould, co-operating with clamping means 18 supported by these guideways 13.

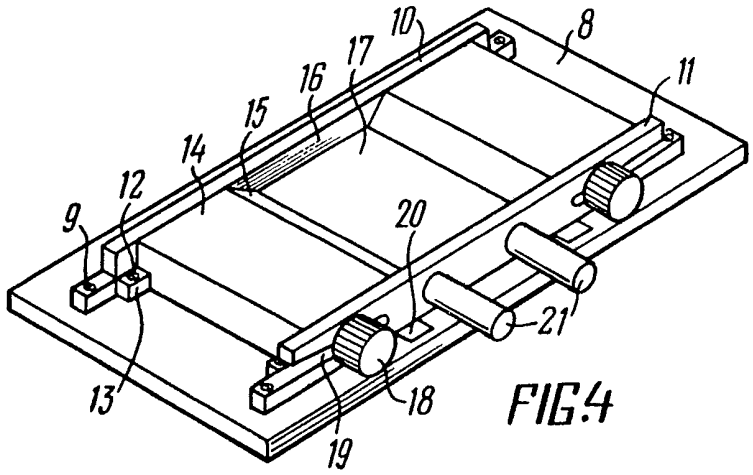

FIG.4

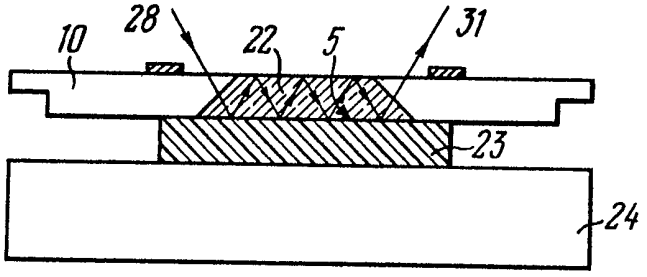

FIG.6

GB 2 148 024 A

This print takes account of replacement documents submitted after the date of filing to enable the application to comply with the formal requirements of the Patents Rules 1982.

(74) Agent and/or Address for Service
A A Thornton & Co,
Northumberland House, 303–306 High Holborn,
London WC1V 7LE

2148024

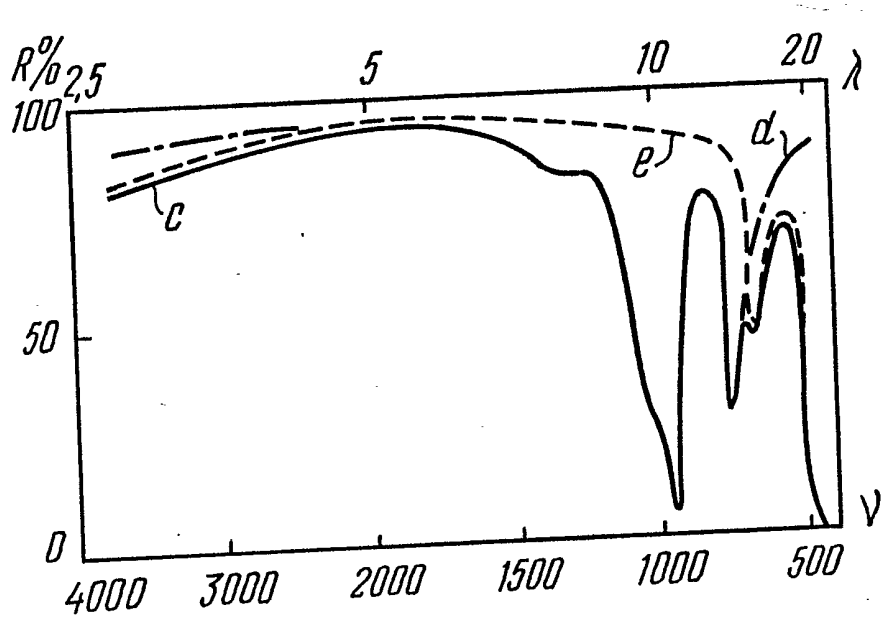

FIG.1a

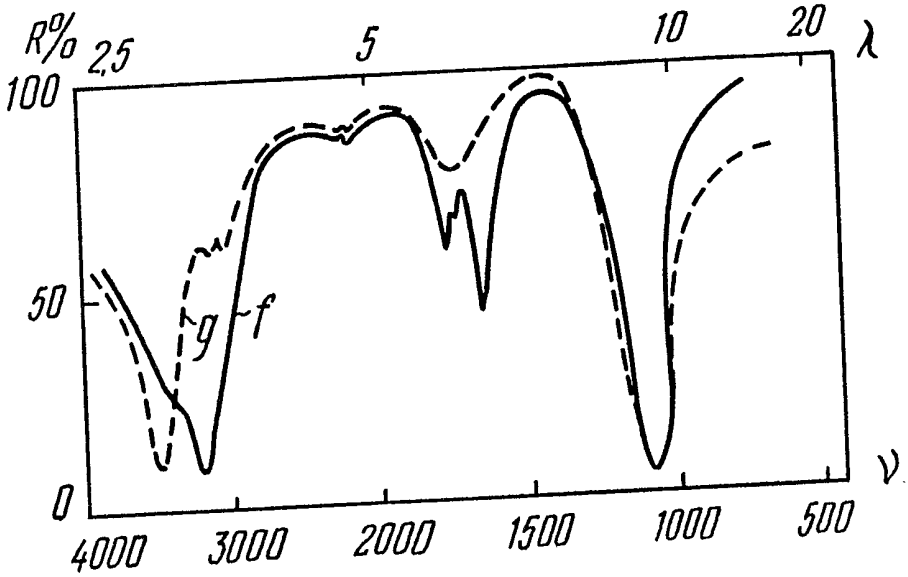

FIG.1b

2148924

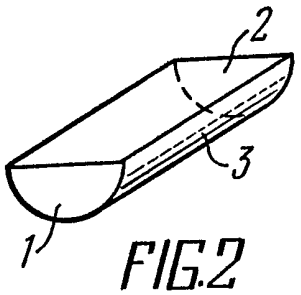

FIG.2

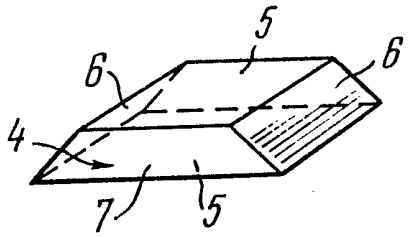

FIG.3

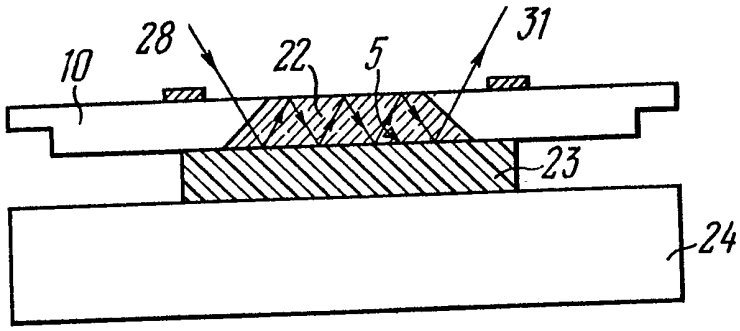

FIG.6

FIG.7

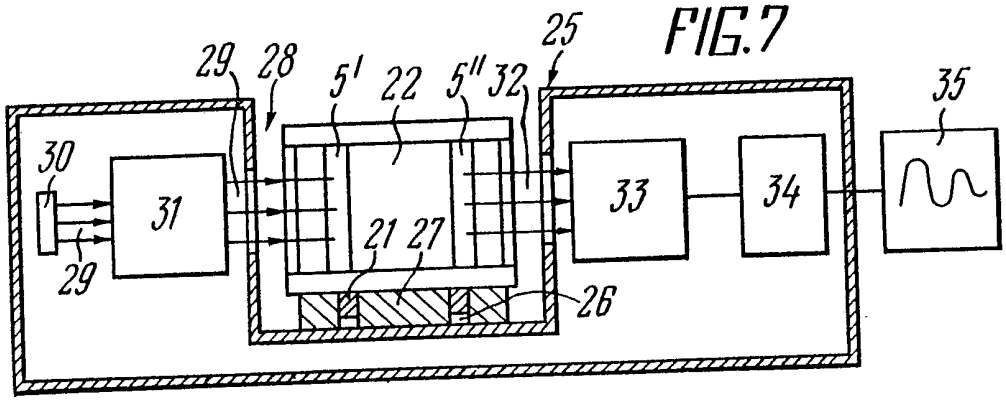

2148024

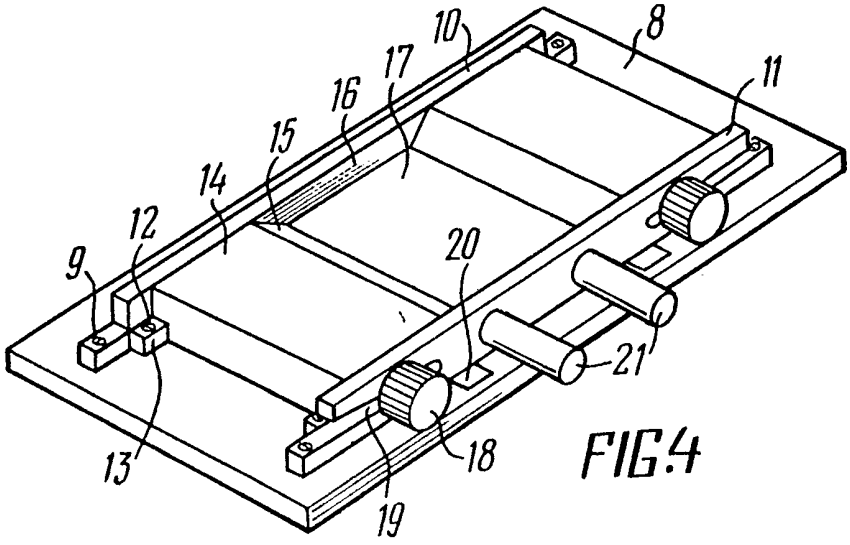

FIG.4

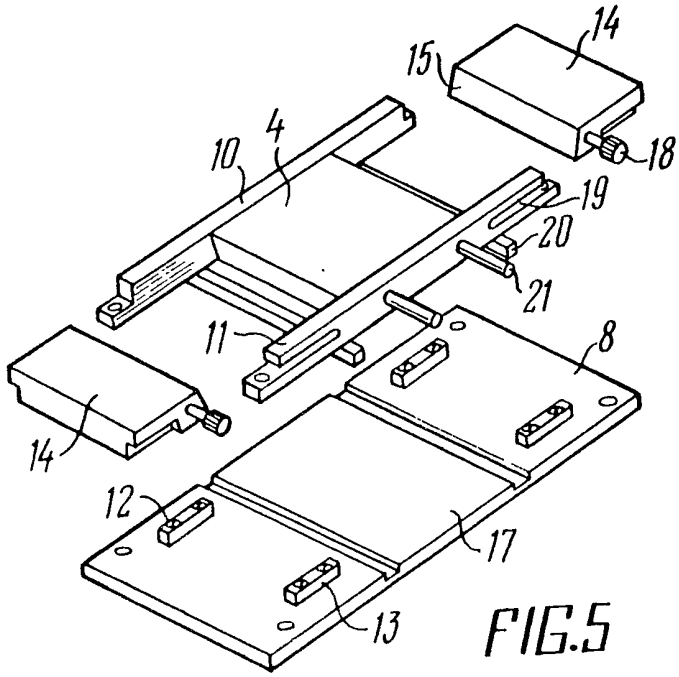

FIG.5

2148324

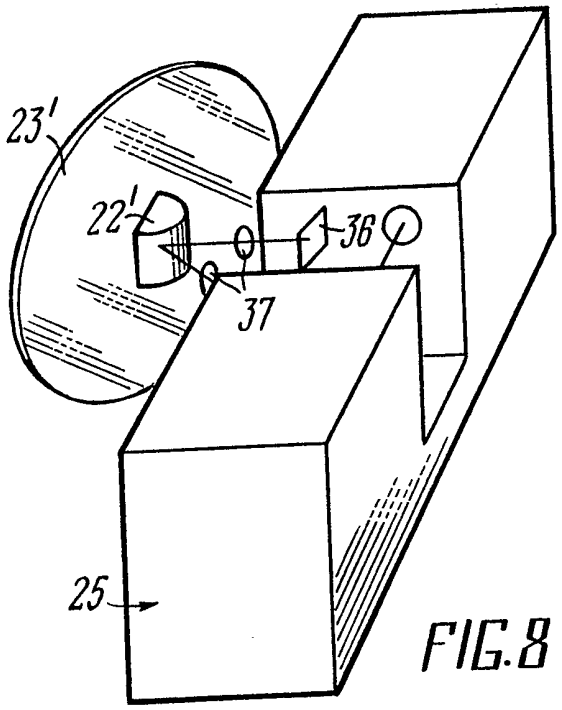

FIG.8

2148024

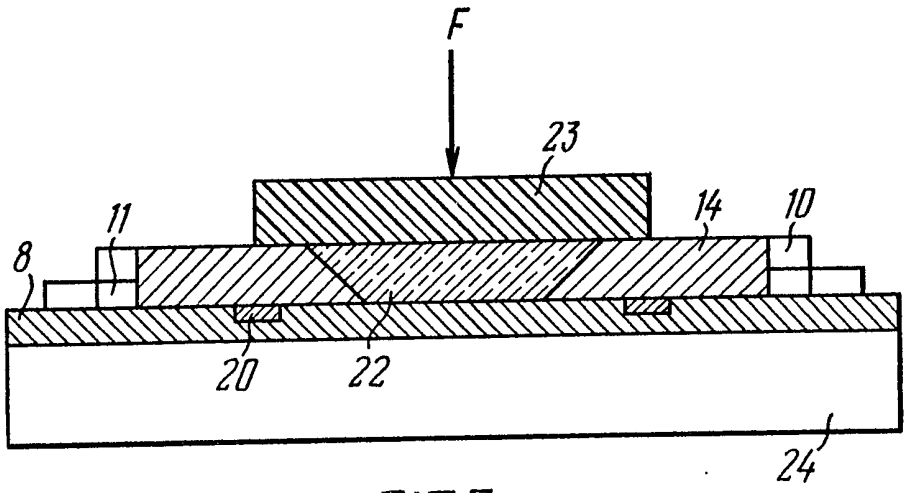

FIG.9

SPECIFICATION

Optical element for attenuated total reflection, a method of spectroscopic analysis and a mould for making the element

The invention relates to spectrosctopy, and more particularly it relates to optical elements for attenuated total reflection, to a method of spectroscopic analysis using these elements, and to a mould for making such elements.

The invention can be utilized for obtaining spectra of attenuated total reflection of solid samples in the infrared region of spectrum (with wavelengths from 1 micron to 18 microns). The disclosed method is suitable for producing spectra of crystals, of glass, of rigid polymeric fibers, of films, as well as of large engineering parts, of coatings on machinery, on bulky household articles (e.g. on refrigerators, on furniture) and on stationary objects (e.g. on walls). Furthermore, the invention provides for obtaining spectra of biological objects in their natural state, e.g. of the horny substance of nails or of the enamel of teeth.

It is an object of the present invention to create an optical element for attenuated total reflection and a method of spectroscopic analysis employing this element, which should provide for establishing optical contact between the surface of a sample under investigation and the surface of the solid optical element, without resorting to mechanical working of these surfaces.

It is also an object of the present invention to obtain contrast and repeatable spectra of solid samples.

It is still another object of the present invention to provide a mould for making the disclosed optical element, operable for making optical elements of any required shape, and at the same time capable of establishing optical contact between the surface of the element and the sample under investigation.

It is a further object of the present invention to broaden the field of applications of the method of spectroscopic analysis, including its suitability for studying solid samples.

These and other objects are attained in an optical element for attenuated total reflection having chalcogenide glass as its basic material, which element, in accordance with the present invention, is made of thermoplastic chalcogenide glass.

It is expedient that the thermoplastic chalcogenide glass have the following composition, percent by weight, arsenic 7 to 27, antimony 1 to 6, iodine 14 to 29, selenium 47 to 62, tellurium 1 to 6.

These objects are also attained in a method of spectroscopic analysis of solid or bulk samples by the attenuated total reflection technique, using the herein disclosed optical element, including forming optical contact between the solid sample under investigation and the optical element for attenuated total reflection, acting upon the solid sample by a radiation flux made to pass through the optical element for attenuated total reflection at an angle of incidence in excess of total internal reflectivity angle and registering the spectrum of attenuated total reflection, which method, in accordance with the present invention, in order to establish optical contact between the solid sample and the optical element, includes heating the surface of the optical element in the area of its contact with the sample, either before or upon the engagement of the element with the sample, to a temperature above the softening point of the element, and cooling the optical element to a temperature below the softening point upon optical contact having been established.

It is expedient that the shaping of the optical element be coincident in time with establishing optical contact between the sample and the optical element, by filling with termoplastic chalcogenide glass the cavity of a mould of a shape corresponding to the shape of the optical element required, heating the mould with the glass therein to a temperature above the softening point of the glass, establishing optical contact between the sample and the surface of the heat-softened glass, then cooling the mould with the glass therein to a temperature below the softening point of the glass, and separating from the optical element those components of the mould which have been in contact with the light entrance and light exit surfaces of the element.

These objects are also attained in a mould for producing the disclosed optical element for attenuated total reflection, comprising a base supporting side and end walls defining the cavity for shaping the optical element, in which mould, in accordance with the present invention, the end walls are mounted for displacement along guideways mounted on the base, and are associated with clamping means operable to define the length of the optical element for attenuated total reflection, the side walls being interconnected by braces and being associated with positioning elements.

Other objectes and advantages of the present invention will become apparent from the following description of its embodiments, with reference being made to the accompanying drawings, wherein:

Figure 1 (a), (b) illustrates attenuated total reflection spectra of various samples;

Figures 2 and 3 show modifications of an optical ATR element embodying the invention;

Figure 4 is a perspective view of a mould for producing an optical element embodying the invention;

Figure 5 shows the same mould in a knocked-down state;

Figure 6 is a cross-sectional view of an optical element embodying the invention, in contact with a sample under investigation;

Figure 7 shows schematically the general layout of a spectroscopic instrument capable of performing the method of spectroscopic analysis embodying the invention;

Figure 8 shows schematically the general layout of a spectroscopic instrument for studying bulky objects;

Figure 9 illustrates a mould for producing an optical element embodying the invention, wherein the element is in contact with a sample under investigation.

In accordance with the invention, an optical element for attenuated total reflection (an ATR element) is made of thermoplastic chalcogenide glass with the softening point above 10° to 30°C, e.g. of class of the following composition, percent by weight: arsenic 7 to 27, antimony 1 to 6, iodine 14 to 29, selenium 47 to 62, tellurium 1 to 6.

Several actual compositions of thermoplastic chalcogenide glass suitable for use as the standard substance for making an ATR optical element are given in Table below, also quoting its major physical constants. Glass of this composition can be manufactured by any suitable known per se process.

Table

No of composition	Composition (% by weight)					Softening point, °C	Transmission region at 10 mm thickness, μm	Refractive index
	As	Sb	I	Se	Te			
1	10.83	1.35	28.92	55.34	4.26	25–30	1–18	2.4
2	14.96	2.70	28.16	49.93	4.25	100–110	1–18	2.4
3	26.07	5,65	14.72	47.64	5,92	110–135	1–18	2,4
4	9. 21	1,36	28.36	58.22	2.85	15–25	1–18	2.3
5	7.57	1.37	18.49	61.14	1.43	12–17	1–18	2.3

It can be seen from the data in the Table that the disclosed composition of thermoplastic chalcogenide glass satisfies the major requirements put before standard substances for ATR spectroscopy, namely:

–it has sufficiently high refractive index (n = 2.3–2.4);

–by selecting the appropriate composition of glass, its softening point corresponding to viscosity of 10^7–10^{14} poise is variable within a broad range from 12–17°C to 110–135°C;

–the transmission or transparency region covers the range of fundamental frequencies of molecular oscillation, which is of the highest interest as far as spectroscopic studies and production quality control are concerned; moreover, in thin layers (as thin as about 30 microns) this glass transmits radiation with wavelengths to 25μm.

To conduct spectroscopy of solid or bulk samples at room temperatures (20°–25°C), it is practical to use optical ATR elements made of glass, Composition 1: 10.83% arsenic, 1.35% antimony, 28.32% iodine, 55.35% selenium, 4.26% tellurium.

To conduct spectroscopy at elevated temperatures (to 100°–110°C), Compositions 2 and 3 can be recommended. To study thermally unstable substances or materials that would not withstand heating above 45°C, optical ATR elements made of chalcogenide glass, Compositions 4 or 5 can be used.

The low softening point of all the abovelisted compositions of chalcogenide glass used for producing the optical elements provides for establishing optical contact with relatively low heating of the contact area, i.e. for retaining the physical properties of the surface of samples under investigation. As any successive softening of the surface of the optical element in the area of its contact with the sample under investigation results in this surface automatically attaining

the microprofile corresponding to that of the surface of the sample, each optical element is repeatedly usable without any intermediate mechanical working.

The disclosed method further provides for spectroscopy in situ of the surface layers of bulky objects or articles which would not be accommodated in any spectroscopic instrument, e.g. of machines, of household articles such as furniture, of local areas of walls, etc.

The disclosed optical elements are highly suitable for studying various biological objects, such as the horny substance of nails or the enamel of teeth in their natural state.

Fig. 1 a shows spectrograms of attenuated total reflection, i.e. the dependence of reflections R on either wavelength λ, μm, or wave number ν, cm^{-1}, of chips of quartz glass, produced in an infrared spectrophotometer with the use of an optical ATR element made of glass, Composition 1. It can be seen from the spectrogram that insignificant attenuation of the radiation in the spectral range of 4000–2000 cm^{-1} and the absorption band about 750 cm^{-1} (curve "c") can be readily compensated for by inserting in the path of the reference beam of the spectrophotometer a plate of an appropriate thickness, made of the same glass (curve "d"). Curve "e" corresponds to the absorption spectrum of the glass.

Fig. 1 b presents spectra of attenuated total reflection of a chip of gypsum crystal (curve "f") and of a growth face of a copper vitriol crystal (curve "g").

An optical ATR element can be moulded to any required shape determined by the character of a study and the parameters of a spectroscopic instrument used. In its simplest form illustrated in Fig. 2 it is a semi-cylinder 1 of which the planar surface 2 is intended as an area of contact with a sample, while the cylindrical surface 3 is intended for entrance and exit of radiation with an adjustable incidence angle. This element offers single reflection of radiation from the surface 2.

To conduct a spectroscopic analysis by the technique of frustrated multiple internal reflection (FMIR), there can be used an optical element of the type illustrated in Fig. 3. It is shaped as a prism 4 of which either one or both bases 5 are intended for optical contact with a sample or samples, whereas the end faces 6 are intended for entrance and exit of the radiation. The side edges 7 are non-working ones.

To produce an optical ATR or FMIR element, it is suggested to use a mould of the type illustrated in Figs. 4 and 5. The mould has a base 8 with screws 9 securing side walls 10, 11 and screws 12 securing guideways 13. End walls 14 are supported by the guideways 13 for longitudinal adjustment. The respective surfaces 15 of the end walls 14, facing each other, and the respective surfaces 16 of the side walls 10, 11 define with the portion 17 of the base 8 spanning these surfaces a cavity for shaping an optical element. The surfaces 15, 16 and the portion 17 of the base 8 should have profiles complementary to the respective profiles of the optical element to be made. Thus, the embodiment of the mould illustrated in Figs. 4, 5, is intended for making a prismshaped optical element of the type shown in Fig 3. To produce an optical element shaped as a semi-cylinder (Fig. 2), the end walls of the mould should have the correponding concave surfaces.

To provide for fine optical characteristics of an optical element, all the abovementioned surfaces of the parts of a mould should have high surface finish. Hence, it is expedient to make them of glass or other materials highly susceptable to mechanical working and polishing ensuring the appropriate surface finish, for the refraction of radiation at these surfaces not to distort noticeably the shape of a wave front. All the surfaces of the mould, contacting the standard substance, could be coated with a polymer film of thickness not below 0.2–0.5 μm, exhibiting low adhesion to thermoplastic chalcogenide glass. The thickness of the film is selected to reliably ensure its continuity over the entire inner surface of the mould. The film may be applied by either vacuum sputtering or by deposition from a solution.

To secure the end walls 14 in a required position on the guideways 13, clamping means are provided, e.g. in the form of screws 18 which, when screwed into the end walls 14, have their heads abutting against the respective side wall 11. To provide for the passage of the screw 18 into the end walls 14, slots 19 are cut in the side wall 11. The side walls 10, 11 are rigidly interconnected by braces 20 arranged so as not to obstruct the longitudinal adjustment of the end walls 14 and not to overlap the entrance and exit faces of the optical element. Einther one side wall 11 or both side walls 10, 11 are associated with positioning elementsm e.g. studs 21.

The production of an optical element of thermoplastic chalcogenide glass with the use of the disclosed mould is conducted, as follows.

One or several pieces of thermoplastic chalcogenide glass are placed into the cavity of the assembled mould (Fig. 4); the total volume of these pieces should be 3–5% above that of the cavity in the mould. Then the mould with the glass therein is heated to a temperature above the softening point of the thermoplastic chalcogenide glass. Thus, when glass of Composition 1 is used, the heating temperature is preferably selected from a 60°–65°C range. To perform the heating, either commonly known electric heaters can be used, or else a thermostat. When glass Compositions 2 and 3 are used, the heating temperature should be 140°C. Composition 4 requires heating to mere 25°–30°C.

Under the action of the heating, the thermoplastic chalcogenide glass softens, its viscosity

decreases, and the glass uniformly fills up the cavity of the mould, attaining the required shape of the optical ATR element to be made.

Then the heating is terminated, and the mould is left to cool down to room temperature, whereby the optical element is formed. Now the screws 18 can be unscrewed, and the end walls can be withdrawn along the guideways 13 from the optical element and taken off the base 8 (Fig. 5). The separation of the surfaces 15 of the end walls 14 from the respective end faces 6 of the optical element (see Fig. 3) is facilitated by the antiadhesive coating on the surfaces 15. Alternatively, this separation can be facilitated either by prestraining the parts of the mould contacting the working faces of the optical element, or by additional cooling of the mould with the optical element therein to a temperature of about 5°C. The separation of the end walls 14 from the optical element can be also facilitated by selecting their material for their linear expansion to be significantly different from that of the thermoplastic chalcogenide glass of which the optical element is made. This requirement is satisfied, among others, by such polymeric materials as polymethylmethacrylate, polytetrafluorethylene, as well as by some grades of bronze.

Then the screws 9 are unscrewed, and the optical element jointly with the side walls 10, 11 is taken off the base 8 of the mould (Fig. 5). This completes the operation of making the optical element. It will be clear from the description of the method of spectroscopic analysis below that more often than not it is more convenient to use the optical element without separating it from the side walls 10 and 11.

By varying the spacing of the end walls 14, it is possible to vary the length of the optical element, i.e. the number of reflections of the radiation. To produce elements of different configurations, e.g. prisms with different angles, lenses of intricate shapes, etc., the end walls 14 of the mould can be made as sets of replacement parts. Furthermore, instead of glass components of the mould with their polymer coating, parts made of corresponding polymers can be used.

Thus, optical ATR elements of thermoplastic chalcogenide glass are more simple to manufacture than elements made of crystalline standard substances, since they do not require costly mechanical working. Moreover, when optical elements made of thermoplastic chalcogenide glass are used, the problem of obtaining elements of practically any desired shape is solved much easier.

The disclosed optical elements also have serious advantages over liquid elements: they are not toxic, they are chemically inactive in the solid state and even in the softened one, and can be stored for prolonged periods particularly, at low temperatures without unpermisible alteration of their shape, physical and chemical properties.

The method of spectroscopic analysis of solid samples with the use of the disclosed ATR element will be described hereinbelow in connection with a study of relatively small samples at room temperature by the technique of frustrated multiple internal reflection spectroscopy (FMIR multiple ATR spectroscopy).

To conduct the disclosed method of spectroscopic analysis, first, optical, contact between the sample to be investigated and the optical element has to be established. To attain this, as shown in Fig. 6, the optical element 22 is placed for its base 5 to engage the surface of the sample 23 and is urged thereagainst with a slight effort applied either by the operator's hand or by a weight, or else in any other suitable known way, and the heater 24 is operated to heat the sample 23.

Owing to heat transfer from the sample 23 to the surface of the base 5 of the optical element 22, the temperature of this surface rises. The sample 23 is heated until the temperature of the surface of the base 5 exceeds the softening point of the thermoplastic chalcogenide glass. Consequently, the surface layer of the optical element 22 attains plasticity, whereby the glass moistens and fills up the surface irregularities of the sample 23 to be investigated, ensuring optical contact even when the surface of the sample 23 has not been polished in advance.

As the heat conductivity of the thermoplastic chalcogenide glass is low, the short-duration local heating of the surface of the optical element 22 leaves the temperature of the main body of the glass at a temperature below the softening point, which means than no deformation of the optical element 22 takes place. With optical contact established, the sample 23 and the optical element 22 are cooled down to room temperature. Then the optical element 22 and the sample 23 are set jointly in a spectroscopic instrument 25 (Fig. 7, e.g. a spectrophotometer based either on a dispersing monochomator or a Fourier-spectrometer. The provision of the studs 21 on the side wall 11 (Figs. 4, 5) receivable in specifically provided sockets 26 (Fig. 7) in the base 27 of the cell compartment 28 of the spectroscopic instrument 25 allows for accurate and reproducible setting of the optical element 22 in the required position. This eliminates the necessity of adjusting the optical element 22, for the radiation flux 29 generated by a radiation source 30 belonging to the spectroscopic instrument 25 and shaped by the first optical system 31 to have the required incidence angle at the entrance face 5 of the optical element 22.

The actual design of the first optical system 31 is determined by the type of the spectroscopic instrument 25 employed. Thus, when a Fourier-spectrometer is used, the first optical system 31 may include an interferometer in addition to the illuminating device or condenser.

The radiation flux 29 falls upon the optical element 22, to be refracted at its entrance face 5′ and directed at the interface of the element 22 (Fig. 6) with the sample 23. When the incidence angle θ of the radiation flux 29 (Fig. 7) is above the critical angle sin

$$\theta = \frac{n_o}{n},$$

where n_o and n are the refractive indices of the sample and glass, respectively, internal reflection takes place; under these conditions the light wave enters the sample 23 to a depth of an order of magnitude of the wavelength, and if the sample 23 absorbs in the given spectral range, the intensity of the reflected radiation flux would be attenuated, i.e. attenuation of total internal reflection takes place. The value of this attenuation is correlated with the absorption value, which result in the fairly close resemblance between the spectra of attenuated total reflection and transmission spectra.

The reflected radiation flux 32 leaves the optical element 22 via its other end face 5″ and enters the second optical system 33. When the spectroscopic instrument 25 employed as a spectrophotometer of the dispersing type, the second optical system 33 includes, in addition to a focusing system, a monochromator capable of successively selecting from the radiation flux narrow spectral ranges with different wavelengths, i.e. of scanning the spectrum of attenuated total reflection. The second optical system 33 directs the radiation into the receiving and measuring system 34 converting the radiation by its own dectector, e.g. of the pyroelectric type, into electric signals and performing amplification and appropriate processing of these signals. In spectrophotometers of the dispersing type this processing, e.g. baseline correction, is performed in the course of the scanning. In case of a Fourier-spectrometer, the processing of signals generated by the detector involves Fourier transform of these signals. This processing is usually conducted after the recording of the interferogram by a computer included into the receiving and measuring system. The sequence of electric signals corresponding to the spectrum of the sample under investigation is recorded by the recording device 35, e.g. on a magnetic disc or some other information carrier.

Following the registration of the spectrum of attenuated total reflection of the sample 23, the latter is separated from the optical element 22 after the sample 23 and the optical element 22 having been cooled either in a refrigerator or with aid of a thermoelectric cooling device employing the Peltier effect. When qualitative analysis is conducted, a base line is to be additionally recorded, i.e. the registration or recording of the spectrum has to be conducted with the optical element 22 alone, without a sample, being set in the path of the luminous flux. The corrected spectrum in that case will be the outcome of division of the spectra registered with the optical element 22 being alone and with the sample.

A major advantage of the disclosed method of spectroscopic analysis is its ability to ensure optical contact between the sample and the optical element, and that without thorough mechanical working of the contacting surfaces of the sample and of the optical element. This cuts down the cost of preparing to spectroscopic analysis and, which is even more important, opens up the possibility of investigating samples that are poorly susceptible to mechanical working, such as rigid plastics, non-resilient polymer fibres, and the like.

When bulky samples are to be investigated (Fig. 8), it might be difficult to conduct heating up of the contact area after having placed the optical element upon the sample to be investigated. In this case it is expedient, first, to heat up to a required temperature a portion of the surface of the sample 23 in the area to be investigated, and than without affording it time to cool down, to set the optical element onto this surface. Owing to heat transfer from the surface of the sample 23, the surface of the optical element 22 in the contact area becomes plastic which, same as in the previously described case, would ensure optical contact of high quality. As can be seen from Fig. 8, in this case the spectroscopic instrument 25 has to be provided with an additional optical system shown conditionally as a combination of two flat mirrors 36 and two lenses 37 optically coupling the optical element 22′ with the optical systems 31 and 32 (Fig. 7).

In cases where the studied surface of the sample 23′ is vertical (Fig. 8), the volume of glass used in the process of moulding the optical element should preferably be 3–5% smaller than the volume of the cavity in the mould. When performing any abovedescribed version of conducting the disclosed method of spectroscopic analysis, care should be taken when heating the surface of the optical element in the contact area to ensure that the temperature of other zones of the element would not exceed the softening point; otherwise deformation of individual portions of the optical element might occur, which would result in distortion of the wavefront of the radiation flux following its passage through the optical element, i.e. in reduction of the

transmission and certain deterioration of the spectrum quality. Besides, with the cycle of heating and cooling the optical element being conducted twice, the time of preparing to spectroscopic study is increased, which means that the time taken by the analysis, as a whole, is likewise increased.

Therefore, for the majority of samples the preferable version of performing the herein disclosed method includes the following succession of steps. As in the abovedescribed versions, the thermoplastic chalcogenide glass in the mould is first heated up to a temperature above the softening point, i.e. until it becomes plastic and attains the required shape of the optical element 22 (Fig. 9). Then, without letting the glass cool down, the sample 23 to be investigated is placed atop the optical element 22 and pressed with a slight effort F for its surface to firmly engage the respective surface of the optical element 22. This yields adequate optical contact between these surfaces. Then the heating is discontinues, and the mould, the sample 23 and the optical element 22 are cooled down to room temperature. This accomplished, the end walls 14 of the mould are separated and removed, as it has been described above (Fig. 5), and the side walls 10, 11 are separated from the base 8 of the mould jointly with the optical element 22 and the sample 23.

The optical element 22 is set in the cell compartment 28 of the spectroscopic instrument 25 together with the sample 23, where they are fixed in place with aid of the setting studs 21 (Fig. 7); then the radiation flux 29 is directed at the optical element 22, and the spectrum of attenuated total reflection of the investigated sample 23 is registered.

Owing to the operation of establishing optical contact directly following in this version of the method the operation of mouiding the optical element, no repeated heating of the contact area is needed any longer. Moreover, upon the optical element 22 having been separated from the base 8 and end walls 14 of the mould, it is heated no more, which eliminates the hazard of its deformation.

When the spectrum of attenuated total reflection of an sample under investigation is to be registered at an elevated temperature (using Composition 2 or 3) or under low temperature conditions (using Composition 4 or 5), the spectroscopic instrument has to be additionally provided with a corresponding heating or cryogenic device.

When dichroism studies are conducted, and it is essential to additionally register attenuated total reflection spectra of a sample in the second position turned through 90° from the first one. In this case the side walls 6, 7 of the optical element can be made working ones, that is, suitable for transmission of radiation. If the inclination angles of the walls 6, 7 and their spacing are made different, respectively, from the inclination angles of the end walls 5 and the distance therebetween, then one and the same optical element can be used for registering ATR spectra with different numbers of reflections.

CLAIMS

1. An optical element for attenuated total reflection, made of thermoplastic chalcogenide glass.

2. An optical element for attenuated total reflection, made of thermoplastic chalcogenide glass containing, per cent by weight, arsenic 7 to 27, antimony 1 to 6, iodine 14 to 29, selenium 47 to 62, tellurium 1 to 6.

3. A method of spectroscopic analysis of solid samples by the attenuated total reflection technique, including forming an optical element for attenuated total reflection, establishing optical contact between the solid sample under investigation and the optical element by heating the surface of the optical element in the area of its contact with the sample, either before or upon the contact of the optical element with the solid sample, the heating being conducted to a temperature above the softening point of the optical element, and then cooling the optical element to a temperature below its softening point, acting upon the solid sample under investigation by a radiation flux passing through the optical element for attenuated total reflection and incident upon the area of optical contact at an angle in excess of the angle of total reflection of the radiation, and registering the spectrum of attenuated total reflection.

4. A method as claimed in claim 3, wherein the forming of the optical element is coincident in time with the establishing of optical contact between the sample and the optical element, by filling with thermoplastic chalcogenide glass the cavity of a mould, of a shape correspondong to the shape of the optical element, and heating the mould with the glass therein to a temperature above the softening point of the glass, then establishing optical contact between the sample 5 and the surface of the softened glass, whereafter the mould with the glass therein is cooled to a temperature below the softening point of the glass, and the components of the mould contacting the radiation entrance and exit surfaces of the optical element, are separated from the optical element.

5. A mould for making an optical element for attenuated total reflection, comprising a base, side and end walls mounted on the base and defining a cavity for shaping the optical element, guideways mounted on the base and movably supporting the end walls, clamping means for

presetting the length of the optical element to be shaped, accommodated on the guideways, positioning elements and braces interconnecting the side walls.

6. An optical element for attenuating total reflection, substantially as hereintofore described with reference to the appended drawings.

67. A method of spectroscopic analysis, substantially as hereintofore described and claimed in Claims 3 and 4.

8. A mould for making an optical element for attenuating total reflection, substantially as hereintofore described with reference to the appended drawings.

Printed in the United Kingdom for Her Majesty's Stationery Office, Dd 8818935, 1985, 4235.
Published at The Patent Office, 25 Southampton Buildings, London, WC2A 1AY, from which copies may be obtained.