May 27, 1930. R. P. HARSHBERGER 1,760,496

SAFETY RAZOR

Filed Jan. 20, 1922 2 Sheets-Sheet 1

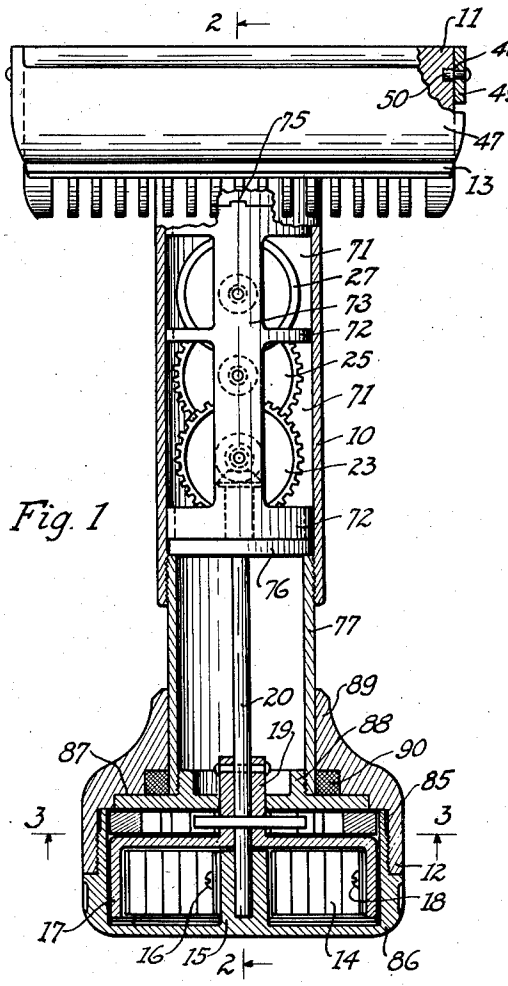

Fig. 1

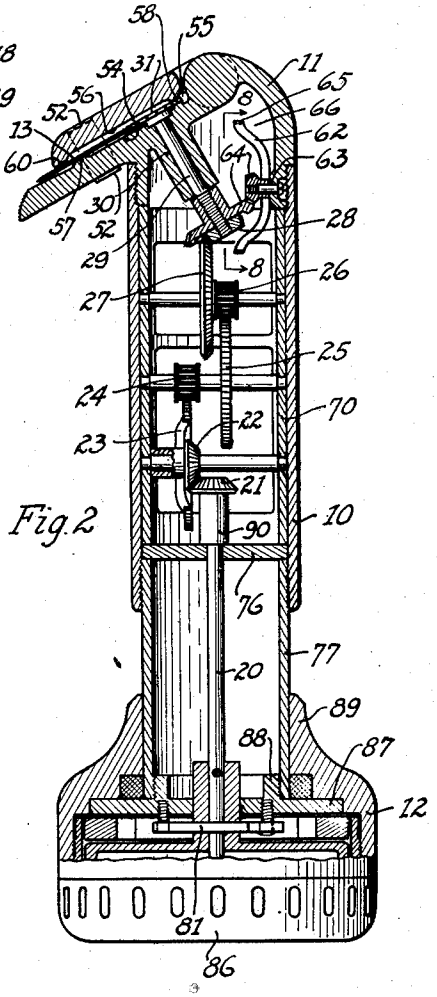

Fig. 2

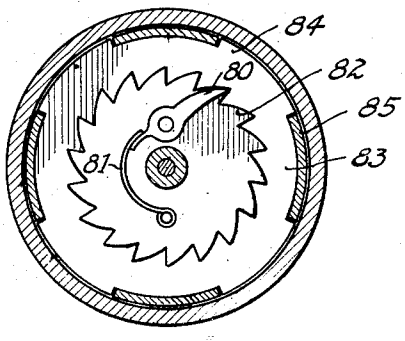

Fig. 3

INVENTOR:
Russell P. Harshberger
By E. J. Andrews
Atty.

May 27, 1930. R. P. HARSHBERGER 1,760,496

SAFETY RAZOR

Filed Jan. 20, 1922 2 Sheets-Sheet 2

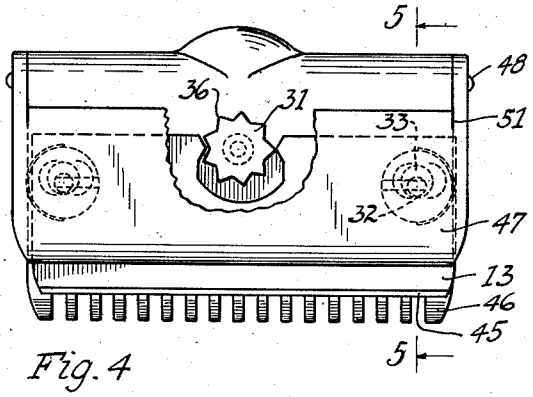

Fig. 4

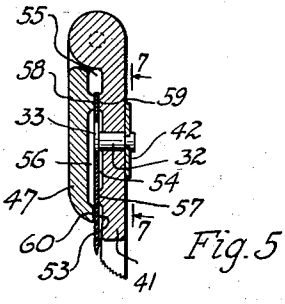

Fig. 5

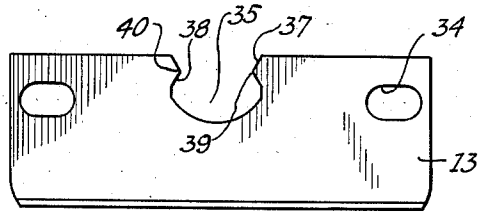

Fig. 6

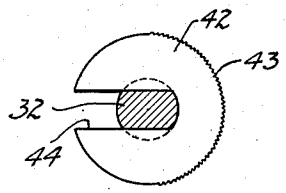

Fig. 7

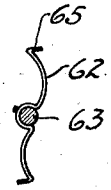

Fig. 8

INVENTOR:
Russell P. Harshberger
By E. J. Andrews
Atty.

Patented May 27, 1930 1,760,496

UNITED STATES PATENT OFFICE

RUSSELL P. HARSHBERGER, OF CHICAGO, ILLINOIS

SAFETY RAZOR

Application filed January 20, 1922. Serial No. 530,526.

This invention relates to improvements in safety razors. One of the objects of the invention is to provide suitable means for vibrating the razor blade and to form the operating mechanism into a unitary structure so that substantially the entire mechanism may be removed from the framework of the razor as a unit, thus materially assisting in assembling or taking apart the interior mechanism of the razor. Another of the objects is to provide improved mechanism for operating the blade; and a further object is to provide a suitably-shaped blade for cooperating with such mechanism. A further object is to reduce materially the friction of the blade in the framework. Other objects of the invention will be apparent from a consideration of the accompanying drawings and the following description thereof:

Of the drawings, Fig. 1 is an elevation partly in section of the razor casing and mechanism therefor, which embody the features of my invention; Fig. 2 is a longitudinal section along the line 2—2 of Fig. 1; Fig. 3 is a transverse section along the line 3—3 of Fig. 1; Fig. 4 is a plan view of the razor cap and the projecting portions of the blade and guard; Fig. 5 is a section along the line 5—5 of Fig. 4; Fig. 6 is a plan view of the razor blade; Fig. 7 is a section along the line 7—7 of Fig. 5; and Fig. 8 is a section along the line 8—8 of Fig. 2.

The mechanism which I have provided in carrying out my invention is adapted to produce a vibratory movement of the razor blade relative to the razor blade guard and the guiding means of the blade; and it comprises a spring motor operatively connected by a suitable gearing and other mechanism with the razor blade. The mechanism also comprises means by which the spring of the motor may be easily put under sufficient tension. And the entire mechanism is enclosed in a casing which is substantially sealed to prevent dirt, moisture, or other undesirable substances from working into the casing and affecting the mechanism.

The razor comprises a tubular casing 10 on one end of which is mounted the head 11 and on the other end is mounted a handle 12. In the head is mounted the blade 13 of the razor which is to be vibrated; and in the handle 12 is mounted a spring motor which is adapted to vibrate the blade, although any suitable driving means may be used to operate the mechanism of the razor. I prefer the following described means:

Mounted within the handle 12 of the razor is a spring motor comprising a coil spring 14, formed from a strap of resilient metal. The inner end of the spring is fixed to a hub 15, which projects inwardly from the end of the handle 12, by any suitable means such as the screw 16; and the outer end of the spring is fixed to a cup member 17 by means of a screw 18, or in any other suitable manner. Fixed to the cup 17 is a hub 19, and fixed to the hub 19 is a driving shaft 20. Mounted on the shaft 20 is a beveled gear 21 meshing with another beveled gear 22. The gear 22 is fixed to a spur-gear 23, which, by means of gears 24, 25, 26, 27, and 28, operates a pin 29 journaled in the bearing 30 of the head. By these means, when the spring is under tension, as hereinafter described, the pin 29 will be rotated, and the rotation of this pin in turn rotates a cam-wheel 31 fixed to the outer end of the pin 29. The rotation of the cam-wheel 31, in the following described manner, will suitably vibrate the blade 13.

The razor blade 13 is slidably mounted in the head 11 of the framework and is guided therein by means of pins 32, the heads 33 of which pass into the elongated recesses or slots 34 in the blade. The cam-wheel 31 is mounted within a cam receiving recess 35 and is provided with a plurality of radially projecting cam points or teeth 36 spaced symmetrically and equidistantly about the perihpery of said cam wheel. On opposite sides of the recess an integral part of the blade extends inwardly of the recess to provide similar cam surfaces 37, 38 to be engaged by the cam points 36 on the cam wheel. Hence, as the cam wheel rotates, the cam points 36 come alternately into contact with the cam surfaces 37, 38 of the blade and cause the blade to oscillate or vibrate rapidly. In the preferred form the cam surfaces 37, 38

extend inwardly at an angle forming high points or projections 39, 40 which, in relative position to the blade proper, are on a line extending substantially parallel with the front edge of the blade so that the direction of the force, which is imparted to the blade by any cam point, parallels the line of movement of the blade. Although I have shown the cam-wheel 31 somewhat star-shaped, and the cam surfaces 37 and 38 of the blade corresponding thereto, yet it is to be understood that the particular shape of the wheel and the cam surfaces of the blade may be varied materially without departing from the spirit of my invention.

By rotating the cam-wheel 31 the blade 13 will be vibrated, and the length of the vibrations will depend upon the particular size and shape of the cam surfaces. With the surfaces as indicated in the drawings, and the number of teeth 36 being odd, it is evident that as one tooth of the cam-wheel begins to act on the surface 38, assuming the rotation of the cam-wheel to be clockwise, the opposite tooth of the wheel will be passing the projection 39; and, with the axis of the cam-wheel substantially in line with the projections 39 and 40, the maximum amount of vibration will be obtained. It will be evident, however, that the movements of the blade are greatly increased with respect to the rotative speed of the cam wheel. For example, in this embodiment there will be nine movements of the blade in one direction and a like number in the opposite direction, or eighteen movements of the blade per revolution of the cam wheel. Thus, when the cam wheel rotates rapidly the blade oscillates or vibrates rather than reciprocates. In consequence, the microscopic teeth, which are generally known to be inherently a part of the cutting-edge of a razor blade, have a rapid sawing action on the hairs of the beard instead of a slow slicing stroke. When the blade is shifted so as to throw the axis of the cam-wheel 31 out of line with the projections 39 and 40, the amount of vibration will be diminished accordingly. Hence, to adjust the length of the vibrations, or in other words to vary the reciprocable throw of the blade, I provide means for adjusting the heads 33 of the pins 32 with reference to the axis of the wheel 31.

These means consist in forming the head 33 eccentric with reference to each pin 32, and arranging to rotate the pins, when desired, in the guard 41, by means of a disk 42, which is non-rotatably fixed on the inner end of the pin 32. By means of the projecting knurled edge 43 the disk may be rotated and it will be maintained in position by friction if the head fits snugly. By means of the slot 44 one side of the disk may be bent out of the normal plane of the disk, and the resiliency of the disk will increase the friction between the disk and the guard. Hence, by rotating the disk 42, the length of the vibrations of the blade may be varied, and this rotation will also vary the position of the blade edge 45 with reference to the guard teeth 46. It will, of course, be necessary to form the cam receiving recess in the blade of sufficient size to permit of unrestricted adjusting movement of the blade relative to the axis of the cam, and to this end the distance between a line drawn through the projections 39, 40 and the inner edge of the recess is greater than one-half the distance between said projections.

In order to provide for conveniently removing the blade from the head I provide the cap 47 which is adapted to partly cover the razor blade, and which is pivoted by means of pins 48 fixed to or integral with the cap and journaled in the head 11 of the frame. The pins 48 are fixed to lugs 49 projecting from the edge of the cap 47, and are journaled in bores 50 in the head 11; and, in order to assemble the cap on the head, slits 51 are cut in the cap so that the lugs 49 may be bent outwardly sufficiently to allow the pins 48 to enter the bores 50, and the lugs are then bent back to their normal positions. The cap is held closed by means of a clip 52 which passes over the ends of the guard.

In order to reduce the friction between the blade and the guard and cap I provide recesses 53, 54, 55, and 56 in the guard and cap, thus providing narrow surfaces 57, 58, 59, and 60, which come in contact with the blade. By these means I prevent any binding of the blade due to large friction surfaces, and insure lubricating of the blade by allowing soap solution to work into the recesses, and, hence, to the friction surfaces. In fact this arrangement is such that the blade substantially floats in the guard, held in place by the soapy film. And the recess 53 not only in this manner reduces the friction, but it allows the soap solution to pass much more freely into the friction surfaces, and also provides a recess for the accumulation of the beard which is shaven from the face, reducing the tendency of the beard to clog up under the edge of the razor. This tendency is still further reduced by making the walls of the recess 53 non-parallel so that the recess is wider towards the rear.

I also provide means for regulating the speed of rotation of the cam-wheel 31, and, hence, the frequency of the vibration of the razor blade. These means comprise a spring member 62 which is fixed in any suitable manner to a pin 63 journaled in the wall of the head and rotated by means of a pair of beveled gears 64. The spring 62 is curved in any suitable manner, such as is indicated, and, as the pin 29 is rotated to vibrate the blade, the pin 63, carrying with it the spring 62, will be rotated correspondingly. The arms of the spring 62 are curved, and the

length of the arms is such as to allow the ends 65 of the springs as they rotate normally to reach substantially to the surfaces 66 of the head. But, if the rotation of the pin 29 becomes too rapid, the centrifugal force, together with more or less air pressure, will cause the arms of the spring 62 to straighten somewhat, and thus cause the ends 65 to come in contact slightly with the surfaces 66 and thus retard the motion of the spring and pin. By this means the frequency of the blade will be maintained substantially constant and at such a rate as will just allow the ends 65 of the springs to pass by the surfaces 66; and the frequency of the vibrations of the blade will, of course, depend upon the adjustment of the spring with reference to these surfaces.

The various shafts of the gear-wheels 22 to 27 are all journaled by their ends in a framework 70. This framework comprises a tubular shaped member with openings 71 formed in the walls thereof, but with annular portions 72. The tubular member 70 fits snugly in the tubular casing 10. The arrangement is such that, by separating the walls 73 somewhat further apart, that is, by pressing inwardly the annular portions 72 which are furthest from the walls 73, the walls 73 may thus be separated sufficiently to allow the ends of the various shafts to slip into their proper bearings, and the walls 73 may then be pressed together to their normal positions. The gearing then forms a unitary structure which may be slipped into place in the casing 10 with the inner end held properly in place by means of lugs 75, projecting into recesses in the head 11, and when so arranged the gear 27 will properly mesh with the gear 28. The frame 70 is then held snugly in place by means of a washer 76 backed by the tubular casing 77 which connects the casing 10 with the handle 12. The washer 76 forms a bearing for the shaft 20. The head 11 is threaded into the adjacent end of the casing 10 as indicated.

The handle 12 is rotatably mounted on the end of the casing 77, and the spring motor is arranged so that, when the handle 12 is rotated with reference to the casing 10, the spring 14 is tightened, and a pawl 80 backed by a spring 81 and coacting with the teeth 82, which are fixed with reference to the handle 12, holds the handle in its rotated position with reference to the casing. When the handle is released the tension of the spring tends to rotate the shaft 20 and thus to vibrate the razor.

Within the handle is a ratchet disk 83 which carries the teeth 82. This disk has projecting lugs 84, which alternate with lugs 85 fixed to the cap 86 of the handle. A disk 87 has an annular flange 88 which is screwed into the tube 77 after the collar 89 of the handle has been placed over the tube. A gasket 90 is used to prevent dirt or moisture working into the interior of the handle. It will be seen that the razor may be easily taken apart merely by unscrewing the cap from the handle to get at the motor, and by unscrewing the tube 77 from the casing 10 to remove the gearing as a unit, and by unscrewing the head from the casing to get at the interior of the head.

I claim as my invention:

1. In a safety razor, a tubular casing, a tubular frame mounted in the bore of said casing, a system of gears and shafts for said razor, the shafts being journaled in the walls of said frame and the gears being fixed to their respective shafts and meshing with each other, so as to form an operative series of gears, a razor head threaded into one end of said casing and a handle threaded into the other end of said casing, said head and handle preventing relative movement of said frame and casing.

2. In a safety razor, a tubular frame adapted to have its opposite sides sprung apart, a series of gears, shafts for said gears, the ends of said shafts being journaled in the said opposite sides, a tubular casing, the bore of said casing having substantially the same diameter as the outer diameter of said frame, said frame being mounted in said bore, a razor blade head threaded into one end of said casing and gear driving means threaded into the other end of said casing, and means operatively connecting said gears with the razor blade of said head, and means operatively connecting said gears with said driving means.

3. In a safety razor a blade having a recess in the back thereof, said recess having similar cam surfaces on the opposite sides of said recess, a frame, said blade being slidably mounted in said frame, a cam-wheel rotatably mounted in said frame within said recess, and means for rotating said wheel, said wheel having projecting teeth on its periphery, and the cam surfaces of said recess having projecting teeth adapted to coact with the teeth of said wheel, and means for shifting said blade with reference to said wheel to vary the reciprocable throw of said blade.

4. In a razor, a tubular casing, a flexible tubular frame mounted in said casing, operating means mounted in said frame, a razor blade head screwed into one end of said casing, a second casing screwed into the other end of said tubular casing, a razor blade movably mounted in said head and being operatively connected with said operating means, and driving means mounted in said second casing and being operatively connected with said operating means.

5. In a razor, a casing, a frame removably mounted in said casing, operating means mounted in said frame, a razor blade head removably fixed in one end of said casing, a second casing fixed to the other end of said

first mentioned casing, a razor blade being movably mounted in said head and being operatively connected with said operating means, and driving means fixed to said second casing and being operatively connected with said operating means, said frame being removable from said first mentioned casing by removing said head or said second casing.

6. In a safety razor a flat razor blade slidably mounted in said razor, said blade having a cam surface on one edge thereof, a cam wheel rotatably mounted adjacent the cam surface and adapted to coact with said surface, means for rotating said wheel, and means for reducing the length of the said surface with which said wheel coacts to vary the reciprocable throw of said blade.

7. In a safety razor a blade, said blade having a recess in the central portion of the back edge thereof, and having two cam surfaces projecting into said recess, said surfaces being positioned so that a line connecting the points of maximum projection of said surfaces is substantially parallel with the cutting edge of said blade, a cam wheel rotatably mounted between the said cam surfaces and adapted to coact with said surfaces, means for rotating said wheel, and means for shifting said blade in a direction at right angles to said edge.

8. In a safety razor, a tubular frame, a series of gears, shafts for said gears, the ends of said shafts being journaled in the sides of said frame, a tubular casing, the bore of said casing having substantially the same diameter as the outer diameter of said frame, said frame being mounted in said bore, a razor blade head threaded into one end of said casing and gear driving means threaded into the other end of said casing, means operatively connecting said gears with the razor blade of said head, and means operatively connecting said gears with said driving means.

9. In a safety razor a razor blade mounted for oscillatory movement in said razor, said blade having a cam surface on one edge thereof, a cam wheel rotatably mounted adjacent the cam surface and adapted to coact with said surface, means for rotating said wheel, and means for shifting the line of oscillations of said blade with reference to the axis of said wheel to vary the oscillatory throw of said blade.

10. In a safety razor, a tubular casing, a tubular frame mounted in the bore of said casing, a system of gears and shafts for operating said razor, the shafts being journaled in the walls of said frame and the gears being fixed to their respective shafts and meshing with each other, so as to form an operative series of gears, a razor head fixed to one end of said casing and a handle fixed to the other end of said casing, said head and handle preventing relative movement of said frame and casing.

11. A safety razor blade having a recess in the back thereof, said blade having similar cam surfaces projecting into the opposite sides of said recess, a line connecting the innermost points of said cam surfaces being substantially parallel with the cutting edge of said blade, the distance from a point midway between said innermost points to any other point in the edge of said recess being greater than its distance from said innermost points.

12. In a razor, a casing, a frame mounted in said casing, operating means mounted in said frame, a razor blade head fixed in one end of said casing, a second casing fixed to the other end of said first mentioned casing, a razor blade being movably mounted in said head and being operatively connected with said operating means, and driving means fixed to said second casing and being operatively connected with said operating means, said frame and said operating means being removable as a unit from said first mentioned casing.

13. A safety razor blade having a cam-receiving recess in the rear side thereof, said recess having two integral portions of said blade projecting angularly into said recess from opposite sides thereof to provide cam surfaces, the innermost parts of said portions being alined substantially parallel with the front edge of the blade, the depth of said recess from the line of said parts to the innermost edge of said recess being substantially greater than one-half of the distance between said parts.

14. A blade for a cam-operated safety razor comprising a wafer-like member having a cam-receiving recess therein provided with cam surfaces extending into said recess from opposite sides thereof, said surfaces being angular in shape and arranged to position the high-points thereof substantially on a line parallel with the front edge of said member, the depth of said recess being such that the distance between the line of said high-points and the inner edge of said recess is greater than one-half the distance between said high-points.

15. In a safety razor, a blade having a cam receiving recess in the back thereof, said recess having similar cam surfaces positioned on the opposite sides of said recess on a line substantially parallel with the front edge of said blade, a frame adapted slidably to receive said blade, a handle fixed to said frame at an acute angle to said blade, a cam-wheel mounted in said frame for rotation in said recess in said blade, said cam wheel being mounted with its axis of rotation at right angles to said blade and being flat and thin so that the wheel will lie substantially in the plane of said blade, and means mounted in said handle for rotating said cam wheel.

16. In a razor, the combination of a tubular casing, a flexible tubular frame removably mounted in said casing, a train of gears mounted in said frame, a razor blade head mounted on one end of said casing, a razor blade movably mounted in said head and operatively connected with said train of gears, a second casing mounted on the other end of said first mentioned casing, and driving means mounted in said second casing and operatively connected with said train of gears.

17. In a razor, the combination of a flat cam mounted for rotation on a fixed axis perpendicular to the plane of said cam, said cam having an odd number of radially extending projections spaced symmetrically about the periphery thereof, and a razor blade mounted for oscillatory movement substantially in the plane of said cam, said blade including a recess therein to receive said cam and a pair of diametrically opposed cam surfaces terminating in high-points which are alined substantially parallel to the front edge of the blade, the relative arrangement of the cam and blade being such that when any one of the projections on said cam is in engagement with either of said high-points the opposite high-point will be intermediate two of the projections on the opposite side of the cam.

18. In a safety razor, the combination of a razor blade having a cam-receiving recess therein provided with a pair of diametrically opposed cam surfaces extending inwardly of said recess and alined substantially in parallelism with the front edge of the blade, and a cam for imparting a rapid oscillatory movement to said blade, said cam comprising a member mounted between said cam surfaces for rotation on an axis perpendicular to the plane of said blade and having an odd numbererd series of cam-surface engaging projections thereon spaced equidistantly about the periphery of said cam.

19. In a safety razor, the combination of a blade having a cam-receiving recess therein provided with inwardly projecting diametrically opposed cam surfaces, and a blade vibrating cam mounted for rotation within said recess, said cam having an odd numbered series of points arranged in true symmetry about the periphery of said cam for successive engagement with first one and then the other of said cam surfaces.

20. In a safety razor, the combination of a blade provided with a cam receiving recess having angular cam surfaces projecting into said recess from opposite sides thereof, and a cam mounted for rotation in the plane of said blade, said cam having an odd number of points thereon to successively engage said cam surfaces in the rotation of said cam, there being more than one of said points to produce a rapid oscillatory movement of said blade.

21. In a safety razor, the combination of a blade having a cam receiving recess therein provided with inwardly facing opposed cam surfaces, and a blade vibrating cam mounted for rotation within said recess, said cam having a series of two or more points arranged in substantially true symmetry about the periphery of said cam for successive engagement with first one and then the other of said cam surfaces.

22. In a safety razor, the combination of a blade having a cam receiving recess therein provided with cam surfaces facing inwardly from opposite sides thereof, a motor driven shaft, and a blade vibrating cam mounted on said shaft for rotation within said recess, said cam having a series of cam points thereon arranged in substantially true symmetry about the periphery of said cam for successive engagement with first one and then the other of said cam surfaces whereby to impart a high speed reciprocatory movement to said blade.

In testimony whereof, I hereunto set my hand.

RUSSELL P. HARSHBERGER.