H. L. MOTTER.

BARROW.

APPLICATION FILED AUG. 21, 1912.

1,068,359. Patented July 22, 1913.

Fig. 1.

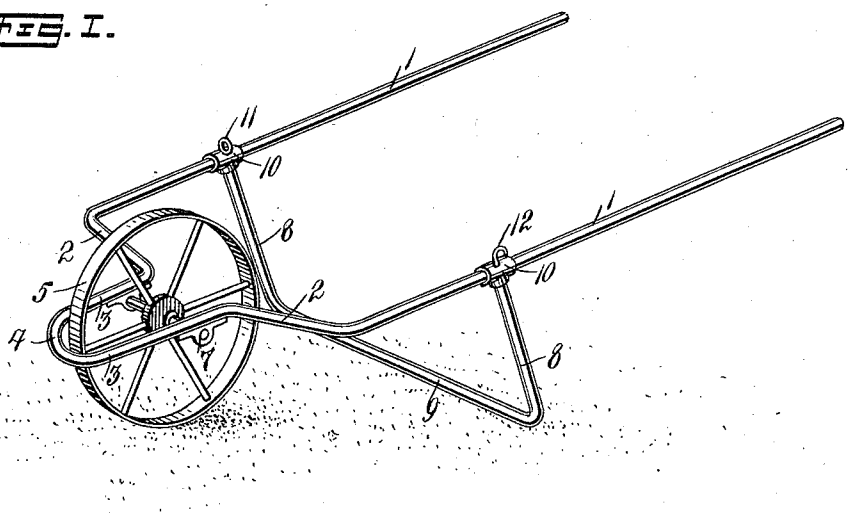

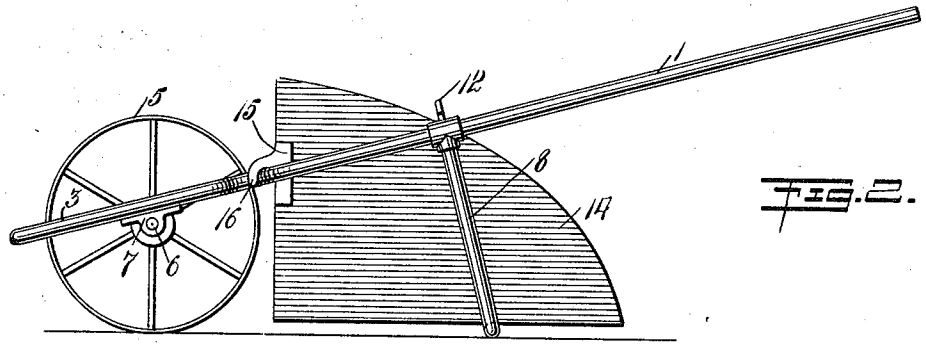

Fig. 2.

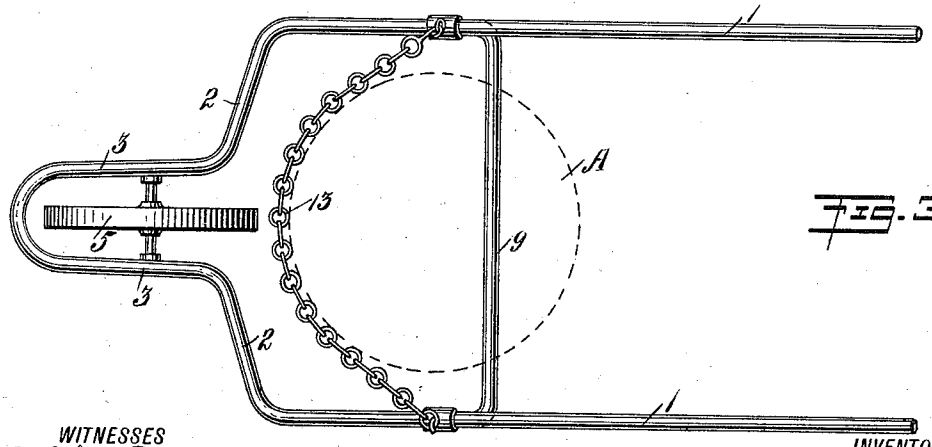

Fig. 3.

WITNESSES

G. Robert Thomas

J. J. Caughey

INVENTOR

Harry L. Motter

BY Munn & Co

ATTORNEYS

COLUMBIA PLANOGRAPH CO., WASHINGTON, D. C.

UNITED STATES PATENT OFFICE.

HARRY L. MOTTER, OF NEW YORK, N. Y.

BARROW.

1,068,359. Specification of Letters Patent. Patented July 22, 1913.

Application filed August 21, 1912. Serial No. 716,172.

To all whom it may concern:

Be it known that I, HARRY L. MOTTER, a citizen of the United States, and a resident of the city of New York, borough of Manhattan, in the county and State of New York, have invented a new and Improved Barrow, of which the following is a full, clear, and exact description.

The object of this invention is to provide a cheap, simple and easily constructed barrow for general purposes which eliminates the necessity of lifting from the ground the load to be carried in order to place it on the barrow.

The invention consists in a certain improved construction and arrangement of parts for this purpose which will first be described in connection with the accompanying drawings and will then be more particularly pointed out in the claims.

In the drawings Figure 1 is a perspective view of the barrow, Fig. 2 is a side view of the barrow bearing a detachably connected receptacle for containing loose material, Fig. 3 is a plan of the barrow as it appears when used to transport a barrel, box or other like load.

The barrow consists essentially of three connected parts—frame bars, the rear ends of which constitute handles; a wheel supported in the front portion of the frame bars; and a U-shaped member extending between and depending from the frame bars to which it is rigidly secured by its legs. It is preferred that this U-shaped member shall be adjustable lengthwise on the frame bars, but provision in such case is made for securing the same rigidly in its adjusted position.

In the structure shown in the drawings, the frame bars comprise spaced and substantially parallel sides 1, the rear ends of which serve as handles, the forward portions of the bars beyond the parallel sides 1 being convergent as at 2, beyond which portions they extend forwardly and in parallel relation as at 3, the ends of these portions joining in front as at 4, the conformation described being such that a single pipe bar, or other bar, preferably cylindrical in cross section, may be conveniently availed of in the making thereof. Between the spaced forward portions 3 is a wheel 5, provided with a suitable axle 6, resting in bearings 7 secured to said portions 3.

Carried by the sides 1 and extending between the frame crosswise of the barrow is the depending U-shaped member, which, like the side bar portions of the frame, can conveniently be made of a single bar of metal, bent into appropriate shape. This member is tightly secured to the sides 1 by its legs 8 which depend from and are fastened to the same. For this purpose, and in order to provide at the same time for a certain adjustability of the U-shaped member, I secure its legs 8 to tubular T's 10 or equivalent elements, which fit snugly on the side bars 8 and can slide on and lengthwise of the same, being secured rigidly in their adjusted position by suitable instrumentalities. The particular means for thus securing the U-shaped member in position may be varied; the devices shown for this purpose in the drawing consist of adjustable set screws 11, 12. For convenience, and as a ready means of applying to the barrow a retaining chain or the like as hereinafter described, the head of one of the set screws—screw 11—is fashioned as an eye, while the head of the other screw 12 is hook-shaped. The horizontal intermediate portion 9 of the U-shaped member connecting the legs 8 is the part upon which the load to be carried rests, and is placed quite close to the ground in order to bring the center of gravity of the load as low as practicable. The U-shaped member serves also as the legs of the barrow, and as a cross brace as well. Indeed there is no cross brace back of the U-shaped member. The whole space between the side bars and handles back of that point is entirely open and unobstructed.

Referring now to Figs. 1 and 3, A, Fig. 3, denotes any article (say a barrel) to be transported on the barrow. In order to load this article upon the barrow, the latter is placed in front of the article, and is then drawn back until the U-shaped carrying member between the sides 1 is close to the article; the article next is tilted backward far enough to permit the cross bar 9 to pass beneath it from the front, and the barrow is then drawn back to bring the cross bar 9 into its proper position under the article A, a little to the rear of the center of gravity of the article. To prevent the article from falling off the bar 9 when lifted from the ground, a chain 13, or equivalent element, such as a rope or belt, is extended across the barrow frame in front of the article and secured at its ends to the sides 1, the hook on

screw 12, and the eye on screw 11 furnishing a convenient means for this purpose, as indicated in Fig. 3. The chain, of course, can be adjusted to any length desired. If now the barrow frame is lifted by the handles, the article will tilt forward until it brings up against the chain 13, and will rest against that chain and upon the carrying bar 9 of the U-shaped member, in which position it may safely be transported by the barrow to any desired point.

An attachment in the shape of a flat-bottomed receptacle 14 is provided, to be used in case it is desired to employ the barrow to transport loose material. This receptacle is adapted to rest upon the cross bar 9, and is provided at its front corners with hooks 16 on a reinforcing band 15, which hooks catch upon the convergent portions 2 of the frame bars, in order to furnish a support for the front end of the receptacle. This device is merely an attachment for use only when loose material is to be transported, and forms no part of the permanent barrow structure.

Having described my invention and the best way now known to me of carrying the same into practical effect, what I claim herein as new and desire to secure by Letters Patent is:

1. In a barrow, side bars, the rear portions of which constitute the barrow handles, a wheel mounted in the front portions of the side bars, and a depending U-shaped load-carrying member located in the barrow back of the wheel, extending between and rigidly secured by its legs to the side bars, with the load supporting cross-bar 9 connecting said legs located adjacent to the ground, the space between the side bars back of said U-shaped member being open and unobstructed to permit the article to be carried to enter the space between the side bars, from the handle end of the barrow and to pass therethrough to the U-shaped load-carrying member, substantially as hereinbefore set forth.

2. In a barrow, side bars, the rear portions of which constitute the barrow handles, a wheel mounted in the front portions of said side bars, a depending U-shaped load-carrying member extending between said side bars in rear of the wheel, having its legs connected to, and adjustable on and lengthwise of, said side bars, and means for rigidly securing the same in their adjusted position, substantially as and for the purposes hereinbefore set forth.

3. In a barrow, side bars, the rear portions of which constitute the barrow handles, a wheel mounted in the front portions of the side bars, a depending U-shaped load-carrying member extending between, and rigidly secured to, the side bars in rear of the wheel, a support 13 located between the U-shaped member and the wheel, extending across between, and secured to, the side bars, the space between the side bars back of the U-shaped member being entirely open and unobstructed, substantially as and for the purposes hereinbefore set forth.

4. A barrow structure consisting essentially of frame bars, the rear ends of which constitute handles, a wheel mounted in the front portion of the frame bars, and a U-shaped load-carrying member in rear of the wheel, extending between and depending from the frame bars to which it is rigidly secured by its legs, said U-shaped load carrying member constituting also the supporting legs of the barrow and a cross brace for stiffening the barrow structure, substantially as hereinbefore set forth.

5. A barrow comprising side bars, the rear ends of which constitute handles, a wheel mounted in the front portion of the frame bars, a U-shaped load-carrying member in rear of the wheel, extending between and depending from the frame bars, and rigidly secured to the same, and a detachable and removable receptacle adapted to rest upon the bottom cross-bar 9 of the U-shaped member, and provided at its front with hooks to catch over upon the side bars, substantially as and for the purposes hereinbefore set forth.

In testimony whereof I have signed my name to this specification in the presence of two subscribing witnesses.

HARRY L. MOTTER.

Witnesses:
PHILIP D. ROLLHAUS,
LAURENCE J. GALLAGHER.

Copies of this patent may be obtained for five cents each, by addressing the "Commissioner of Patents, Washington, D. C."