May 8, 1962 F. W. BARNES 3,033,443

APPARATUS FOR SIGNALING THE PRESENCE OF MATTER IN A MAILBOX

Filed Oct. 4, 1960

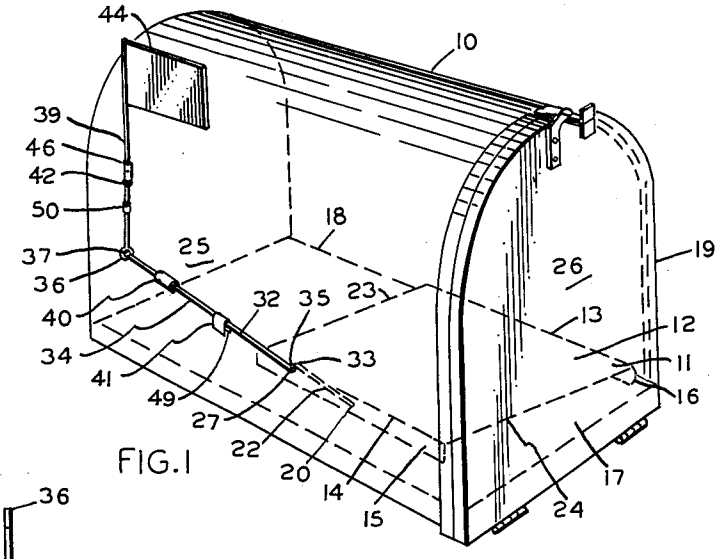

FIG.1

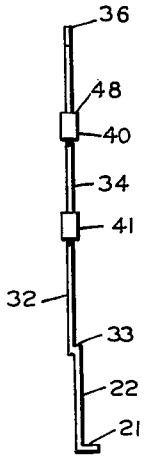

FIG.3

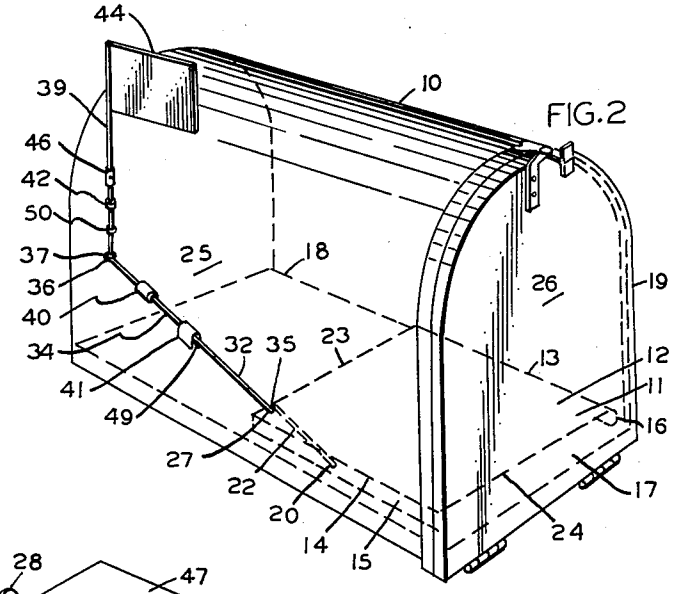

FIG.2

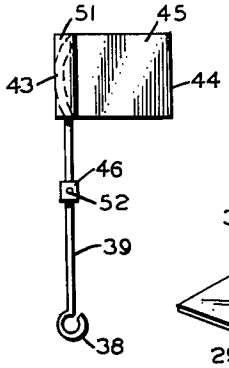

FIG.4

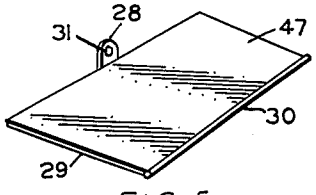

FIG.5

INVENTOR.
FRANK W. BARNES
BY Harold D. Jones Jr
ATTORNEY

United States Patent Office 3,033,443 Patented May 8, 1962

3,033,443
APPARATUS FOR SIGNALING THE PRESENCE OF MATTER IN A MAILBOX

Frank W. Barnes, St. Petersburg, Fla., assignor to Edwin R. Sturdivant, Decatur, Ga.

Filed Oct. 4, 1960, Ser. No. 60,453
2 Claims. (Cl. 232—34)

This invention relates to a receptacle having a visual signal which is automatically raised by the placing of matter therein and more particularly to a mailbox having a signal flag mounted externally thereon, a platform placed tiltably therein, and a rod structure connecting the platform and signal flag so that mail placed on the platform will cause movement of the signal flag and automatically indicate the presence of mail in the box.

In describing this invention, reference will be made to the accompanying drawings in which like characters designate corresponding parts in all figures and in which:

FIGURE 1 is a perspective view of the mailbox showing the position of the signaling apparatus elements when there is no mail or other matter resting on the platform element of the signaling apparatus.

FIGURE 2 is a perspective view of the mailbox showing the position of the signaling apparatus elements when there is mail or other matter resting on the platform element of the signaling apparatus.

FIGURE 3 is a detail view of the connecting rod element of the signaling apparatus as it would appear if viewed from above the mailbox and if it were entirely visible.

FIGURE 4 is a detail view of the vertical rod element of the signaling apparatus as it would appear if viewed from the side of the mailbox to which it is slidably attached.

FIGURE 5 is a perspective view of an alternate form of the platform element shown in FIGURES 1 and 2.

These drawings and the detailed description which follows disclose a preferred specific embodiment of this invention, but the invention is not limited to the exact details disclosed since it may be embodied in other equivalent forms.

Box 10 is a mailbox of standard construction to which, by making minor changes, the weight actuated signaling apparatus is attached. The nature of these minor changes in the box 10 will subsequently become apparent. The signaling apparatus can most readily be understood by considering it to consist of three basic structural elements. The first element is a platform 11 which has a flat rectangular surface 12 on which mail and similar items may be placed and which has one edge 13 rolled and the opposite edge 14 flanged. The roll 16 of edge 13 and the flange 15 of edge 14 tend to increase the rigidity of the platform 11 and, in addition, the roll 16 and the flange 15 provide support for the platform 11 so as to position its surface 12 substantially parallel to the bottom 17 of the box 10 when the platform 11 is resting on the bottom 17 of the box 10, as shown in FIGURE 2.

The roll 16 at edge 13 also serves to prevent platform edge 13 from becoming bound in the corner or joint 18 of the box 10, which is formed by the intersection of its side 19 and bottom 17. Such binding of edge 13 would tend to interfere with the free movement of the platform 11, from its position shown in FIGURE 1 to that shown in FIGURE 2, about an axis which generally coincides with or is parallel and adjacent to edge 13. The importance of this movement will subsequently become apparent.

The flange 15 at edge 14 of the platform 11 also provides the surface through which a hole 20 is made to receive the hook 21 of the connecting rod 32. The hole 20 is located approximately midway along the length of

the flange 15. This location of the hole 20 provides the optimum support point available along edge 14 for support of all portions of the platform 11 when it is in the up position shown in FIGURE 1 and minimizes the likelihood and effect on apparatus operation of the distortion of the flat surface 12, or of the tipping of the platform 11, when mail is placed near edge 23 or 24 of the platform 11.

The width of the platform 11 between opposite edges 13 and 14 is slightly less than the width of the bottom 17 of the box 10 between box sides 19 and 25. This width insures that edge 14 and segment 22 of the connecting rod 32 will be free to move, without interference from box side 25, in a plane substantially parallel and near to box side 25, when the platform 11 is moved from the up position shown in FIGURE 1 to the down position shown in FIGURE 2, and that, during such motion, the roll 16 of edge 13 will be generally in contact with and positioned by the bottom 17 and side 19 of the box 10. The length of the platform 11 measured along edge 14 is approximately twice the distance from the hole 20 to edge 24, where edge 24 is slightly recessed from the front 26 of the box 10 and the location of the hole 20 is coordinated with the location of the box aperture 27 by the length of segment 22 of the connecting rod 32.

An alternate form of the platform element is shown in FIGURE 5. This form of the platform element 47 is most suitable where the material used for construction has great inherent rigidity. Thus, the flange 15 and the roll 16 of the platform 11 are not necessary for rigidity purposes and the face 29 of the platform 47 rests directly on the bottom 17 of the box 10 when platform 47 is substituted for platform 11 in FIGURE 2. The tab 28 has a hole 31 into which the hook 21 is loosely inserted. Edge 30 of the platform 47 is rounded to prevent binding with the corner or joint 18 of the box 10.

The second basic structural element of the signaling apparatus is the connecting rod 32, which consists of three segments, with segment 22 being internal to the box 10, segment 33 passing through the box aperture 27 and segment 34 being external to the box 10. All three segments of the connecting rod 32 lie in the same substantially horizontal or tilted plane. The segment 22 end of the connecting rod 32 is bent to form the hook 21, which has already been referred to, and which is loosely inserted into the hole 20 of the platform 11. Segment 33 is positioned perpendicular to the side 25 of the box 10 and passes through the box aperture 27 to rigidly connect segments 22 and 34 so that any motion of segment 22 is transmitted to segment 34. Thus, the box aperture 27 and segment 33 serve as a fulcrum point 35 between two portions of the signaling apparatus.

At the segment 34 end of the connecting rod 32 is formed an eye 36 which is loosely connected by a rivet 37 to a similar eye 38 at the bottom end of the vertical rod 39.

Associated with segment 34 is a roller 40, which is placed to rotate and slide freely on segment 34 and which, regardless of its position along the length of segment 34, will tend to maintain a separation between segment 34 and the box side 25 which is at least equal to the thickness 48 of the roller 40. In addition, roller 40 provides a rolling, frictionless contact with the side 25 of the box 10 as rod segment 34 moves. Also associated with segment 34 is a U-shaped metal weight 41 which, as an inverted U having an inside dimension 49 slightly less than the diameter of segment 34, may be movably, but fixedly, forced onto segment 34 at any point along its length so as to vary weight distribution about the fulcrum point 35.

The third basic structural element of the signaling apparatus is the vertical rod 39 of a signal device, which is positioned external to the box 10 and generally perpendicular to the bottom 17 of the box 10. The vertical rod

39 is slidably held in position by eye bolts 42 and 50, which are attached to the exterior of the box 10, and at the topmost end of the vertical rod 39 is a signaling flag 44. The signaling flag 44 consists of the display portion 45 and a rolled edge 51 and is attached to the vertical rod 39 by slightly bending the uppermost portion of the vertical rod 39 and forcing the bend portion 43 of the vertical rod 39 into the rolled edge 51 of the flag 44, as shown in FIGURE 4. The vertical rod 39 carries a lock washer 46 which by a set screw 52 is fixedly, but movably attached to the point along the length of the vertical rod 39 at which it will limit the downward travel of the vertical rod 39 by striking eye bolt 42.

From the foregoing description it is apparent that there are movable portions of the signaling apparatus external to the box 10 and movable portions positioned inside of the box 10 and that the movable external portions are on one side of the fulcrum point 35 and the movable inside portions are on the other side of fulcrum point 35. Thus, by the proper selection of the lengths of segments 22 and 34, which are segments of the connecting rod 32 on opposite sides of the fulcrum point 35, a slight motion of the platform 11 and the hook 21 will result in a significantly larger motion of eye 36 and the vertical rod 39. For example, if segment 34 is three times the length of segment 22, then a one-inch motion of edge 14 of the platform 11 and of the hook 21 will result in approximately three inches motion in the opposite direction of eye 36 and the vertical rod 39.

In addition, by the proper selection of the weights of the various signaling apparatus components on opposite sides of the fulcrum point 35, the portions of the signaling apparatus external to the box 10 are given a moment about the fulcrum point 35 which is equal to or slightly greater than the moment about the fulcrum point 35 of those portions of the signaling apparatus inside of the box 10. Thus, with no mail on the platform 11 and the signaling apparatus in the flag down position as shown in FIGURE 1, the signaling apparatus will be in equilibrium or will rest with the lock washer 46 in contact with eye bolt 42.

The addition of mail or other matter to the platform 11 will increase the moment of the portions of the signaling apparatus inside the box 10 because of the downward pressure of the mail on the platform 11 and the hook 21. This increase in moment about the fulcrum point 35 of the portions inside the box 10 resulting from the addition of mail will cause the moment of the portions inside the box 10 to be greater than that of the portions external to the box 10. As a result, platform edge 14, carrying along the hook 21, will lower to rest on the bottom 17 of the box 10. As the hook 21 is lowered, eye 36 and the vertical rod 39 are raised and the presence of mail in the box 10 is indicated by the associated raising of the signaling flag 44, as shown in FIGURE 2. As previously indicated, the distance the signaling flag 44 is raised in relation to the downward travel of the platform 11 is determined by the relative lengths of segments 22 and 34 of the connecting rod 32.

Since the response of the signaling apparatus to the placing of mail on the platform 11 is a function of weight distribution on each side of the fulcrum point 35, the response of the apparatus may be adjusted by changing the position of the metal weight 41 on segment 34. By fine adjustment with the metal weight 41, even so light an article as a post card or single letter will actuate the signaling apparatus as described above.

The response of the signaling apparatus to mail on the platform 11 will be substantially independent of the location of the mail on the platform 11 with respect to edges 23 and 24. Although the response to mail on the platform 11 will vary slightly with regard to the location of the mail between edges 13 and 14, this effect may be minimized by adjusting the response of the signaling apparatus with the metal weight 41 when the minimum mail weight to which response is desired is placed near edge 13 of the platform 11.

Since the only structural changes which must be made in a mailbox of standard construction in order to add the signaling apparatus are the drilling of a hole for the box aperture 27 and the attaching through the side 25 of the box 10 of the eye bolts 42 and 50 and since the signaling apparatus is easily assembled and placed in position, the addition of the signaling apparatus to existing mailboxes is quickly and conveniently accomplished. Moreover, the removal of the apparatus from a mailbox is also quickly and conveniently accomplished and will leave the mailbox structurally sound and usable.

Whether the signaling apparatus is added to a mailbox as a replacement for or in addition to the manual signal flag normally found on mailboxes, it provides reliable and automatic indication that there is mail or other matter in the mailbox by a significant and clearly visible motion of its signaling flag 44. Yet, a mailbox to which the signaling apparatus has been attached has substantially the same capacity as it had before adding the signaling apparatus and the mailbox operation and function is in no other way impaired by the addition of the signaling apparatus.

What is claimed is:

1. The combination with a mailbox having two ends of a signaling apparatus, comprising a tiltable platform inside the mailbox, a flanged edge on the platform having a hole therein located midway along the length of the flanged edge, a signal device attached to the mailbox, a connecting rod with one end extending toward one end of the mailbox and connected to the signal device and the other end extending toward the other end of the mailbox and having a hook which is inserted into the flanged edge hole, and means for supporting the connecting rod at a point along its length so that motion of the flanged edge and hook in response to inserted mail effects motion of the signal device.

2. The combination with a mailbox, having two ends and a side, of a signaling apparatus, comprising a platform inside the mailbox, a signal device attached to the mailbox, a connecting rod with one end extending toward one end of the mailbox and connected to the platform and the other end extending toward the other end of the mailbox and connected to the signal device, a roller slidably and rotatably placed on the connecting rod in a position to frictionlessly locate the connecting rod with reference to the mailbox side, and means for supporting the connecting rod so that motion of the platform in response to inserted mail effects motion of the signal device.

References Cited in the file of this patent

UNITED STATES PATENTS

1,123,647	Ackman	Jan. 5, 1915
1,195,016	Hillman	Aug. 15, 1916
1,307,242	Courtney	June 17, 1919