(No Model.)

F. McFADDEN.

PISTON PACKING.

No. 455,989. Patented July 14, 1891.

Fig 1.

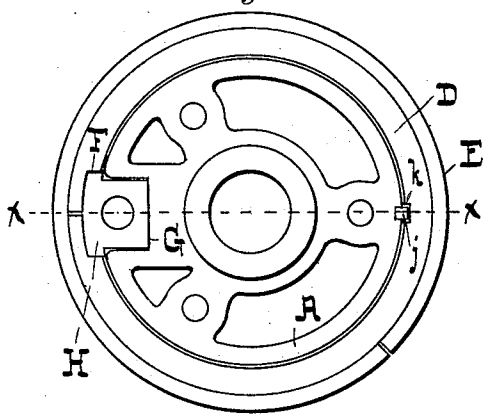

Fig 4.

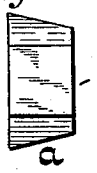

Fig 5.



Fig 6.

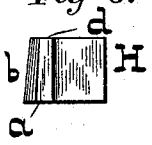

Fig 2.

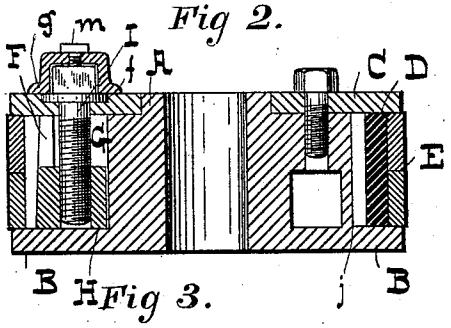

Fig 3.

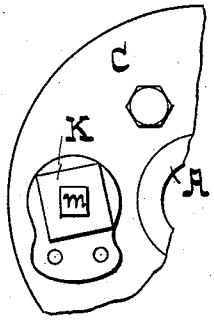

Fig 7.

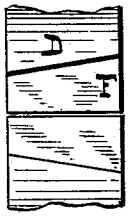

Fig 8.



Fig 9.



-WITNESSES-

Dan'l Fisher
H. C. Sandis

-INVENTOR-

Francis Mc Fadden,
by G. H. W. T. Howard,
Atty.

THE NORRIS PETERS CO., PHOTO-LITHO., WASHINGTON, D. C.

UNITED STATES PATENT OFFICE.

FRANCIS McFADDEN, OF BALTIMORE, MARYLAND.

PISTON-PACKING.

SPECIFICATION forming part of Letters Patent No. 455,989, dated July 14, 1891.

Application filed February 28, 1891. Serial No. 383,245. (No model.)

To all whom it may concern:

Be it known that I, FRANCIS McFADDEN, of the city of Baltimore and State of Maryland, have invented certain Improvements in Piston-Packing, of which the following is a specification.

This invention relates to means whereby the packing-rings of a piston are set out or expanded in diameter and at the same time forced bodily over toward one side of the cylinder to such extent as is necessary to preserve the central position of the piston within the cylinder, as will hereinafter fully appear.

In the description of the said invention which follows reference is made to the accompanying drawings, forming a part hereof, and in which—

Figure 1 is a top view of the improved piston with the follower removed; and Fig. 2, a cross-section of the same complete, the section being taken on the dotted line *x x*. Fig. 3 is a top view of a part of the follower. Figs. 4 to 9, inclusive, are details of the invention.

Similar letters of reference indicate similar parts in all the figures.

Referring to the drawings, A is the central body of the piston, and B the flange upon which the packing-rings are seated.

The follower is denoted by C.

D is the inner and E the outer packing-ring. The outer ring E embodies no novelty in its construction, and therefore needs no further description. The inner ring D is provided with a recess F at the point where it is cut. This recess is wider and deeper at the lower than at the upper edge of the ring, as shown particularly in Figs. 7, 8, and 9, which are respectively an inner face, a top, and an under side view of a part of the same.

G is a pocket formed in the circumference of the body A of the piston, and H a block adapted to rest loosely therein. The outer surface of the block H is segmental and enters the recess F in the inner ring, and the said block has segmental extensions *a*, which also enter or rest in the said recess, as shown particularly in Fig. 1. The outer surface *b* of the block H, including the extensions *a*, is inclined to correspond with the inner surface *c* of the ring D where recessed, and its ends *d* are of the same angle of inclination as the ends of the said recess. The relative sizes of the recess and the block H, exterior of the pocket G, when the piston is first fitted up and in position in the cylinder, are such that the block H will only enter the lower and larger part of the recess F; but when the cylinder and outer packing-ring become worn and the latter has to be set out the block H is raised, and to admit of this movement the said block is threaded interiorly after the manner of a nut, and provided with a bolt I, which passes through the follower C. This bolt has preferably a collar *f*, which rests in a circular depression *g* in the face of the follower; but this arrangement of collar and depression is of no special importance. Upon screwing up the bolt I the block is raised and the ends of the inner ring are separated, thereby increasing the diameter of the ring and also that of the outer one. At the same time the rings are forced bodily over toward the side of the cylinder where the block is situated, and the angles of inclination of the face and the ends of the extensions of the block are such that the outward or bodily movement is exactly one-half of the increased diameter.

In order that the movement of the block H may be communicated alike to both ends of the ring D, the piston-body A at a point diametrically opposite the block H is fitted with a feather *j*, which projects into a groove *k* in the inner ring.

K is a cap secured over the head of the bolt I to lock it and prevent its being turned except when it is required to set up the packing. A small screw *m* serves to hold the cap K to the head of the bolt.

With this invention the piston is at all times held centrally of the cylinder, and the follower C and flange B, which are slightly smaller than the cylinder, cannot come in contact with the same.

I claim as my invention—

1. In combination with a piston having a pocket in the circumference of its body and a feather diametrically opposite the same, a cut packing-ring with a recess situated where the ring is cut, the said recess being deeper and wider at the bottom than at the top of the ring, and a movable block having its outer face and its ends of the same angle as the face and ends of the recess against which

they come in contact, substantially as specified.

2. In combination with a piston having a pocket in the circumference of its body and a feather diametrically opposite the same, a cut packing-ring with a recess situated where the ring is cut, the said recess being deeper and wider at the bottom than at the top of the ring, a movable block having its outer face and its ends beveled and at the same angle as the face and ends of the recess against which they come in contact, and a bolt whereby the said block may be moved in the said recess, substantially as specified.

3. In combination with a piston having a pocket in the circumference of its body, a cut packing-ring with a recess situated where the ring is cut, the said recess being deeper and wider at the bottom of the ring than at the top, and a movable block having its outer face and its ends beveled and at the same angle as the face and ends of the recess against which they come in contact, substantially as specified.

FRANCIS MCFADDEN.

Witnesses:
WM. T. HOWARD,
JNO. T. MADDOX.