Dec. 30, 1924. 1,520,821

W. KAISLING

AUTOMATIC SWITCH

Filed July 9, 1920 3 Sheets-Sheet 1

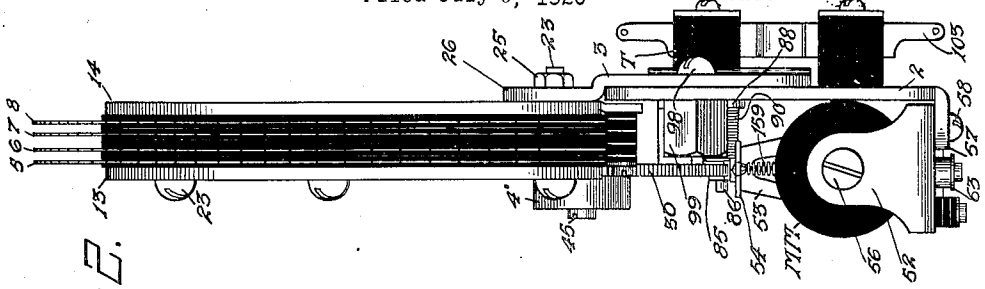

Fig. 2.

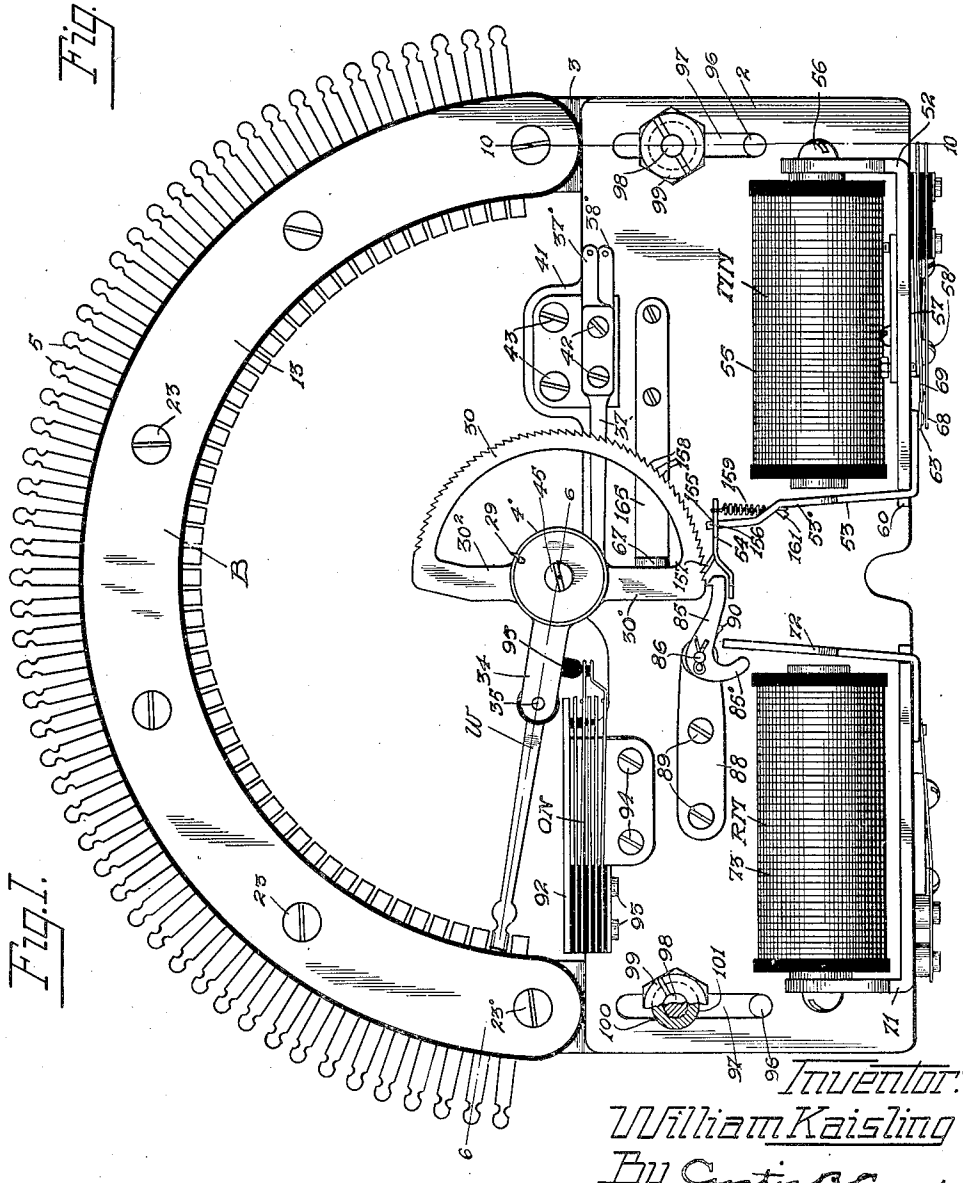

Fig. 1.

Inventor:
William Kaisling
By Curtis B. Camp.
Attorney.

Dec. 30, 1924. 1,520,821

W. KAISLING

AUTOMATIC SWITCH

Filed July 9, 1920 3 Sheets-Sheet 2

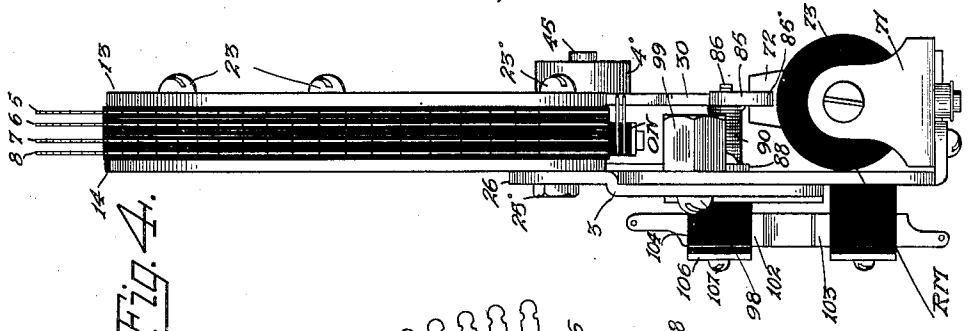

Fig. 4.

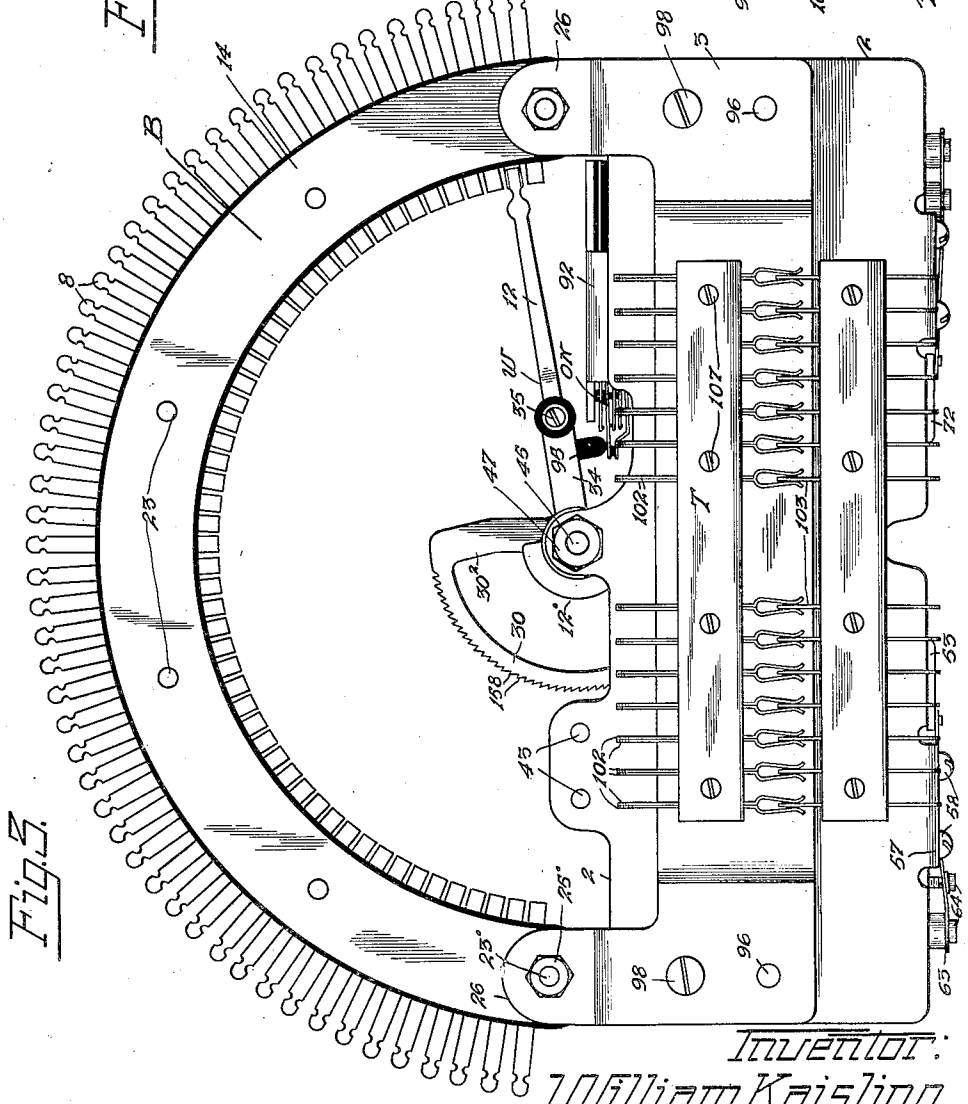

Fig. 5.

Inventor:
William Kaisling.
By Curtis B. Comp.
Attorney.

Dec. 30, 1924. 1,520,821

W. KAISLING

AUTOMATIC SWITCH

Filed July 9, 1920 3 Sheets-Sheet 3

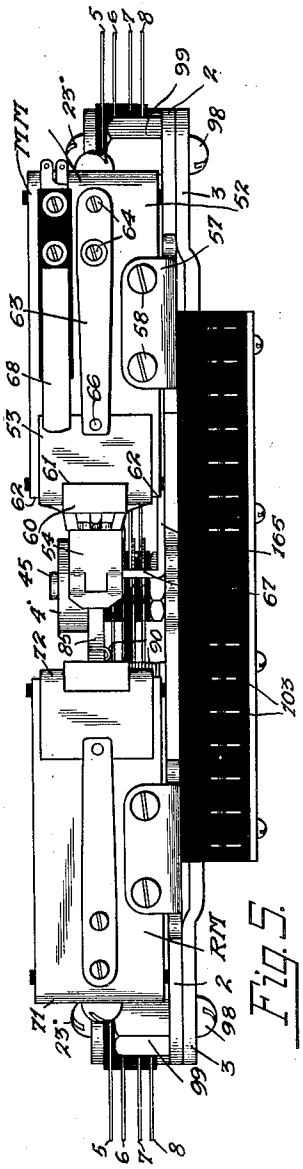

Fig. 5.

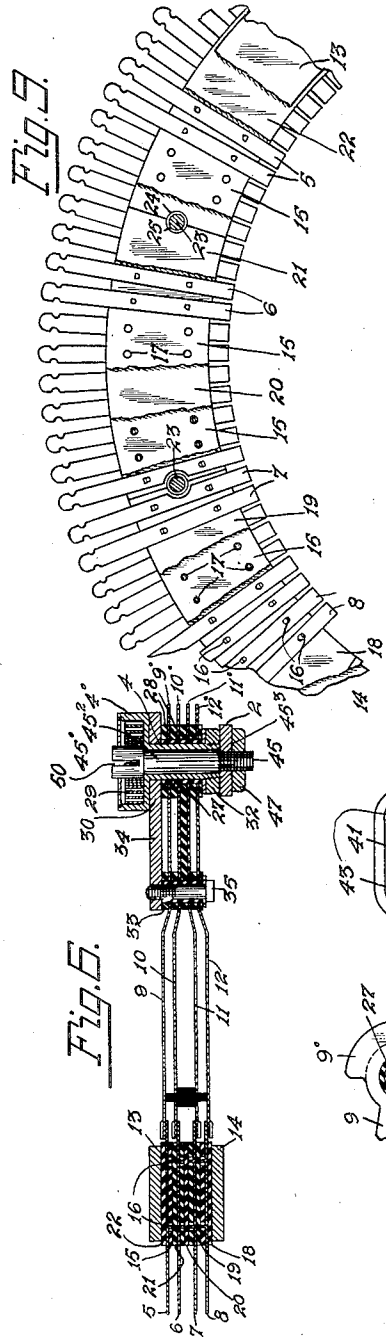

Fig. 6.

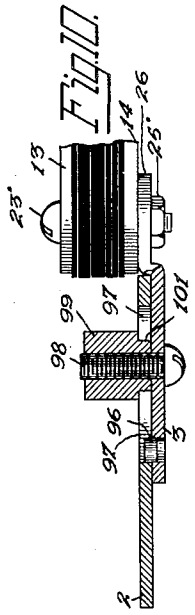

Fig. 10.

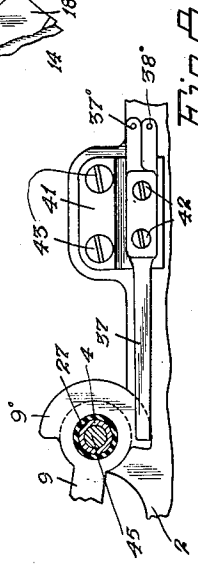

Fig. 8.

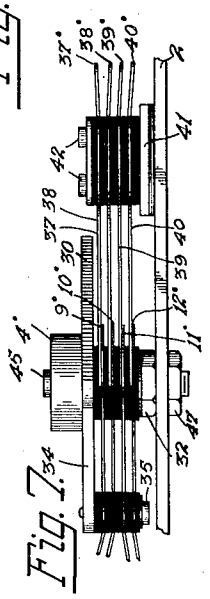

Fig. 7.

Inventor:
William Kaisling
By Curtis B. Camp.
Attorney.

Patented Dec. 30, 1924. 1,520,821

UNITED STATES PATENT OFFICE.

WILLIAM KAISLING, OF CHICAGO, ILLINOIS, ASSIGNOR TO KELLOGG SWITCHBOARD AND SUPPLY COMPANY, OF CHICAGO, ILLINOIS, A CORPORATION OF ILLINOIS.

AUTOMATIC SWITCH.

Application filed July 9, 1920. Serial No. 394,889.

To all whom it may concern:

Be it known that I, WILLIAM KAISLING, a citizen of the United States of America, residing in Chicago, county of Cook, and State of Illinois, have invented certain new and useful Improvements in Automatic Switches, of which the following is a specification.

My invention relates to switches in general and has to do more particularly with switches of the step-by-step type that travel in a single direction during the selecting operation. The switch of my invention is adapted for use in semi-automatic and call distributing systems, but I do not wish to be limited to this use, as it may be used for a variety of purposes without departing from the scope of the invention. An object of my invention is the provision of a switch of the above type that is simple in construction, cheap to manufacture and positive and efficient in its operation.

A further feature of my invention is the provision of a particular pawl and ratchet arrangement in association with a motor magnet for advancing the wipers step by step over the contacts of the bank.

The above features, as well as others, will be more particularly pointed out in the ensuing specification and appended claims.

For a more complete understanding of my invention, reference may be had to the accompanying drawings, in which like reference characters in the several views denote like parts, and in which—

Fig. 1 is a plan view of the switch of my invention;

Fig. 2 is a view from the right of Fig. 1;

Fig. 3 is a rear view of the switch;

Fig. 4 is a view from the right of Fig. 3;

Fig. 5 is a front elevation of the switch;

Fig. 6 is a sectional view along the line 6—6 of Fig. 1;

Fig. 7 shows the wiper carrying hub and associated parts;

Fig. 8 is a plan view thereof, with parts broken away to more clearly illustrate the construction;

Fig. 9 is a view of part of a contact bank with parts broken away to more clearly illustrate its construction and assembly; and

Fig. 10 is a sectional view along the line 10—10 of Fig. 1.

Referring to the structure illustrated in Figs. 1 to 10, the switch comprises a mounting plate 2, to which are secured the various operating parts. The said plate 2 also carries the auxiliary plate 3 to which the bank of contacts B is secured, which latter cooperate with the wipers W carried by hub 4. The said hub 4 is rotatably supported upon the mounting plate 2 in any suitable manner.

The contact bank B may comprise any suitable number of contact sets, and each set may include a test contact 5, an auxiliary contact 6 and a pair of line contacts 7 and 8. Wipers W, of which there are four, cooperate with the contacts, there being a test wiper 9, a wiper 10 associated with the contacts 6, and the line wipers 11 and 12, which latter are associated with the line contacts 7 and 8. The contact bank B is semi-circular and may include fifty-five sets of contacts 5, 6, 7 and 8, radially disposed between the clamping plates 13 and 14. The contact bank B, as a whole, is built up of a plurality of similar arcuate sections, and a detailed description of one will be sufficient. Each semicircular row of contacts, as for example that of contacts 5, is built up of five arcuate sections 15, each arcuate section having mounted thereon eleven contacts 5. Each contact is provided with a pair of ears 16, angularly disposed, preferably integrally formed with the said contact. Openings 17 in the sections 15, in proper alignment with the ears 16 of the contacts, are provided, but these openings are slightly smaller than the ears and receive the ears 16 by a forced fit, thus holding the said contacts radially disposed upon the arcuate section. The sections 15 are of suitable insulating material, such as micarta. In assembly, sectional plates 18, conforming in shape with the arcuate plates 15 and of suitable insulation, are placed between the semi-circular clamping plates 14 and the arcuate sections which carry the contacts 8. Sectional strips 19, 20 and 21 also arcuate in shape and of insulating material, are placed between the arcuate sections 15, which carry the contacts 7, 6 and 5 to properly insulate the contact rows one from the other, and also properly space them. (Refer to Fig. 6.) Sectional arcuate plates 22 of suitable insulation material are placed between the contacts 5 and the semi-circular

clamping plate 13 to insulate the said contacts 5 from the clamping plate. Clamping screws 23 pass through suitable openings in the clamping plate 13 and openings 24 formed by semi-circular notches 25 cut in the ends of the arcuate sections 15 and insulation sections 18, 19, 20, 21 and 22. The screws 23 have screw-threaded engagement with suitable tapped orifices in the clamping plate 14 to securely clamp the arcuate sections 15 which carry contacts 5, 6, 7 and 8 and insulation sections 18, 19, 20, 21 and 22 between the semi-circular clamping plates 13 and 14 to form the contact bank B.

The contact bank B is secured to the auxiliary plate 3 by means of the end clamping screws 23', which pass through suitable openings in the ears 26 integrally formed with the auxiliary plate 3, the nuts 25' having screw-threaded engagement with the screws 23'.

Wipers 9, 10, 11 and 12, which cooperate with the contacts 5, 6, 7 and 8, are alike. For example, wiper 9 has a disc-shaped portion 9' provided with an orifice of a size to permit it being slipped over the hub 4. The disc portions 9', 10', 11' and 12' of all the wipers 9, 10, 11 and 12 are slipped over the hub 4 but insulated therefrom by means of a sleeve of insulation 27 and from each other by means of the insulation washers 28. The hub 4 has integrally formed therewith a cup-shaped portion 4', which forms a container for the motor spring 29. A sector 30 is provided having a central orifice of a size to permit it being slipped over the hub 4 and resting between the cup portion 4' of the said hub and an insulation washer 28 which insulates the disc portion 9' of the wiper 9 from the sector. The sector 30 and the discs of wipers 9, 10, 11 and 12 are clamped in place upon the hub 4 by means of the clamping nut 32, which has screw-threaded engagement with the threaded portion of the hub 4. Wipers 9, 10, 11 and 12 have drilled intermediate portions and are properly spaced by means of insulation washers 33 and are secured at these intermediate portions to an arm 34 of sector 30 by the screw 35. The latter engages a suitable tapped orifice in the forward end of the arm, and said screw is suitably insulated from the wipers by a bushing. The free ends of the wipers are flared for the purpose of forming engaging or contacting surfaces with the contacts 5, 6, 7 and 8. The disc portions 9', 10', 11' and 12' form contacting surfaces for wiper brushes 37, 38, 39 and 40 suitably mounted upon a bracket 41 by means of the screws 42, the said brushes being suitably insulated from the screws 42 and from each other. The bracket 41, upon which the brushes 37, 38, etc., are mounted, is secured to the mounting plate 2 by means of the screws 43. The wiper brushes 37, 38, 39 and 40 contact, respectively and permanently, with the disc portions 9', 10', 11' and 12' of the wipers 9, 10, 11 and 12, so the said wipers 9, 10, 11 and 12 are always conductively connected to terminals 37', 38', 39' and 40'. The hub 4, which carries the wipers 9, 10, 11 and 12 and sector 30, is as a whole rotatably secured to the mounting plate 2 by means of a combined motor spring tensioning and bearing screw 45. The hub 4 is provided with a central opening through which the screw 45 passes. The screw 45 is provided with a slotted head 45' and a reduced portion 45^2, this reduced portion 45^2 forming a bearing about which the hub 4 as a whole rotates. The shoulder formed by the reduced portion rests against the surface of the cup-shaped portion 4' and the threaded end of the reduced portion 45^2, which protrudes through a suitable orifice in plate 2 is adapted to receive a nut 47, which holds the screw 45 in rigid relation with plate 2 by clamping said plate between shoulder 45^3 (integral with 45) and said nut 47. A motor spring 29 fits into the cup-shaped portion 4' of the hub 4, the said spring having its one end fastened to the cup portion 4' of the hub 4, and its other end resting in the slot in the head of the bearing screw 45. A cover-cap is provided which covers the spring cup container 4'. To give the proper tension to the spring 29, the nut 47 is loosened and the screw 45 is turned to the right or left, as the case may be, by means of a suitable tool inserted in the slot 50, and when the proper tension is obtained, the nut 47 is again tightened to hold the screw 45 against rotation and also hold the spring 29 at its properly adjusted tension.

The motor magnet M M, which is adapted to move the wipers 9, 10, 11 and 12 over bank contacts 5, 6, 7 and 8, includes a heel iron 52, an armature 53 and a driving pawl 54. The electromagnet 55 is suitably secured to the pole piece 52 by means of a screw 56, which has screw-threaded engagement with a suitable tapped opening in the core of the electromagnet. The mounting plate 2 has integrally formed therewith an angular extension or bracket 57, the said magnet M M as a whole being secured thereto by means of the screws 58, which have screw-threaded engagement with suitable tapped orifices in the pole piece 52. The pole piece 52 at its free end has a tongue portion 60 which extends through a suitable orifice 61 in the angle portion of the armature 53. The armature 53 is thus pivotally supported upon the forward end of the pole piece 52, the edge 62 of the forward end of the pole piece 52 forming a pivot about which the said armature 53 rocks. The armature 53 is secured upon the edge 62 against displacement by means of a leaf spring 63 which has one end fas-

tened to the pole piece 52 by means of screws 64 and its free end provided with an orifice of a size to receive a pin 66 secured to the armature 53. The spring 63 also acts as a tension spring to hold the armature in its normal position. The armature 53 carries a driving pawl 54, which is provided with a rectangular orifice 155, of a size to receive the reduced end portion 156 of the vertical leg 53' of the armature 53. The pawl 54 is provided with a nose 157 angularly disposed in relation with the body portion of the pawl 54 by means of a shearing operation, the said nose 157 being normally in engagement with a tooth 158, of which there are a plurality cut in the circumferential face of the sector 30. The nose 157 of the pawl 54 is held in engagement with a tooth 158, by means of a coil spring 159 which has one end fastened to the tail of the pawl 54 and its other end secured to a hook 161 integrally formed with the armature 53. As the armature 53 vibrates, the nose 157 of the pawl 54 engages successive teeth 158 of the sector, stepping the wipers 9, 10, 11 and 12 from one contact set 5, 6, 7 and 8 to the next on each back stroke of the armature. A stop 165 secured to the mounting plate 2 has a portion 67, against which the sector arm 30' rests when in its normal position, the said angular portion 67 serving as a stop when the wipers W are released to normal, and also to limit the farthest forward movement of the wipers W in that the sector arm 30' engages the said angular portion 67 when the wipers W are in their farthest advanced position. A pair of interrupter springs 68 and 69 are insulatingly secured to the heel iron 52 associated with the motor magnet M M for the usual purpose.

A release magnet R M to restore the wipers 9, 10, 11 and 12 is provided and comprises a heel iron 71, armature 72 and electromagnet 73. In general construction and mounting arrangement, it is quite similar to magnet M M.

A retaining pawl 85 is provided and is pivotally supported upon a post 86 and is rotatably held in place upon the post by means of a cotter pin. The post 86 is secured to an adjustable plate 88 in any suitable manner, as by means of a riveting operation, and the plate 88 is in turn secured to the mounting plate 2 by means of screws 89. A coil spring 90, placed around the post 86, has one end secured to the plate 88 and its other end engaging the pawl that the retaining pawl 85 is forced into 85, and the tension of the spring is such engagement with the teeth 158 of the sector 30. When the wipers W are stepped from one contact set to the next, the retaining pawl 85 retains the said wipers in engagement with a set of contacts as selected by the switch. The pawl 85 is provided with an extended portion 85', which lies in the path of the armature 72 of the release magnet R M. To release the switch and permit the wipers W to move back to normal, the release magnet R M is energized, and the end of the armature 72 in its movement engages the extension 85' of the pawl 85 and rotates the pawl 85 about its pivot, causing the nose of the said pawl 85 to disengage the tooth 158 on the sector 30, and said pawl also causes driving pawl 157 to disengage sector 30 in an obvious manner so that the motor spring 29 now restores the wipers W back to normal or starting position when the arm 30' of the sector 30 again engages the stop 67.

A set of off-normal spring contacts O N are insulatingly mounted upon a bracket 92 by means of the screws 93, and the said bracket 92 is in turn secured to the mounting plate 2 by means of the screws 94. A buffer 95 of suitable insulation material and integrally formed with a spacer strip engages a spring of the contact set O N when the wipers W are in their normal position to hold the contacts at normal. Upon the first step of the wipers W, the buffer 95 disengages and allows the contacts O N to assume their alternate positions.

The mounting plate 2 is detachably secured to the mounting plate 3. The mounting plate 3 is provided with a pair of lugs 96 integrally formed with the said plate 3 by means of a shearing operation, and the mounting plate 2 is provided with a pair of longitudinal slots 97 which cooperate with the lugs 96 for purposes as will be presently described. Screws 98, having screw-threaded engagement with suitably tapped orifices in the auxiliary mounting plate 3, extend up through the slots 97 in the mounting plate 2 when the said plate 2 is in the position as illustrated in Fig. 1. A pair of nuts 99 which have screw-threaded engagement with the screws 98 hold the mounting plate 2 in position upon the auxiliary mounting plate 3. With this arrangement, should any of the magnets or moving parts of the switch need adjustment or repair, the plate 2 may be quickly removed. To do so the nuts 99 are removed and the plate 2 may now be moved downward with reference to Fig. 1, until the wipers W are free of the contact bank B, and when in this position the mounting plate 2 and its parts as a whole may be lifted off. A substitute plate is placed upon the auxiliary plate 3 with the lugs 96 resting in the slots 97, and the screws 98 extend up through the said slots 97. When in this position the plate 2 may be moved upward and the slots 97 form guiding means and the lugs 96 serve as stops. When the plate 2 is in the position as illustrated in Fig. 1, the nuts 99 are again

placed on the screws 98 and tightened. An enlarged circular orifice 100, intermediate of the ends of each of the slots 97, is adapted to receive the cylindrical reduced portion 101 of the nuts 99 when the said nuts 99 are in clamping position. These circular orifices 100 in the slots 97 in relation with the cylindrical portions 101 of the nuts 99 prevent longitudinal and side movement of the mounting plate 2. The contact bank B, as a whole, may also be removed by removing the nuts 23, as is readily apparent from the previous description in connection with the accompanying drawings.

A set of connecting jacks T is rigidly secured to the auxiliary mounting plate 3, each one of said terminals comprising two similarly shaped spring members 102, having their contacting ends flared outward to receive the spring jacks 103 mounted upon the mounting plate 2. The connecting jacks T are set in slots in a block 104 of insulating material and to clamp the said connecting jacks T in place, an insulating strip and a clamping plate 106 are provided, which are adapted to be clamped to the plate 3 by means of the clamping screws 107, which screws have screw-threaded engagement with suitable tapped orifices in the auxiliary mounting plate 3. A set of terminals or spring jacks 103 are provided for cooperation with the connecting jacks T, the spring jacks 103 being securely held by means of a slotted insulation block, and are clamped to the mounting plate 2 in a manner similar to that illustrated and described in connection with the connecting jacks T. The spring jacks 103, as before mentioned, cooperate with the connecting jacks T, whereby each of the spring jacks 103 is inserted between a pair of connecting jacks 102 to form a connection. Connecting wires which lead into the switch are connected to the connecting jacks 102, and the connecting wires that connect to the operating mechanism of the switch are connected to the spring jacks 103, thereby allowing the operating mechanism to be readily removed without the necessity of unsoldering any of the connecting wires, as all the incoming and outgoing wires to parts carried by the plate 2 are carried through the connecting jacks 102 and spring jacks 103.

While I have illustrated and described a specific form of the invention, I do not wish to be limited to the same, as changes and modifications will readily suggest themselves to those skilled in the art, and the mechanism is obviously usable in a large variety of relations, but

What I do claim is:

1. A single level selector, including a contact bank and supporting means therefor, a mounting plate supporting the moving parts of the selector, said mounting plate removably attached to said means, automatic guide means including lugs integrally formed on said supporting means, slots formed in said mounting plate, removable members for insuring the exact lateral and longitudinal adjustment when a new mounting plate is substituted for said first mentioned plate, contact wipers rotatably supported on said mounting plate and in operative position so that said wipers will engage the contacts in said contact bank, driving means including a ratchet and pawl mechanism for driving said contact wipers from one set of bank contacts to another set, means for operating said driving pawl, a retaining pawl for engaging the ratchet of said driving means to retain the wipers in their advanced position and also adapted to disengage said ratchet and to engage said driving pawl to permit said wipers to restore to normal by spring tension, and means for operating said retaining pawl.

2. A single level selector mechanism including a supporting frame, a rotary driven shaft and associated wiper mechanism at a central point, a driving magnet at one side of the shaft, a release magnet at the other side, the working mechanism of each of said magnets being toward said shaft, off-normal springs carried by said frame, their working ends toward said shaft, and driving and release mechanism for said magnets respectively to actuate the wipers and off-normal contacts, said off normal contacts actuated and controlled by said wipers, and said driving mechanism engaged by said release mechanism to release and permit said wipers to restore to normal by spring tension.

3. Selector mechanism having wipers of spring material so that they require support at a point intermediate of their length, a rotary ratchet and wiper-carrying hub on said shaft, the ratchet element extending outwardly to said intermediate point of said wipers and mechanical connections whereby said wipers are insulatingly supported by said element at their said intermediate point.

4. A selector switch including an arcuate contact bank and a supporting member for the same, a set of spring contact wipers movable in a single plane to engage the contacts of said contact bank, a motor magnet for causing said contact wipers to engage contacts in said contact bank, a release magnet for restoring said contact wipers to normal and to disassociate said motor magnet from said contact wipers, a mounting member for said contact wipers, motor magnet and release magnet, said mounting plate provided with slots for receiving lugs formed integrally on said supporting member, means for engaging said supporting member and said mounting member, said

lugs and said last means serving to adjustably secure said supporting member to said mounting member and said contact bank in position relative to said contact wipers.

5. A selector switch movable in a single plane including a contact bank, sets of contact wipers for engaging sets of contacts in said contact bank, means for causing said contact wipers to engage contacts in said contact bank, releasing means for restoring said contact wipers to normal, a supporting member for said contact bank, a mounting plate for said contact wipers, said first means and said releasing means, said mounting plate provided with slots for receiving lugs integrally formed on said supporting member, other members for engaging said supporting member and said slots to adjustably secure said supporting member to said mounting plate so that the contact wipers are operatively positioned relative to said contact bank.

6. In a selector switch movable in a single plane including a contact bank and a supporting member for the same, a set of spring contact wipers adapted to be rotated in a single plane, a driving magnet for rotating said wipers, a member for determining the distance said wipers may be rotated, a releasing magnet for disassociating said driving magnet and said wipers to permit the restoration of said wipers to normal, a mounting member for said wipers, driving magnet and releasing magnet, said mounting member provided with slots for permitting said supporting member to be adjustably secured thereto by means of screw members extending through said supporting member and said slots and by means of integrally formed members on said supporting member engaging said slots.

7. In a single level selector having a set of contact wipers secured to a ratchet and to a rotatable hub member supported by a shaft, a mounting plate for said shaft and hub member, a contact bank and a supporting member, means integrally formed on said supporting member to engage openings in said mounting plate to adjustably secure said mounting plate and said supporting member together, driving means including a ratchet and a driving pawl for advancing said wipers, a retaining pawl for engaging said ratchet and adapted to disengage said ratchet and to engage said driving pawl to release and permit said wipers to restore to normal by spring tension, and means for operating said retaining pawl.

Signed by me at Chicago, in the county of Cook and State of Illinois, this 7th day of July, 1920.

WILLIAM KAISLING.