United States Patent

Alexeff et al.

[15] **3,650,000**

[45] **Mar. 21, 1972**

[54] WEB GUIDING AND EXPANDING APPARATUS

[72] Inventors: **Alexander V. Alexeff,** Cleveland; **Harvey Snyder,** Bay Village, both of Ohio

[73] Assignee: **Alexeff-Snyder Enterprises, Inc.,** Cleveland, Ohio

[22] Filed: **Apr. 6, 1970**

[21] Appl. No.: **31,047**

[52] **U.S. Cl.** **26/65**

[51] **Int. Cl.** **D06c 3/06**

[58] **Field of Search** 26/61, 65–67

[56] **References Cited**

UNITED STATES PATENTS

1,385,746	7/1921	Hogan	26/65
2,348,162	5/1944	Warner	26/65 X
2,835,490	5/1958	Dungler	26/67 X
3,156,396	11/1964	Snyder et al.	26/65 X
3,509,607	5/1970	Fleissner	26/65 X

Primary Examiner—Louis K. Rimrodt

Attorney—Oberlin, Maky, Donnelly & Renner

[57] **ABSTRACT**

Web guiding and expanding apparatus including a single expander roll adjacent each edge of the web material having one end desirably carried by a pivotal link for raising and lowering of the expander rolls into and out of engagement with such web material. The other end of each expander roll may either be free to move or may be relatively fixed except for annular movement. One end of such expander rolls may also be mounted for lateral movement relative to the other end to permit adjustment of the angle of cant of the rolls, or the entire frame which supports the rolls may be mounted for pivotal movement about an axis perpendicular to the normal path of travel of the web material to permit such adjustment.

20 Claims, 14 Drawing Figures

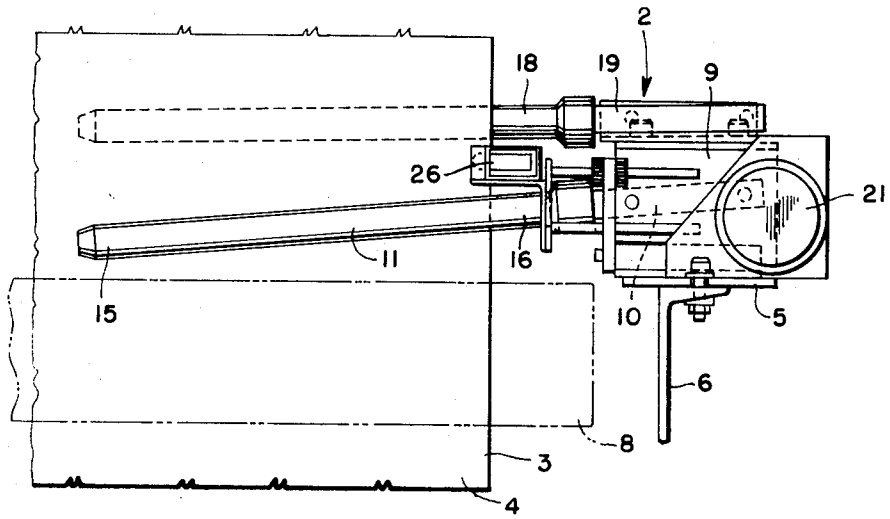

PATENTED MAR 21 1972 3,650,000

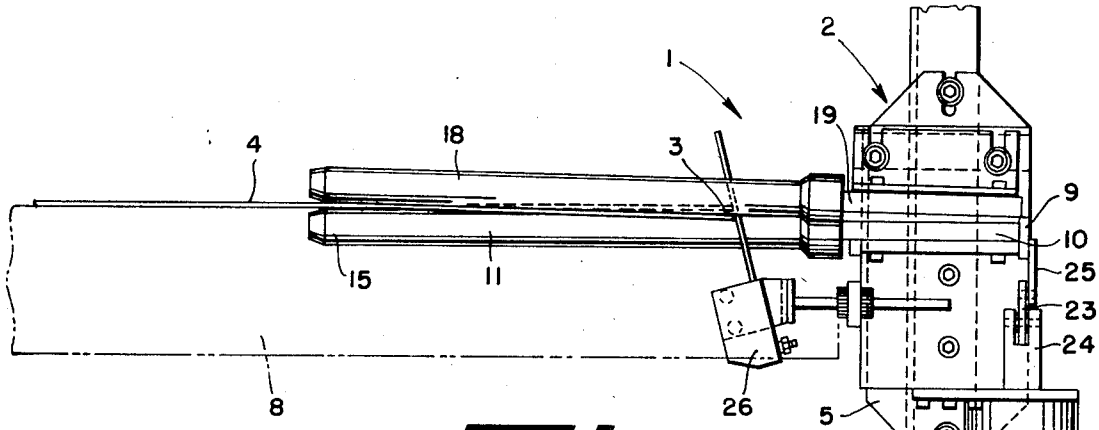

Fig. 2

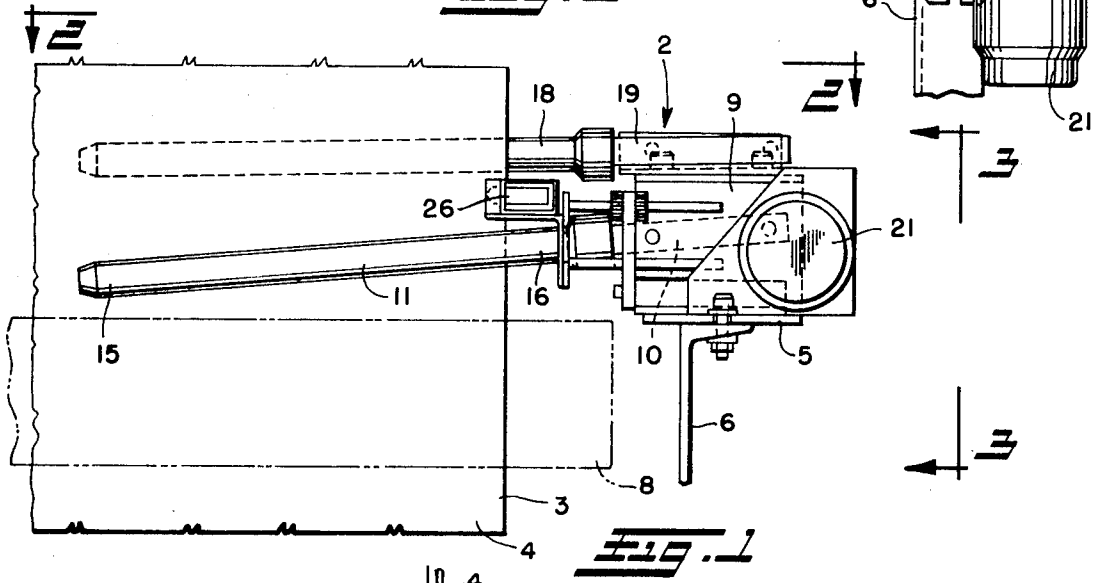

Fig. 1

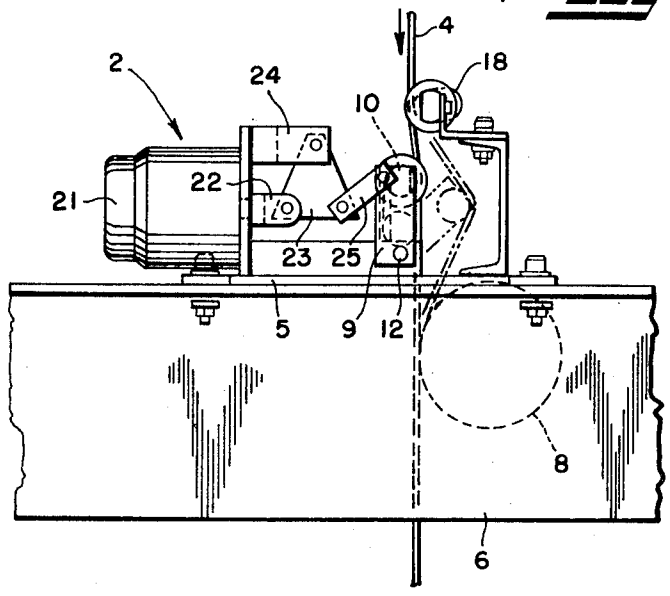

Fig. 3

INVENTORS.
ALEXANDER V. ALEXEFF
HARVEY SNYDER

Oberlin, Maky, Donnelly & Renner
ATTORNEYS

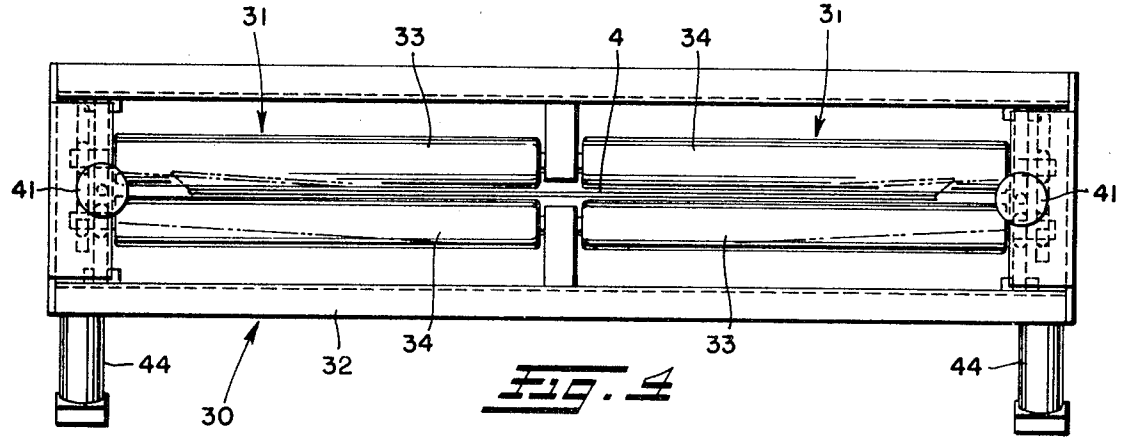

FIG. 4

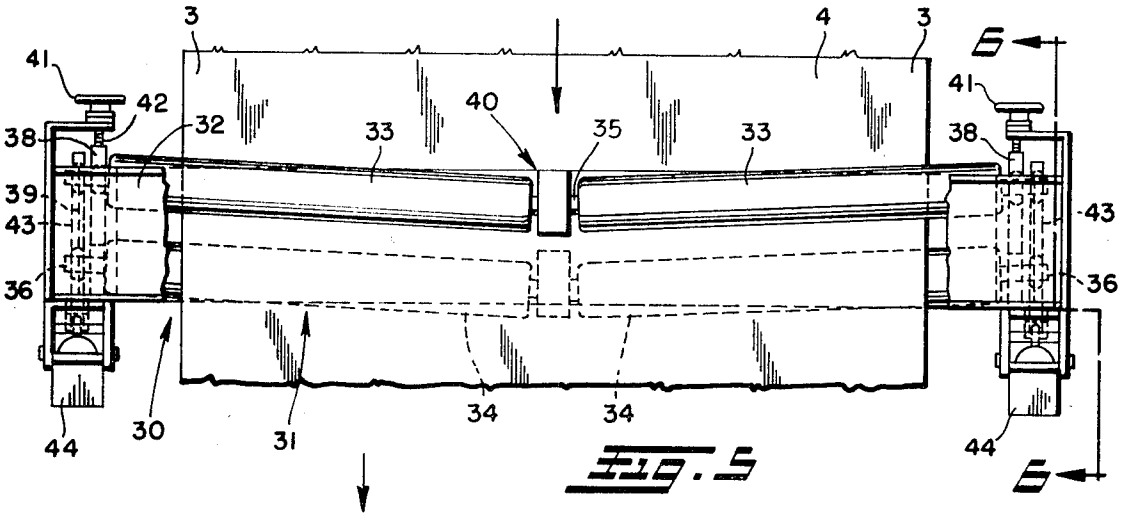

FIG. 5

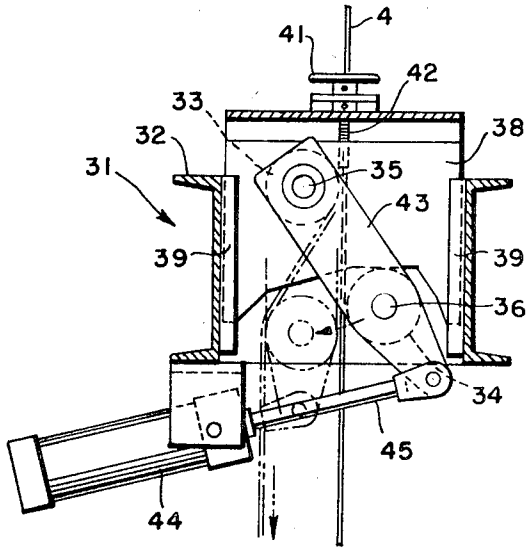

FIG. 6

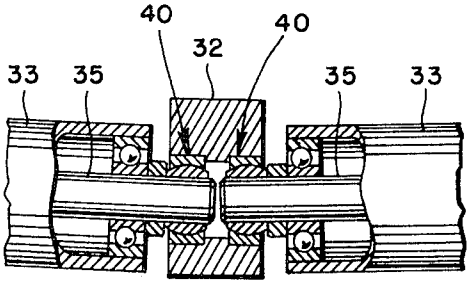

FIG. 7

INVENTORS
ALEXANDER V. ALEXEFF
HARVEY SNYDER

Oberlin, Maky, Donnelly & Renner
ATTORNEYS

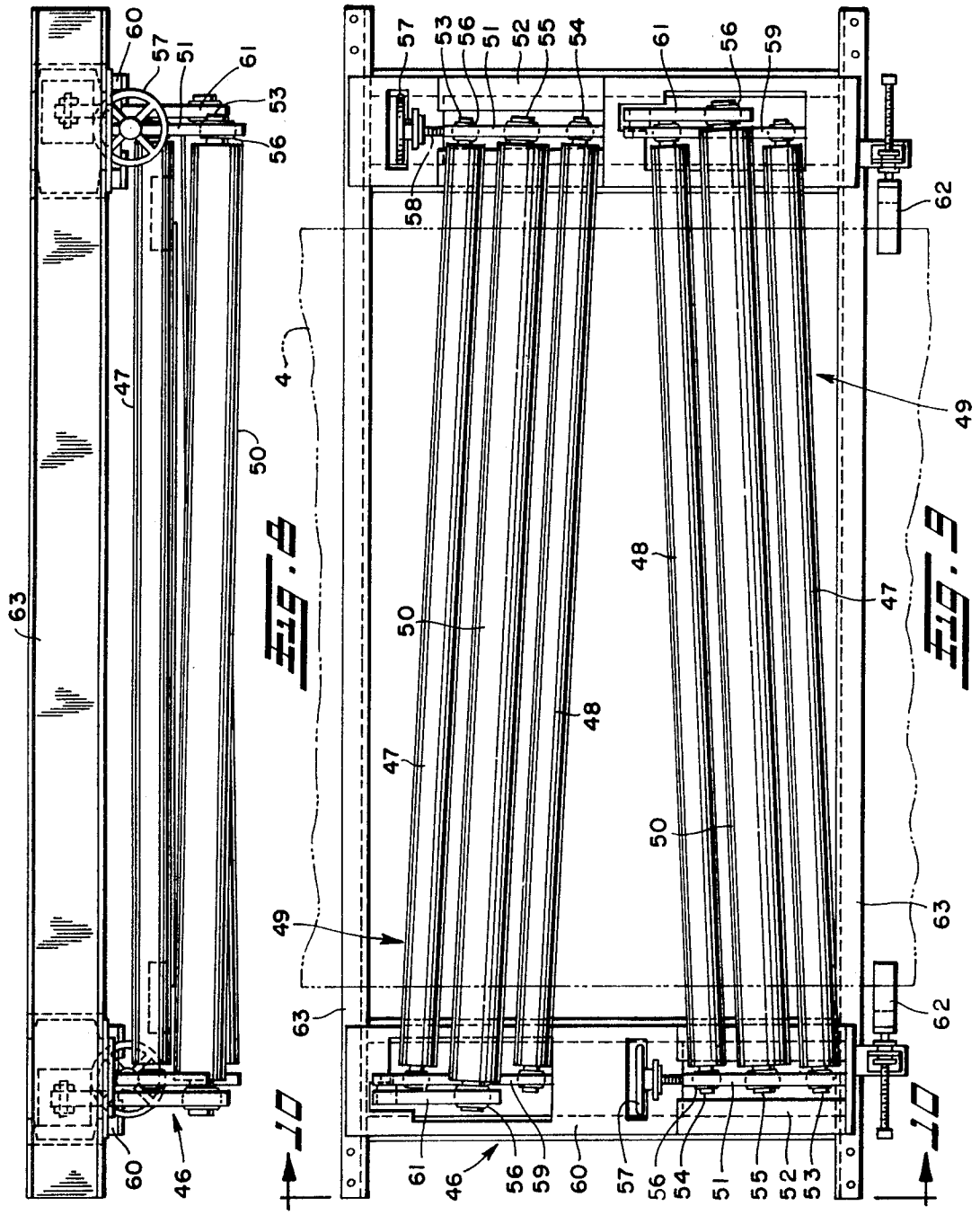

FIG. 8

FIG. 9

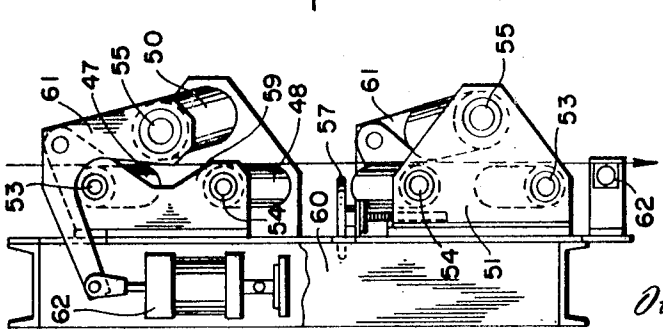

FIG. 10

INVENTORS.
ALEXANDER V. ALEXEFF
HARVEY SNYDER

Oberlin, Maky, Donnelly & Renner
ATTORNEYS

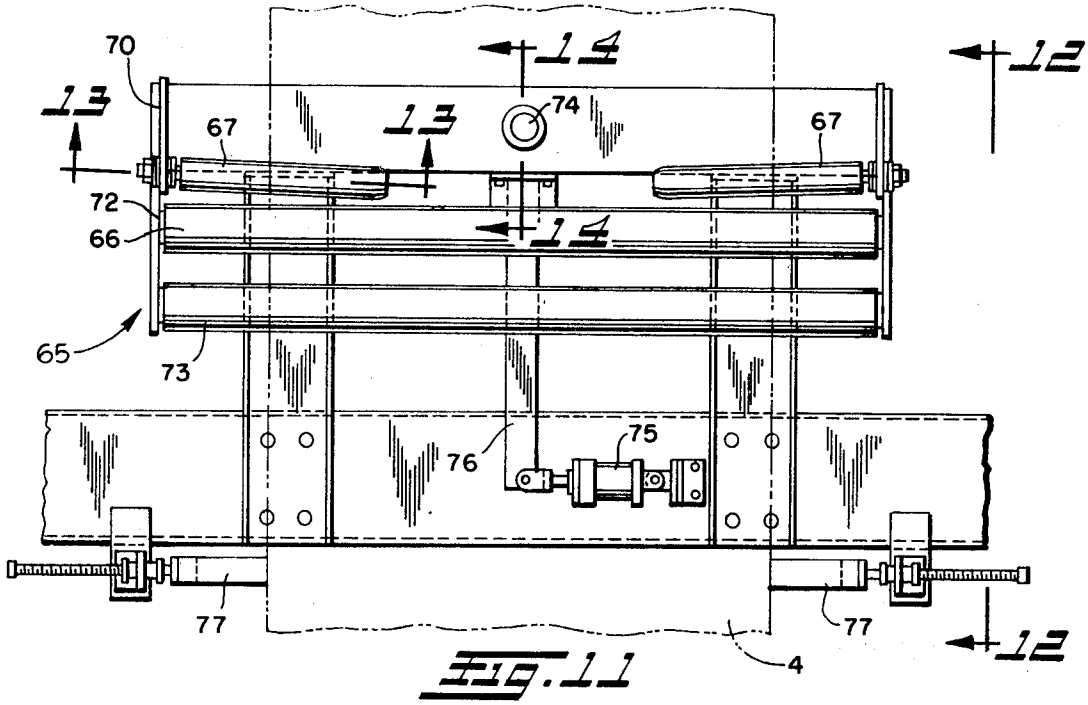

FIG. 11

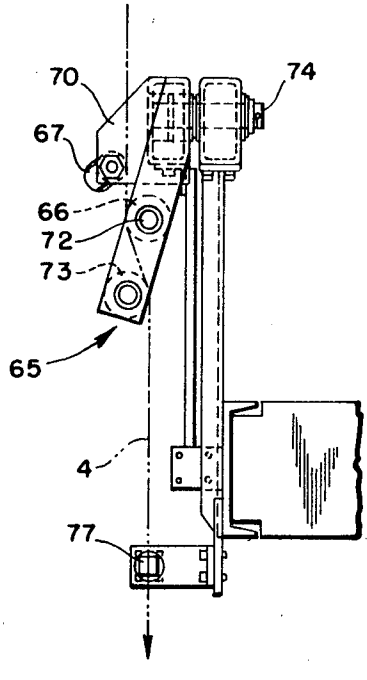

FIG. 12

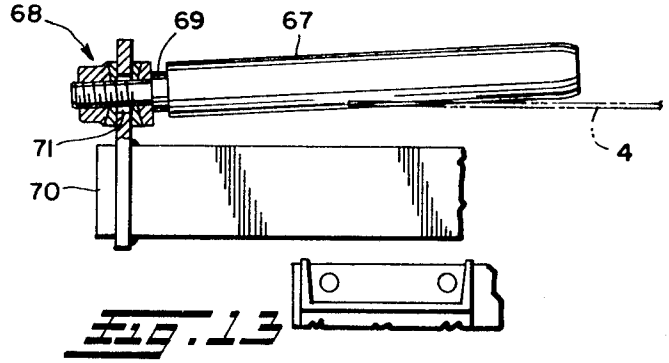

FIG. 13

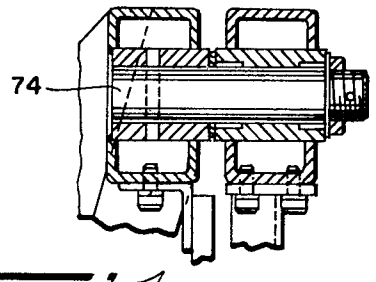

FIG. 14

INVENTORS.
ALEXANDER V. ALEXEFF
HARVEY SNYDER

Oberlin, Maky, Donnelly & Renner
ATTORNEYS

WEB GUIDING AND EXPANDING APPARATUS

BACKGROUND OF THE INVENTION

This invention relates to certain improvements in web guiding and expanding apparatus for maintaining web or strand material on center in a material processing line with some stretching of the material edges as may be required using a single expander roll adjacent each edge of the web material.

Single expander rolls have of course previously been used for controlling and guiding web material such as tire fabric material during movement through a processing line. Reference may be had, for example, to U.S. Pat. No. 3,414,954, granted Dec. 10, 1968, which discloses a single expander roll adjacent each edge of the web material and is angularly adjustable for increasing and decreasing the angle of wrap of the web material against the rolls as necessitated by the amount of lateral movement required of the web material. In such patent, angular adjustment is desirably accomplished by mounting each expander roll so that the innermost end of the roll which is nearest the center line of the web material remains substantially stationary during vertical movement of the outer end toward and away from the adjacent web edge. This has the advantage that engagement of the roll with the web material will always be greatest at the edge where stretching and guiding is needed most and will progressively diminish in the direction of the web centerline. The present invention relates to various other apparatus by which movements of the expander rolls may be controlled for obtaining the necessary guiding and expanding of the web material.

SUMMARY OF THE INVENTION

As will be more fully described hereafter, one end of the expander rolls for the apparatus of the subject invention is desirably carried by a pivotal link for raising and lowering of the rolls into and out of engagement with the web material, and the other end of such expander rolls may either be free to move or relatively fixed except for angular movement. One end of the rolls may also be laterally movable relative to the other end for adjustment of the angle of cant of the rolls.

In another form of the invention, the entire frame which supports the rolls may be mounted for pivotal movement about an axis perpendicular to the normal path of travel of the web material to permit adjustment of the angle of cant of the rolls, and the vertical position of the rolls on the frame may also be adjusted with respect to the web material to vary the bite of the rolls into the web material.

To the accomplishment of the foregoing and related ends, the invention, then, comprises the features hereinafter fully described and particularly pointed out in the claims, the following description and the annexed drawings setting forth in detail certain illustrative embodiments of the invention, these being indicative, however, of but a few of the various ways in which the principle of the invention may be employed.

BRIEF DESCRIPTION OF THE DRAWINGS

In the annexed drawings:

FIG. 1 is a top plan view of a preferred form of web guiding and expanding apparatus constructed in accordance with this invention;

FIG. 2 is an end elevation view of the apparatus of FIG. 1 looking in the direction of movement of the web travel, as seen from the plane of the line 2—2;

FIG. 3 is a side elevation view of the apparatus of FIG. 1, as seen from the plane of the line 3—3 at the right side of the web material;

FIG. 4 is an end elevation view of a modified form of web guiding and expanding apparatus constructed in accordance with this invention;

FIG. 5 is a top plan view of the apparatus of FIG. 4, with portions of the frame for the rolls broken away;

FIG. 6 is a fragmentary transverse section through one of the support stands for the apparatus of FIG. 5, taken on the plane of the line 6—6 thereof;

FIG. 7 is an enlarged fragmentary longitudinal section through the bearing mounts for the inner ends of the rolls of FIGS. 4 and 5;

FIG. 8 is an end elevation view of still another form of web guiding and expanding apparatus in accordance with this invention;

FIG. 9 is a plan view of the apparatus of FIG. 8;

FIG. 10 is a side elevation view of the apparatus of FIG. 9 as seen from the plane of the line 10—10 at the left side of the web material;

FIG. 11 is a top plan view of yet another form of web guiding and expanding apparatus in accordance with this invention;

FIG. 12 is a side elevation view of the apparatus of FIG. 11 as seen from the plane of the line 12—12 at the right side of the web material;

FIG. 13 is a fragmentary longitudinal section through the mount for one of the expander rolls of FIG. 11, taken on the plane of the line 13—13, and

FIG. 14 is an enlarged vertical section through the pivotal mount for the main frame of the apparatus of FIG. 11, taken on the plane of the line 14—14.

DESCRIPTION OF THE PREFERRED EMBODIMENTS

Referring now in detail to the drawings and first to FIGS. 1 through 3, there is shown one form of web guiding and expanding apparatus 1 in accordance with this invention including a roll assembly 2 desirably disposed adjacent each edge 3 of the web material 4, only one of such roll assemblies 2 being illustrated since the other may be of identical construction. The base 5 of each roll assembly 2 may be bolted or otherwise fastened to a suitable support member 6 such as a channel member anywhere along its length for proper positioning of the roll assembly 2 within a material processing line. Preferably, each roll assembly 2 is located slightly upstream from a stationary guide roll 8 in the material processing line for cooperation therewith, in a manner to be subsequently fully explained.

Pivoted to the base 5 of the roll assembly 2 is a support 9 for one end of a shaft 10 on which is journaled an expander roll 11. The pivotal axis 12 for the support 9 is disposed in a plane generally parallel to the plane of the web material and extends transverse to the web material, whereas the shaft 10 for the expander roll 11 is disposed at a slight angle with respect to the plane of the web material such that the innermost end 15 of the expander roll 11 is further away from the plane of the web material than the outermost end 16 thereof, whereby when the support 9 is pivoted to move the expander roll 11 into engagement with the web material, such engagement is greatest at the fabric edge 3 where stretching is needed most and progressively diminishes in the direction of the web centerline.

The shaft 10 is also canted slightly in the direction of web flow as shown in FIG. 1, which is necessary to cause the web material to move outwardly when the expander roll is moved into engagement therewith as just described. The cant angle determines the maximum extent to which the material can travel outwardly, and the amount of bite of the expander roll into the web material controls the amount of friction forces needed to keep the fabric edge at any desired position along the expander roll. If the web material is maintained sufficiently taut, no additional rolls are required to obtain the necessary wrap of the web material around the expander roll for controlling edge position. However, as a practical matter, one or two stationary rolls are generally placed closely adjacent the expander roll 11 to provide support for the web material when contacted by the expander roll. One of such rolls may be the stationary guide roll 8 previously described, and its position adjacent the expander roll may be controlled through proper positioning of the roll assembly 2 along the channel member 6. A second stationary roll 18 is desirably mounted on a shaft 19 fixed to the base 5 of the roll assembly 2 on the side of the expander roll 11 opposite the stationary

roll 8 so that the expander roll 11 may move between such stationary rolls.

Such movements of the expander roll 11 may be controlled by a diaphragm type air cylinder or other actuator 21 mounted on the roll assembly base 5 and having its rod 22 connected to the pivotal support 9 through a first link 23 pivotally suspended from a stationary bracket 24 and a second link 25 having opposite ends connected to the first link and pivotal support, respectively. Actuation of the cylinder 21 may be controlled by an edge sensor 26 supported by the roll assembly base 5 for engagement with the adjacent edge of the web material. Preferably, such edge sensor 26 is of the pneumatic contact type, but it will be apparent that other types of sensors may be used equally well.

In the FIGS. 1 through 3 embodiment, the stationary rolls 8 and 18 are shown with their axes extending substantially perpendicular to the passline of the web material, whereby only the cant of the expander roll 11 provides a limited amount of expanding force to the web material edges when the expander roll is moved into engagement therewith. However, it will be apparent that the stationary rolls may also be canted to increase the amount of expanding force as desired.

Referring next to FIGS. 4 through 7, there is shown a modified form of web guiding and expanding apparatus 30 which includes two roll assemblies 31 as before, one for controlling the lateral position of each of the edges of the web material. However, instead of providing separate frames for each of the roll assemblies, a single frame 32 extending beyond the full width of the web material 4 is desirably provided for both roll assemblies.

Each roll assembly 31 may consist of a relatively fixed guide roll 33 and a movable expander roll 34 movable into and out of engagement with the web material for increasing and decreasing the angle of wrap of the web material around the rolls passing therebetween. The relatively fixed guide roll 33 is desirably canted similar to the movable expander roll 34 of each roll assembly 31 to increase the expanding force exerted on the edges of the web material by the rolls for any given amount of wrap of the web material therearound.

Adjustment of the cant angle of the relatively fixed guide rolls 33 may be accomplished by suspending one end of their respective shafts 35 from the center of the frame 32 and mounting the other end of such shafts to laterally slidable plates 38 received in stationary guides 39 adjacent opposite sides of the web material for permitting limited lateral movement of the outer end of the guide rolls 33 relative to the inner ends thereof. Suitable spherical bearings 40 may be provided for the ends of the shafts 35, shown in detail in FIG. 7, to permit angular movement of the shafts 35 during such adjustment of the cant angle. A handwheel 41 may also be provided on the stationary frame 32 for turning of a screw shaft 42 having threaded engagement with the plates 38 to obtain manual adjustment of the cant angle of such guide rolls 33.

The inner ends of the shafts 36 for the expander rolls 34 may also be suspended from the center of the frame 32 by spherical bearings 40 to permit angular adjustment of the cant angle of the expander rolls during lateral movement of the outer ends of the shafts with the movable plates 38. However, the outer ends of the expander roll shafts 36 are not directly mounted on the plates 38 as are the outer ends of the guide roll shafts 35. Instead, a pivotally mounted link 43 is provided on each of the laterally slidable plates 38, and the outer ends of the expander roll shafts 36 are connected to such links using suitable spherical bearings 40 to permit adjustment of the angle of bite of the expander rolls 34 with respect to the edges of the web material. Fluid cylinders 44, pivotally mounted to the main frame 32 at each end may have their rods 45 connected to the pivotally mounted links 43 for effecting the desired movements of the expander rolls. During such movements of the outer ends of the expander roll shafts 36 toward and away from the web material, the inner ends of such shafts 36 remain relatively fixed except for angular adjustment permitted by the spherical bearings 40, whereby engagement of the expander rolls 34 with the web material is always greatest at the edge thereof and progressively diminishes in the direction of the web centerline. Edge sensors, not shown, may be used to control the operation of the fluid cylinders 44 in known manner for increasing and decreasing the bite angle as required to control edge position of the web material during longitudinal movement.

In FIGS. 8 through 10 there is shown a modified form of web guiding and expanding apparatus 46 which is generally similar to the apparatus of the FIGS. 4 through 7 embodiment except that two relatively fixed guide rolls 47, 48 are provided for each roll assembly 49 instead of one. The expander roll 50 of each roll assembly 49 is interposed between such relatively fixed guide rolls 47, 48 and one end of the expander roll 50 is movable toward and away from the web material for increasing and decreasing the bite angle of the rolls with the respective edges of the web material passing between the guide rolls 47, 48 and expander roll 50. Each of the rolls 47, 48 and 50 desirably extend all the way across the web material rather than only approximately half way across as in the FIGS. 4 through 7 embodiment for convenience in mounting the ends of the roll shafts. However, of course the rolls of each assembly only engage one edge of the web material, and all of the rolls of each roll assembly are desirably canted for controlling edge position of both edges of the web material.

Adjustment of the cant angle of the rolls 47, 48 and 50 of each roll assembly 49 may be obtained by providing slidable plates 51 for the roll shafts received in guides 52 adjacent opposite edges of the web material. One end of the roll shafts 53, 54 and 55 of each roll assembly 49 is journaled in one of the plates 51 using suitable spherical bearings 56 which permit angular adjustment of the shafts during lateral movement of one end of the shafts relative to the other. Handwheels 57 may be provided for turning screw shafts 58 having threaded engagement with the respective slidable plates 51 to obtain manual adjustment of the cant angle of the rolls.

The other ends of the guide roll shafts 53, 54 are relatively fixed except for angular movement permitted by spherical bearings 56 which connect such other ends to mounting plates 59 on the roll assembly housings 60. However, the other ends of the expander roll shafts 55 are supported by pivotally mounted links 61 using suitable spherical bearings 56 to facilitate raising and lowering of the corresponding ends of the expander rolls away and toward the respective edges of the web material for decreasing and increasing the angle of bite of the expander rolls with the respective edges of the web material. Fluid cylinders 62 (see FIG. 10) suitably connected to the respective links 61 for the expander roll shafts 55 control the position thereof in response to signals from edge sensors 62 adjacent opposite edges of the web material, as well known in the art. Variations in edge position of the roll assemblies 49 may be obtained by movement of the roll assemblies along overhead beams 63 extending transversely across the web processing line.

In FIGS. 11 through 14, there is shown still another form of web guiding and expanding apparatus 65 in accordance with this invention including a first guide roll 66 extending transversely across the entire width of the web material 4 substantially perpendicular to the edges thereof for engagement by one side of the web material, and a single expander roll 67 adjacent each edge of the web material for engagement with the opposite side of such web material closely adjacent the downstream side of the guide roll 66. Preferably, both the angle of cant and angle of bite of the expander rolls 67 are fixed to suit using a spherical nut and washer assembly 68 for mounting the outer ends of the expander roll shafts 69 to the main frame 70 of the apparatus 65. A slotted hole 71 may be provided in the main frame 70 for each of the expander roll shafts 69 to permit limited adjustment of the bite of the expander rolls 67 as shown in FIG. 13.

The ends of the guide roll shaft 72 are also desirably fixed to the main frame 70 of the apparatus with no provision being made for separate adjustment of its cant angle. A second guide

roll 73 substantially identical to the first guide roll 66 may also be mounted on the main frame 70 of the apparatus adjacent the upstream side of such first guide roll for increasing the angle of wrap of the web material passing between the guide rolls 66, 73 as clearly shown in FIG. 12.

Although in operation the positions of the expander rolls 67 and guide rolls 66, 73 are maintained relatively fixed with respect to the main frame 70 of the apparatus, the main frame may have a center pivot 74 perpendicular to the general plane of the web material and in line with the centerline of the web material to permit pivotal movement of the main frame and expander rolls and guide rolls carried thereby through actuation of a fluid cylinder 75 suitably connected to the main frame 70 as by means of a linkage mechanism 76.

Actuation of the fluid cylinder 75 may be controlled by a pair of edge sensors 77 adjacent opposite edges of the web material, as well known in the art. If the web material is overguided and overexpanded on one side, the edge sensor 77 will cause the fluid cylinder 75 to pivot the main frame 70 in a direction canting the guide rolls 66, 73 slightly toward the opposite side to move the fabric back to a centerline position. At the same time, the cant angle of the expander roll 67 adjacent such one edge of the web material will decrease slightly to reduce the expansion of the web material adjacent such one edge, and the cant angle of the expander roll 67 adjacent the other edge of the web material will increase slightly for increased expansion adjacent the other edge, and so on.

From the foregoing, it will now be apparent that the various forms of web guiding and expanding apparatus disclosed herein will maintain the web material on center during longitudinal movement through a processing line while providing for some expansion at the edges of the web material as desired. The cant angle of one or more rolls of each roll assembly may be varied as desired to vary the maximum permissible expansion of the web material adjacent its edges, and the bite angle or angle of wrap of the web material around the rolls may also be varied by raising and lowering the expander rolls away and toward the web material for maintaining fabric edge position.

We, therefore, particularly point out and distinctly claim as our invention:

1. Web guiding and expanding apparatus comprising a pair of roll assemblies for controlling the edge position of a web material passing between said roll assemblies, wherein one of said roll assemblies comprises a first roll supported by a shaft, a pivotal support for one end of said shaft permitting movement of said first roll toward and away from the plane of the web material for increasing and decreasing the angle of bite of the first roll with the web material adjacent one edge thereof, a relatively fixed support for the other end of said shaft, and spherical bearing mounts for the ends of said shaft permitting angular movement of said shaft relative to said pivotal support and fixed support during movement of said pivotal support and said one end of said shaft carried thereby.

2. The apparatus of claim 1 further comprising means for adjusting the cant angle of said first roll, comprising a laterally movable plate, guide means for guiding the movement of said plate, and means mounting said pivotal support on said plate for movement therewith.

3. The apparatus of claim 2 further comprising rotatable screw means for adjusting the position of said movable plate.

4. The apparatus of claim 1 wherein said pivotal support is located adjacent one edge of the web material, said fixed support is located intermediate the width of the web material, and the length of said first roll and shaft therefor are such as to be accommodated between said supports.

5. The apparatus of claim 4 wherein the other roll assembly comprises a second roll supported by a shaft, a pivotal support for one end of the shaft for said second roll located adjacent the opposite edge of the web material to permit movement of said second roll toward and away from the plane of the web material for increasing and decreasing the angle of bite of the second roll with the web material adjacent the opposite edge thereof, and fixed common support means for the other ends of the shafts for said first and second rolls located intermediate the width of the web material, the length of said first and second rolls being approximately equal to one-half the width of the web material.

6. The apparatus of claim 5 further comprising a common frame for said roll assemblies extending across the full width of the web material, said fixed common support means being suspended from said common frame intermediate the ends thereof.

7. The apparatus of claim 1 wherein said pivotal support is located adjacent one edge of the web material, said relatively fixed support is located adjacent the other edge of the web material, and the length of said first roll and shaft therefor are greater than the width of the web material.

8. The apparatus of claim 7 further comprising housings for said pivotal support and relatively fixed support adjacent opposite edges of the web material, and overhead beams extending transversely across the web material, said housings being movable along said overhead beams for adjusting the edge position of said roll assembly with respect to the web material.

9. The apparatus of claim 7 further comprising second and third rolls mounted on shafts on opposite sides of said first roll, one end of said shafts being relatively fixed, and the other end of said shafts being laterally movable to permit adjustment of the cant angle of all of said rolls.

10. The apparatus of claim 1 further comprising means mounting said relatively fixed support for limited lateral movement to adjust the cant angle of said first roll.

11. The apparatus of claim 1 further comprising a second roll supported by another shaft, means mounting one end of said another shaft for lateral movement to adjust the cant angle of said second roll, the other end of said another shaft being relatively fixed except for angular movement.

12. The apparatus of claim 11 wherein said means mounting said one end of said another shaft for lateral movement comprises a laterally movable plate, and guide means for guiding the movement of said plate, said one end of said another shaft being relatively fixed to said laterally movable plate except for angular movement, said pivotal support being mounted on said laterally movable plate for movement therewith for simultaneous adjustment of the cant angle of said first roll and second rolls.

13. Web guiding and expanding apparatus comprising a pair of roll assemblies for controlling the edge position of a web material passing therebetween, one of said roll assemblies comprising a first roll supported by a shaft, and means mounting one end of said shaft for movement toward and away from the plane of the web material adjacent one edge thereof for increasing and decreasing the angle of bite of the first roll with the web material, said last-mentioned means comprising a pivotal support for said one end of said shaft, a first pivotally mounted link, a second link having opposite ends pivotally connected to said first link and to said pivotal support, respectively, and an actuator having a rod pivotally connected to said first link.

14. The apparatus of claim 13 further comprising a support for said one roll assembly extending longitudinally of the web processing line along one edge of the web material, a stationary guide roll in such web processing line, and means for mounting said one roll assembly along the length of said support for proper positioning of said first roll with respect to said stationary guide roll.

15. The apparatus of claim 14 wherein said one roll assembly further comprises another stationary guide roll located on the side of said first roll opposite said first-mentioned stationary guide roll.

16. Web guiding apparatus comprising a pair of spaced apart roll assemblies for controlling the position of a web material passing therebetween, a common support frame for said pair of roll assemblies having a central pivot extending perpendicular to the general plane of the web material and in line with the center of the web processing line, and means for

pivoting said frame in either direction in response to lateral movement of the web material to vary the cant angle of each of said roll assemblies for causing lateral movement of the web material in the reverse direction to maintain the web material on center with respect to the web processing line.

17. The apparatus of claim 16 wherein said pair of roll assemblies each comprise an expander roll canted in the direction of movement of the web material and disposed at an angle for progressively biting into the web material toward the respective edges thereof.

18. The apparatus of claim 17 further comprising a pair of spaced apart slotted holes in said frame, said expander rolls being mounted on shafts extending through said slotted holes, and a spherical nut on the ends of said shafts extending through said slotted holes providing limited adjustment of the bite of said expander rolls.

19. The apparatus of claim 17 wherein said pair of roll assemblies further comprise at least one guide roll extending transversely across the entire width of the web material adjacent the upstream side of said expander rolls and supported by said frame for pivotal movement therewith.

20. The apparatus of claim 19 wherein there is a second guide roll extending transversely across the entire width of the web material adjacent the upstream side of said first mentioned guide roll and supported by said frame for pivotal movement therewith, said second guide roll increasing the angle of wrap of the web material passing between said guide rolls.

* * * * *