2 Sheets—Sheet 1.

L. LILLIE.

TIME-LOCKS.

No. 193,973. Patented Aug. 7, 1877.

Fig. 1

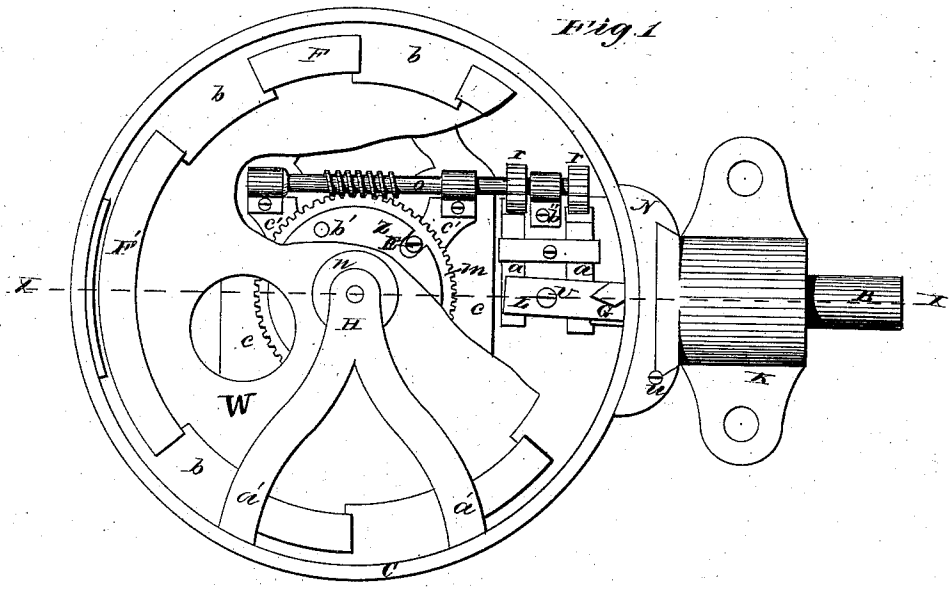

Fig. 2

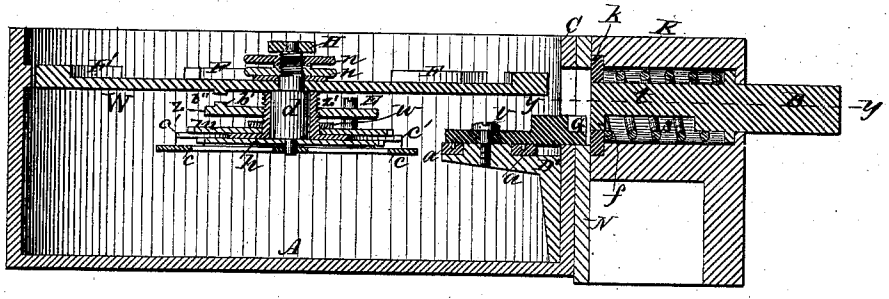

Fig. 3

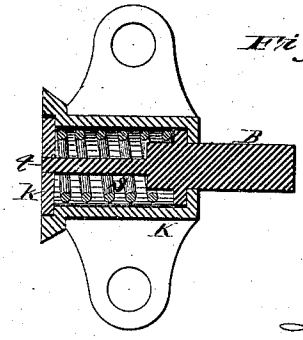

Attest

Jas. M. Seymour

M. A. King

Inventor

Lewis Lillie

N. PETERS, PHOTO-LITHOGRAPHER, WASHINGTON, D. C.

2 Sheets—Sheet 2.

L. LILLIE.

TIME-LOCKS.

No. 193,973. Patented Aug. 7, 1877.

Fig. 4.

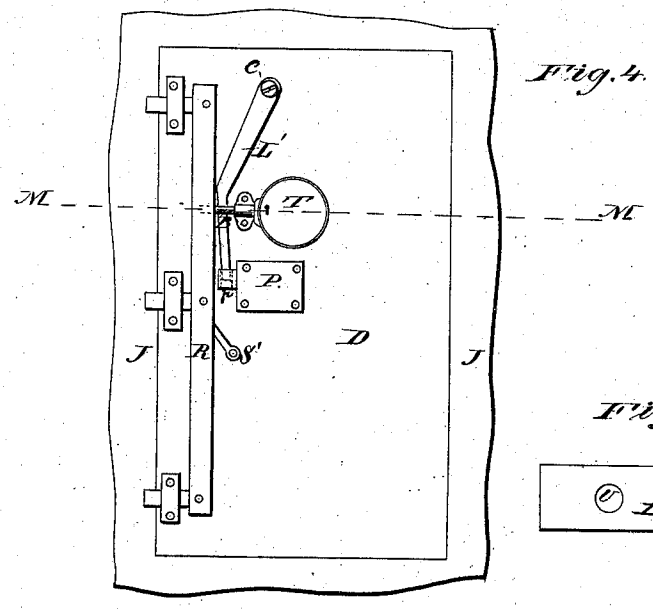

Fig. 5

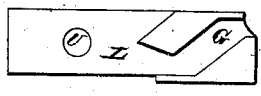

Fig. 8.

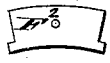

Fig. 6.

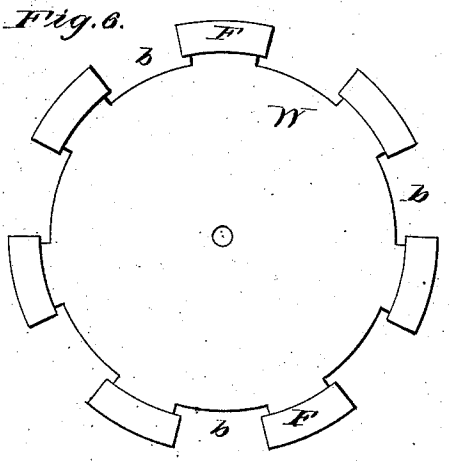

Fig. 7.

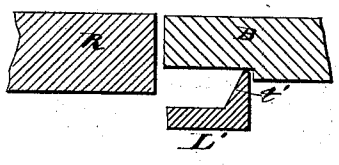

Witnesses
Jos. M. Seymour
M. A. King

Inventor
Lewis Lillie

N. PETERS, PHOTO-LITHOGRAPHER, WASHINGTON, D. C.

UNITED STATES PATENT OFFICE.

LEWIS LILLIE, OF ELIZABETH, NEW JERSEY.

IMPROVEMENT IN TIME-LOCKS.

Specification forming part of Letters Patent No. 193,973, dated August 7, 1877; application filed April 3, 1877.

To all whom it may concern:

Be it known that I, LEWIS LILLIE, of Elizabeth, in the county of Union and State of New Jersey, have invented new and useful Improvements in Time-Locks, which improvements are fully set forth in the following specification, reference being had to the accompanying drawings.

The object of my invention is to construct a time-lock for use on safes, vaults, &c., which will not subject its users to the danger of being locked out by the stoppage of the time-movements. This I accomplish by so constructing the lock, and connecting it with, or bringing it under the influence of, the spindle of the train-bolts, or the spindle of the combination-lock, that by turning the latter back and forth to the right and to the left alternately during a longer or shorter time the time-lock may be unlocked from the outside independently of the time movements, as described below.

In the drawings, Figure 1 is a front view of the lock, with the cover or door removed. Fig. 2 is a sectional view, the section being made through the broken line X X, Fig. 1. Fig. 3 is a section through the line *y y*, Fig. 2. Fig. 4 shows the time-lock and combination-lock in position upon a vault or safe door. Figs. 5, 6, 7, and 8 are views of detached parts.

I will first describe the construction of the time-lock, and then the manner of bringing it under the influence of the lock or train bolt spindle.

A is the time-lock case, provided with the circular rim or wall C. *c*, Figs. 1 and 2, is the upper plate of the frame of the time-movements, which frame is rigidly secured within the case A. The time-movements are below the plate *c*, and are not shown, as they are not necessary to the explanation of my invention. The vertical shaft *d*, Fig. 2, has its support and a bearing on the middle piece of plate *c*. It also has a bearing furnished it at its outer extremity by the bracket H, the arms *a' a'* of which are secured to the wall C of the lock-case. The shaft *d* is provided at its inner end, and immediately above the plate *c*, with the toothed wheel *h*, Fig. 2. This toothed wheel is situated between the plate *c* and a second plate, *c'*, Figs. 1 and 2, secured to the plate *c*. The points at which the plate *c'* is supported by the plate *c* are so located as not to appear in Fig. 2. The wheel *h* gears with the time-movements in such a manner that they cause it, together with the shaft *d*, to revolve once in seven days. The outer part of the shaft *d* is turned to a smaller diameter than the inner portion, thus forming a shouldered journal, upon which is fitted loosely the large wheel W, Figs. 1 and 2, free to revolve upon the shaft, except when bound to it, as hereinafter described.

In Fig. 1, a portion of the wheel W is broken out to show the mechanism underneath it. Between the wheel W and the bracket H the shaft *d* is threaded, and upon it are the two milled nuts *n n*. By screwing down these nuts against the wheel W the latter is pressed against the shoulder of the shaft *d*, and sufficient friction produced between them to insure the revolution of the wheel W with the shaft, which, as before mentioned, is at the rate of one revolution in seven days. On the circumference of the wheel W, Fig. 1, are six recesses, *b*, and six full parts, F, each recess and an adjacent full part embracing one-seventh of the entire circumference of the wheel—that is, an arc through which the wheel revolves in twenty-four hours—with the exception of the full part F^1, which is larger than the rest. This part F^1, with an adjacent recess, *b*, covers an arc of two-sevenths of the circumference. B is the bolt of the time-lock, arranged in the support K, and is capable of a longitudinal motion. It is kept thrown out by the spiral spring S in the cylindrical chamber in the support K, through which chamber the bolt B passes. (See Fig. 2.) The spring S bears against the ring or shoulder on the bolt B, and against the cap *k*, which closes the chamber, and which is kept in place by small screws. Through the cap *k* is a passage for the tongue *t* of the bolt B. The support K is dovetailed, and secured by the screw *u* into the block N, which is firmly fastened to the wall C of the lock-case. (See Fig. 1.) By unscrewing the small screw *u* the support K and the bolt B may be removed from the rest of the lock by slipping it out of the block N. The bolt B is kept always thrown out by the spring S, unless

pressed back by some greater force. When one of the recesses *b* of the wheel W is opposite the bolt B, the latter is free to be pressed back into the unlocked position; but when one of the full parts is opposite the bolt, it can only be pressed back a short distance, viz., until the tongue *t* rests against the full part of the wheel W. When one of the recesses *b* of the wheel is back of the bolt the lock may be said to be unlocked—that is, the bolt can be pressed back; but when one of the full parts is back of the bolt it may be said to be locked. The recesses *b* may be formed to correspond to as many hours as may be desired by the purchaser. Ordinarily ten hours would be sufficiently long, in which case the full parts F would correspond to fourteen hours, and the large full part F^1 to thirty-eight hours. By loosening the milled nuts *n n* the wheel W may be set in any position relative to the bolt B desired, and the nuts may then be tightened again. By setting the wheel properly the bolt B will be free to be pressed back or unlocked ten hours each week-day, (supposing each recess to correspond to ten hours,) and during the remainder of the time the lock will remain locked, and on account of the large full part F^1, which will cover the time from Saturday afternoon to Monday morning, the lock will remain locked over Sunday. If the wheel W is set to open at eight o'clock in the morning, or at any other hour, it will open or unlock every morning at that hour, (Sundays excepted,) and will close ten hours later.

The wheel W having been once set, the same order of things will follow week after week without other attention than the winding of the time-movement.

As before remarked, the bolt B has a certain amount of play in and out, when the lock is locked—that is, when one of the full parts of the wheel W is back of the bolt—and by means of this play I am enabled to accomplish the unlocking of the lock in case of the stoppage of the time-movements when the lock is in a locked condition.

The tongue *t* of the bolt B has on its under side at the inner extremity a projection, *f*, which moves in the angular groove *g* in the face of the lever L, which is pivoted at *v* to the projection D′ on the inner side of the wall C. By means of this arrangement, as the bolts move in and out to the extent of its play when the lock is locked, the lever L has an oscillating motion imparted to it, which is in turn imparted to the two sliding bars *a a*, Figs. 1 and 2, pivoted to the lever L, one on each side of the pivot *v*.

The projection D′, extending from the wall of the lock-case, supports the lever L, the two bars *a a*, and the bearing *b″* of the shaft *o*, on which shaft are rigidly secured the two ratchet-wheels *r r*, Fig. 1. The bars *a a*, by acting alternately on the two ratchet-wheels *r r*, cause the shaft *o* to revolve, which in turn, by means of the worm or screw upon it, revolves the cogged wheel *m*, Figs. 1 and 2, which carries with it the disk *z*, Figs. 1 and 2, by means of the pin E on the former, and the slot in the latter. Next above the disk *z* is the large wheel W. The wheel W, disk *z*, and cogged wheel *m*, have their centers in the same vertical line.

The hollow arbor *z′*, Fig. 2, on which are placed the wheel *m* and disk *z*, is rigidly secured to the plate *c′*, which is secured to the plate *c* of the frame of the time-movements, as before described. The arbor *z′* is hollow, the shaft *d* passing through it.

On the arbor *z′*, immediately above the plate *c′*, is the wheel *m*, free to be revolved on the arbor *z′* by the worm on the shaft *o*. Next above the wheel *m* is the washer *w*. Above this washer the arbor *z′* is threaded, and screwed upon it is the disk *z*, which is also threaded.

The disk *z* is provided with a notch in its periphery, which notch engages with the pin E attached to the cog-wheel *m*, so that as the wheel *m* is revolved by the shaft *o* the disk will also be revolved. Consequently it will be seen that the disk *z* is revolved by the movement back and forth of the bolt B, and as the disk is screwed onto the shaft *z′* it gradually rises until finally the lug *b′* on the upper side of the disk *z* engages a similar lug, *b″*, on the under side of the wheel W, causing the latter to revolve also. Thus in case of any stoppage of the wheel W, which would leave the lock in a locked condition—that is, with one of the full parts F or F^1 back of the bolt B—I can in a longer or shorter time by alternately pressing in the bolt B, and allowing it to spring back, cause the wheel W to revolve until one of the recesses *b* is brought back of the bolt, when the bolt may be fully retracted.

The time that will be required for the above operation will depend upon the distance the disk *z* has to rise before engaging with the large wheel W. By unscrewing the pin E on the wheel *m* the disk *z* is free to be revolved independently of the wheel *m*, and so can be set at any distance below the wheel W desired, by screwing it up or down on its arbor *z′*, and the pin E can be replaced. Thus the time required for unlocking may be made to be anything from a few minutes up to the longest limit, say ten to twelve hours.

The milled nuts *n n* are not screwed down sufficiently tight to bind the wheel W firmly to the shaft *d*, but only to insure enough friction to cause the wheel W to revolve when the shaft *d* is revolved by the time mechananism, but not so much friction but that the wheel W may be revolved on the shaft *d* by the unlocking mechanism without straining the time-movements.

It is to be observed that the only function of the wheel W is to present alternately a full part F or F^1 and a recess, *b*, to the bolt B, and that it is only in case of the attempted forcing back of the bolt, when a full part is

back of it, that the wheel W exerts any control over anything external to itself. If desired, the wheel W may be made without any full part F^1, as shown in Fig. 6. When the wheel is thus constructed, a recess, *b*, is provided for each day of the week, Sundays included, and a full part for each night. Accompanying the wheel W are several segments F^2, Fig. 8, by means of which one or more of the recesses *b* may be closed, and the lock thus made to remain locked over one or more days, as may be desired. Occasionally it might be desirable to have the lock capable of remaining locked for a longer period than six days, (which would be the longest limit for a lock having a wheel with seven recesses *b*, as the seventh recess would have to be left open or the lock would not unlock at all) as nine days, for example, in which case the wheel W would be provided with ten recesses and ten full parts F, and the necessary number of segments F^2, and the time movements would be so geared as to revolve the wheel W once in ten days, instead of once in seven days.

It now remains to be shown how I locate this lock on the door of a safe or vault, and arrange so that by turning the spindle of the train-bolts or of the combination-lock back and forth a reciprocating motion may be imparted to the bolt B, and thus the unlocking of the time-lock be effected from the outside of the safe or vault independently of the time movements.

In Fig. 4 J is the jamb of the door; D, the door; R, the train-bolts; S′, the spindle, by which the train-bolts are thrown. P is the combination-lock; T, the time-lock; B, the bolt of the latter. L′ is a lever for connecting the bolts of the time and combination locks, and is pivoted to the door at *c″*. Fig. 7 is a section through the line M M, Fig. 5, limited to a portion of the bolt B of the time-lock, the lever L′, and a part of the train-bolts R. The time-lock T is so placed on the door that when the train-bolts R are thrown out or locked, the bolt B of the time-lock (it being thrown out by the spring S) just bears against it, so that the least motion backward of the train-bolts will impart a like motion to the bolt B. The train-bolts R are thrown by means of the spindle S′, which passes through the door and is operated by a handle attached to its outer end. By turning the spindle in one direction, as to the right, the bolts R are thrown out, and in the contrary direction they are thrown back. But when the train-bolts are thrown back they press back the bolt B of the time-lock, and when they are thrown out the bolt of the time-lock is also thrown out by the spring S, and this reciprocating of the bolt B, if continued, will unlock the time-lock (if locked) as previously explained. Thus we see that, by turning the spindle of the train-bolts back and forth, the unlocking of the time-lock may be effected, if desired, independently of the time movements. By connecting the bolt B of the time-lock with the train-bolts R, as indicated by the dotted line, Fig. 4, the spring S may be dispensed with, as, in that case, both motions, in and out, would be imparted to the bolt B by the train-bolts. While the combination-lock P is locked the train-bolts R cannot be moved at all, and, consequently, the unlocking mechanism of the time-lock cannot be operated. When the combination-lock is unlocked the train-bolts may be thrown clear back, and the door opened, provided the time-lock T is also unlocked. When the latter is locked, however, the train-bolts can have only a slight motion backward, not enough to permit of opening the door, but sufficient to work the unlocking apparatus of the time-lock.

The arrangement of the bolt-work on safe and vault doors varies greatly, and, of course, each time-lock would have to be placed on its door in a manner to conform to the particular bolt-work. Occasionally the bolting-mechanism is placed upon the jamb of a safe, with the operating-spindle passing through the jamb, in which case it might be necessary to place the time-lock on the jamb also. The lever L′ and the bolt *p* of the combination-lock form the connection between the bolt B of the time-lock T and the operating-spindle of the combination-lock P, by means of which and the turning of the spindle of the latter back and forth the unlocking of the time-lock will be effected independently of the time-movements. The bolt *p* of the combination-lock is thrown in and out by turning the spindle of the combination-lock back and forth. The lever L′ is pivoted to the door D at *c″*, and is free to swing or move on the pivot in a plane parallel to that of the door. The lever L′ extends from the pivot *c″* under the bolt B of the time-lock to the bolt *p* of the combination-lock P, to the under side of which bolt it is pivoted or attached. A portion of the under side of the bolt B of the time-lock is cut away, thus forming a shoulder, as shown in Fig. 7. The lever L′ passes underneath this cut-away portion of the bolt B, and has a tongue or projection, *t′*, Fig. 7, extending from it sufficiently to engage the shoulder on the bolt B. Now, when the bolt *p* of the lock P is thrown back by turning the combination-lock spindle to the right or to the left, as the case may be, the lever L′ is moved with it, and the tongue *t′*, engaging the shoulder on the under side of the time-lock bolt B, presses the latter back. On throwing the bolt of the lock P out again by a reverse motion of the spindle all the motions above stated are reversed, and the bolt B of the time-lock is free to spring out again; thus by a repetition of these two motions of the lock-spindle, to the right and then to the left, or vice versa, a reciprocating motion is given to the bolt B of the time-lock, which, if continued, will finally unlock it, if locked, as before shown.

It will thus be seen that I am enabled to unlock the time-lock independently of its time-

movements by turning the operating-spindle of the train-bolts alternately to the right and to the left, and that I am also enabled to do the same by turning the spindle of the combination-lock alternately to the right and to the left.

A similar connection might be made between the time-lock and any other spindle passing through the door or jamb of the door.

It may not be advisable to have the time-lock under the influence of more than one spindle.

I do not limit the use of this lock to safes and vaults, as it is intended for any form of strong box where it may be an object to have such a lock placed.

I claim as my invention—

1. The wheel W, arranged to be operated by the time-movements, and having on its circumference alternate recesses and full parts, in combination with one or more segments, F^2, and the bolt B, substantially as and for the purpose specified.

2. The combination of the wheel W and the unlocking mechanism, consisting of the threaded arbor z', disk z, wheel m, worm and shaft o, ratchet-wheels r r, bars a a, lever L, and bolt B, substantially as and for the purpose specified.

3. The wheel W and the unlocking mechanism, consisting of the threaded arbor z', disk z, wheel m, worm and shaft o, ratchet-wheels r r, bars a a, lever L, and bolt B, in combination with the train-bolts and spindle, substantially as and for the purpose specified.

LEWIS LILLIE.

Witnesses:
DANIEL WHITLOCK,
M. H. KING.