Nov. 23, 1937. E. F. LOWRY 2,100,195

ELECTRIC DISCHARGE APPARATUS

Filed Oct. 3, 1935 2 Sheets-Sheet 1

Fig. 1.

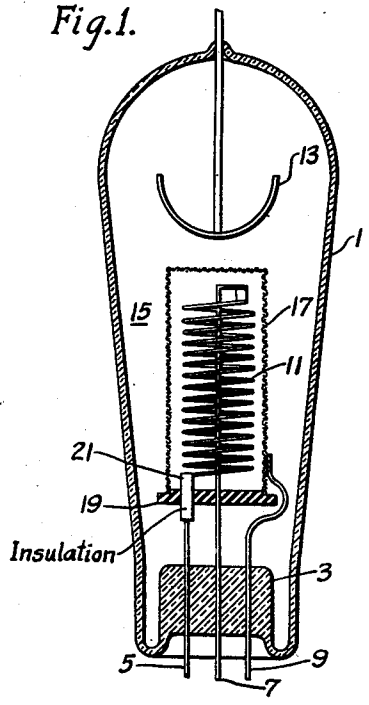

Fig. 2.

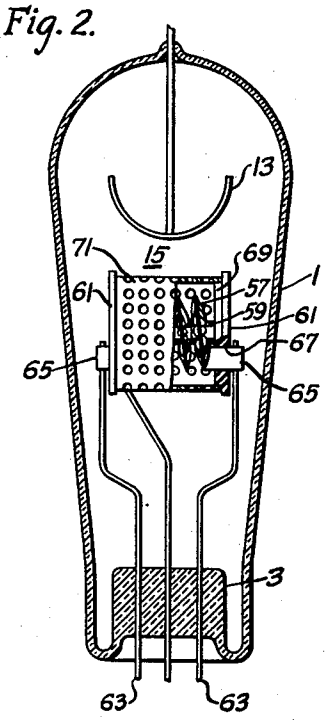

Fig. 3.

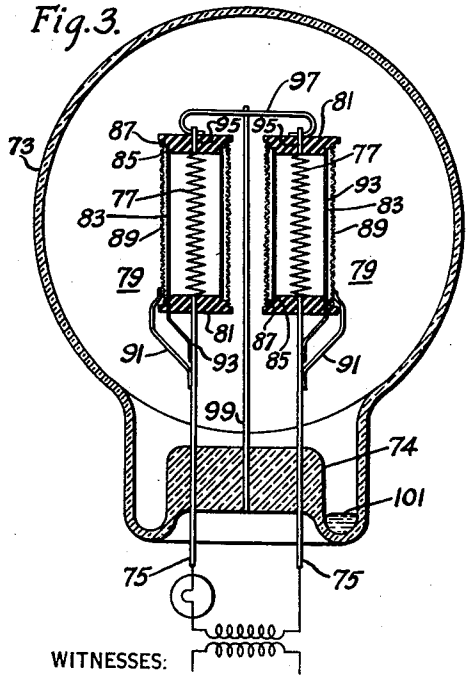

Fig. 4.

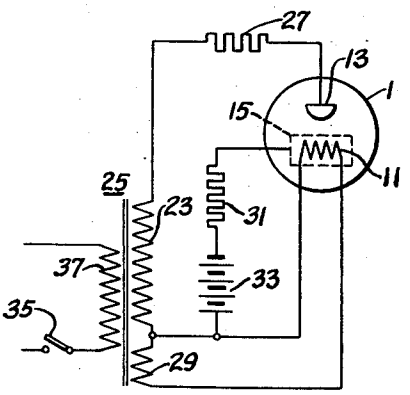

WITNESSES:

Leon J. Taza.

Hyman Richmond

INVENTOR

Erwin F. Lowry.

BY

F. W. Lyle.

ATTORNEY

Nov. 23, 1937. E. F. LOWRY 2,100,195

ELECTRIC DISCHARGE APPARATUS

Filed Oct. 3, 1935 2 Sheets-Sheet 2

Fig. 5.

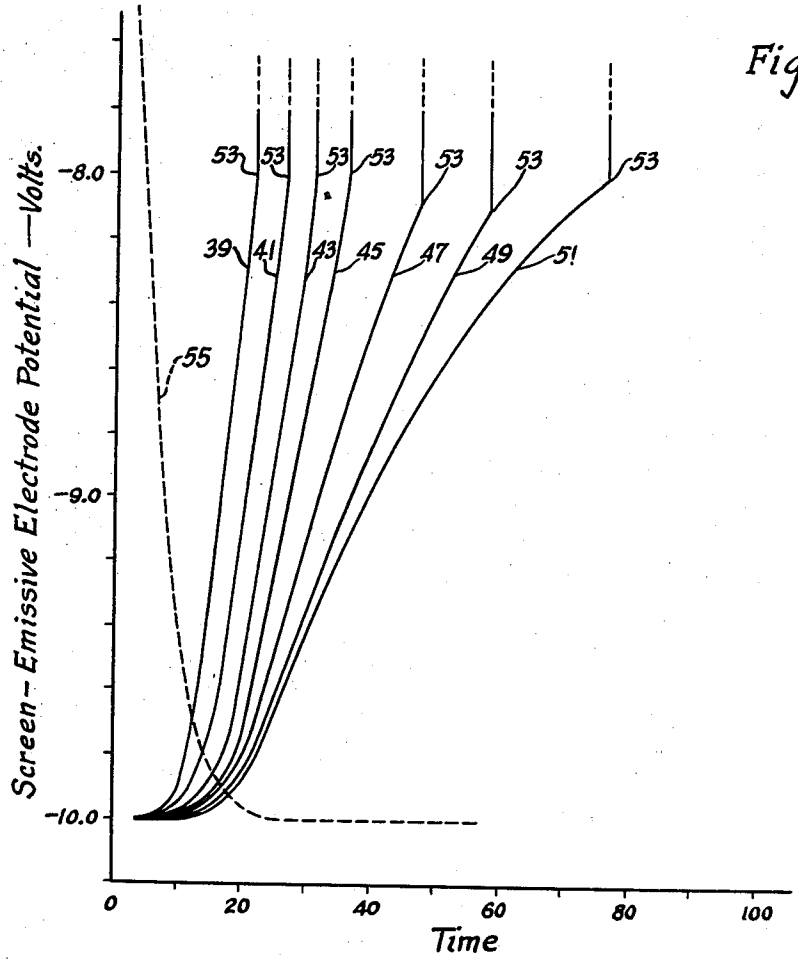

Fig. 6.

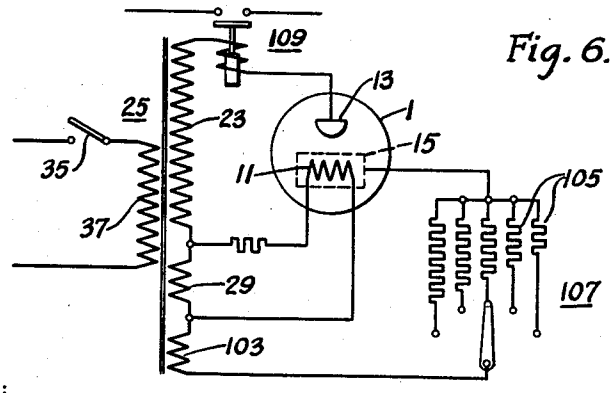

WITNESSES:

Leon J. Zaga.

Hyman Diamond.

INVENTOR

Erwin F. Lowry.

BY

F. W. Leyla.

ATTORNEY

Patented Nov. 23, 1937

2,100,195

UNITED STATES PATENT OFFICE

2,100,195

ELECTRIC DISCHARGE APPARATUS

Erwin F. Lowry, Forest Hills, Wilkinsburg, Pa., assignor to Westinghouse Electric & Manufacturing Company, East Pittsburgh, Pa., a corporation of Pennsylvania

Application October 3, 1935, Serial No. 43,347

6 Claims. (Cl. 250—27)

My invention relates to electric discharge apparatus and it has particular relation to hot cathode discharge apparatus in which the electrodes operate in an atmosphere of gas or vapor.

A hot-cathode gas-filled discharge device is, in general, provided with a cathode consisting of a suitable base, preferably an alloy comprised of nickel, cobalt and ferrotitanium, coated with an emissive material, preferably a mixture of alkaline-earth oxides. When such an element is heated, electrons are emitted by the coating. In addition to the emissive electrode, an anode is provided. A difference of potential is impressed between the anode and the cathode and current is transmitted between these electrodes.

In a gaseous discharge device, the electrons emitted by the cathode react on the gaseous or vapor medium in which the electrodes are immersed to produce positive ions which drift towards the cathode under the action of the electromotive force impressed between the cathode and anode. When the cathode is heated to the proper temperature, sufficient electrons are emitted from its surface to protect the coating from the effects of the positive ions which are drawn to the cathode. If, however, the cathode is not heated to a sufficiently high temperature at the same time a potential difference is impressed between the anode and the cathode, the positive ions impinging on the cathode attack the emissive coating. In addition the arc which is produced under the action of the anode-cathode potential has a comparatively high potential drop by reason of the scarcity of electrons emitted from the cathode. Under such circumstances hot spots tend to form on the surface of the cathode with the result that considerable portions of the active coating are stripped.

Customarily, the discharge devices of the type involved here are provided with cathodes which must be heated for a considerable interval of time before they are safe from positive ion bombardment. As the current output for which the discharge device is provided increases, the size of the cathode increases and the time required for heating the cathode to the proper temperature correspondingly increases. The necessary time may vary from five seconds to approximately 5 minutes or more.

It is an object of my invention to provide a discharge device of the hot-cathode gas or vapor-filled type in which the cathode shall be protected from damage thereto arising when an anode-cathode potential is applied prior to the time that the cathode reaches a temperature at which its emission equals or exceeds the maximum anode current to be drawn through the discharge device.

Another object of my invention is to provide a system incorporating a hot cathode gas or vapor-filled discharge device in which the cathode shall be protected from the deleterious effects of premature application of anode potential.

An incidental object of my invention is to provide a time delay relay system.

Another incidental object of my invention is to provide a time delay relay system in which the time of operation of the relay shall be variable with facility.

A further incidental object of my invention is to provide an illuminating unit of the glow discharge type that shall be capable of continuous operation over a long interval of time.

More concisely stated, it is an object of my invention to provide a circuit incorporating a hot-cathode gaseous electric discharge device provided with an element that shall be connected in the circuit in such manner as to completely protect the cathode from the deleterious effects arising from premature application of the anode-cathode potential.

According to my invention, the discharge device is provided with a shield which completely encloses the cathode. The shield is so constructed that electrons from the cathode may be transmitted through its surface. This object is accomplished either by providing the shield with one or more perforations or by constructing the shield of such thin material that it is punctured by the electrons from the emissive electrode as they move under the influence of the anode-cathode potential. The interior surface of the shield is designed to be thermionically active. However, I have found that the shield, while it may be, need not be coated before it is mounted in the discharge device. An uncoated shield may be mounted adjacent to the cathode. After the cathode has operated for a short interval of time, sufficient coating material is projected from the cathode onto the shield to render the interior surface of the latter emissive.

The shield is connected in circuit with the cathode in such manner that when the cathode is below the proper temperature for emission, the shield operates as a blocking control electrode. It is moreover disposed in such proximity to the cathode that it is heated thereby. As the temperature of the cathode rises, that of the shield also rises and a continuously increasing stream of electrons is emitted from the interior surface of

the shield. A continuously increasing current is therefore transmitted between the shield and the cathode. The effect of this current is to so decrease the blocking potential of the shield that when the cathode is at the proper temperature for supplying current to the anode, the shield ceases to block the discharge between the cathode and the anode.

The novel features that I consider characteristic of my invention are set forth with particularity in the appended claims. The invention itself, however, both as to its organization and its method of operation, together with additional objects and advantages thereof, will best be understood from the following description of specific embodiments when read in connection with the accompanying drawings, in which—

Figure 1 is a view in section showing a discharge device constructed in accordance with my invention,

Fig. 2 is a view in section showing another discharge device constructed in accordance with my invention,

Fig. 3 is a view in section showing a glow discharge lamp constructed in accordance with my invention,

Fig. 4 is a diagrammatic view showing an embodiment of my invention,

Fig. 5 is a graph illustrating the operation of my invention, and

Fig. 6 is a diagrammatic view showing the elements of a time delay relay constructed in accordance with my invention.

The apparatus shown in Fig. 1 comprises an envelope 1 having a reentrant stem 3 and containing an atmosphere of gas or vapor. Through the re-entrant portion 3 a plurality of metallic rods 5, 7 and 9 are sealed. Two of the rods 5 and 7 serve as supports and as current conductors for a helical filament 11 preferably composed of an alloy coated with a mixture of alkaline earth oxides. When the filament 11 is heated by current transmitted through the conductors, electrons are emitted thereby. An anode 13, composed of nickel, carbon or other suitable material, is sealed through the top of envelope 1.

The emissive electrode 11 is completely enclosed by a screening element 15 composed of a hollow cylinder 17 of wire mesh closed at the bottom by an insulating disk 19. The mesh cylinder 17 is secured to the disk 19, and the hollow assembly is supported on an insulating tube 21, enclosing a portion of the conductor 5 that supports the emissive electrode 11, and by the rod 9 which is welded to the mesh 17. The rod 19 serves also as a connector between the mesh 17 and the other elements of the apparatus.

The mesh 17 is provided with a layer of emissive material on its interior surface either before it is mounted in the envelope or, from the emissive electrode, after it is mounted in the envelope. It is, moreover, disposed in such proximity to the emissive electrode 11 that when the latter is heated, the radiant energy emitted thereby raises the temperature of the mesh to a value at which electrons are emitted from its interior surface. When the mesh 17 thus becomes emissive it operates as a portion of the cathode. In addition, the emission therefrom tends to neutralize whatever blocking action it has as a control electrode and to permit the passage of current from the emissive electrode 11 to the anode 13 when the former attains the proper temperature.

The operation of my invention will be understood from a consideration of the apparatus shown in Fig. 4. In this system, an alternating difference of potential is impressed from a secondary-section 23 of a suitable transformer 25 between the anode 13 and the emissive electrode 11 through the usual load 27. The emissive electrode 11 is heated from another secondary section 29 of the transformer 25. The screening element 15 is connected to the emissive electrode 11 through a resistor 31 and a biasing battery 33. When the system is first energized by closing a switch 35 in the primary 37 of the transformer 25, heating energy is supplied to the emissive electrode 11 and a difference of potential is impressed between the electrode 11 and the anode 13. If the emissive elctrode 11 and anode 13 were the only elements in the container 1, positive ion bombardment of the electrode 11 would commence before it is heated to a safe temperature and the electrode would be seriously damaged.

In accordance with my invention the shield 15 is interposed between the emissive electrode 11 and the anode 13 and a negative potential is impressed thereon by the battery 33. The shield 15 thus operates as a control electrode to block the passage of substantial current between the emissive electrode 11 and anode 13 and protects the electrode 11. As the temperature of the electrode 11 increases, it radiates more and more energy to the shield, 15. The shield, in turn, being heated emits electrons which, in view of the fact that a positive potential is impressed between the electrode 11 and the shield 17, are collected by the electrode 11 and transmitted through the resistor 31. A drop in potential of a polarity opposite to that of the biasing potential 33 is thus impressed across the resistor 31, and this potential tends to compensate for the effect of the biasing potential. As the temperature of the shield increases, the blocking effect of the biasing potential decreases until a value is attained at which the shield no longer blocks the passage of current between the emissive electrode 11 and the anode 13. At this point the discharge device becomes fully operative and the shield 15 functions substantially as a portion of the cathode. The resistor 31 is so chosen that the blocking effect of the shield 15 persists until the emissive electrode 11 is at the proper temperature for passage of current.

In Fig. 5, the variation of the potential impressed between the shield 15 and the emissive electrode 11 as a function of time is illustrated graphically. Potential is plotted as ordinate and time as abscissa. The zero time coordinate corresponds to the instant at which heat is applied to the electrode 11. The full line curves 39, 41, 43, 45, 47, 49 and 51 correspond to different magnitudes of the resistor 31, the curve 39 corresponding to a resistance of 1000 ohms and the curve 51 to a resistance of 130 ohms. The point at which the discharge device becomes energized is represented by a discontinuity 53 in the slope. For the discharge device utilized in obtaining the data for the curves the shield ceases to have a blocking effect at approximately —8 volts.

As can be seen from a consideration of the full line curves 39, 41, 43, 45, 47, 49 and 51 the interval of time during which the cathode is heated before a discharge is incited in the discharge device may be varied from approximately 20 seconds to approximately 75 seconds by varying the resistor 31 in series with the shield 15 from 1000 ohms to 130 ohms.

The broken line curve 55 shown in Fig. 5 illustrates the variation of the negative potential

between the shield 15 and the emissive electrode 11 as the shield cools for the circuit corresponding to curve 39, i. e., for a 1000 ohm resistor. It is to be noted that for the particular tube utilized in providing the data for the curve, the shield becomes effective in blocking current between the anode 13 and the emissive electrode 11 approximately 5 seconds after the heating supply for the shield 15 is turned off. This value may, of course, be varied by varying the structure of the discharge device and its appurtenant elements.

It is to be noted that in addition to operating as a protecting electrode for the cathode, the shield 15 may be utilized as an ordinary control electrode. In such a case, sufficient biasing potential is provided in the shielding circuit to make certain that the control potential supplied does not energize the discharge device prematurely.

In Fig. 2, another discharge device, constructed in accordance with my invention, is shown. In this case, the filamentary electrode 57 is mounted on a ceramic tube 59, in turn supported on studs (not shown) projecting from disks 61 of ceramic or other insulating material. The ceramic disks 61 are, in turn, supported on rods 63 sealed through the re-entrant portion 3 of the envelope 1. The rods 63 carry plates 65 that project through slots 67 in the disks 61 and are welded to the filamentary portion 57 of the cathode. Each ceramic disk 61 is provided with a steam portion 69 on which a cylinder 71 composed of perforated sheet metal is supported. The sheet metal cylinder 71 operates as a shield in the manner discussed above.

In Fig. 3, a lamp constructed in accordance with my invention is shown. The lamp comprises an envelope 73 through a reentrant portion 74 of which rods 75 project. A plurality of heating elements 77 suitably supported on rods 75 are disposed within the envelope. Each filamentary element 77 is enclosed within a tube 79 having disks 81 of ceramic or other insulating material at the ends and emissive walls 83 extending between the ends. The disks 81 are provided with shoulders 85 and 87 and the emissive walls 83 are supported between the innermost shoulders 85 of each set of disks. On intermediate shoulders 87 of the disks, screening members 89 are supported. The screening members 89 are preferably composed of perforated sheet cylinders similar to the cylinder utilized in a discharge device of the type shown in Fig. 2. Connectors 91 are welded to each of the perforated cylinders 89 and to the rods 75 to connect the screening member 89 and the emitting electrodes. Similar conductors 93 are welded to the emissive walls 83 and the rods 75. The filamentary elements 77 are each welded to a short rod 95 at the top. The rods 95 project through the ceramic disks 81 and are welded to a cross piece 97. The cross piece 97 thus connects the emissive electrodes in series with each other. To support each of the assemblies 77, 79, 89 an upright member 99 sealed in the stem 74 and welded to the cross piece 97 at the center is provided. To provide the necessary vapor atmosphere, a globule of mercury 101 is disposed within the envelope.

Power is supplied to the lamp by connecting the cathodes to an alternating source. The source operates to heat the cathodes and at the same time to impress a difference of potential between them which causes current to pass alternately in one direction and the other between the electrode assemblies.

It is to be noted that in the lamp a biasing potential is not provided between the shielding element 89 and the emissive electrode. I have found that in the apparatus here involved biasing potential is not necessary since zero bias potential is sufficient to prevent the premature initiation as long as the pressure of the mercury vapor is low.

Incidentally, it is to be noted that in the apparatus of the type shown in Fig. 4, the biasing potential may sometimes be zero. Such a situation occurs in cases where the discharge device requires a positive control potential for ignition.

In Fig. 6, a time delay relay constructed in accordance with my invention is shown. The apparatus shown in this view to a large extent resembles the apparatus shown in Fig. 4. However, in lieu of a biasing battery 33, an alternating current bias is shown as utilized. It is obvious that these elements are interchangeable and their use depends in each case on the particular circumstances. This bias is supplied by a winding 103 of the secondary 25 which is so connected to the shielding element 15 that the potential supplied is in opposite phase to the anode-cathode potential. The biasing section 103 is connected to the shielding element 15 through a resistor 105 which may be selected at will from a set 107 of resistors.

When the switch 35 in the primary 37 of the transformer 25 is closed, power is supplied to the discharge device. However, the discharge device does not become immediately operative. An interval of time elapses before a discharge is incited in the discharge device which depends on the magnitude of the resistor 105 selected and the biasing potential applied. When a period of time corresponding to the particular resistor element 105 connected passes after the switch 35 is closed, the discharge device becomes operative and energizes a relay 109 in its anode-cathode circuit.

The switch 35 and the relay 109 are used here only for the purpose of illustration. The former symbolizes any operation which may take place to initiate the operation of the relay and the latter symbolizes any general work-circuit which may be supplied through the discharge device. In lieu of a set 107 of resistors 105 a single variable resistor may moreover be utilized.

My invention has been shown and described herein as applied specifically to a hot cathode discharge device of the gas or vapor-filled type. On occasions, it may happen that the principles of my invention are applicable to hot cathode discharge devices of the high vacuum type. Where my invention is applied in a hot cathode high vacuum discharge device, such application is understood to fall within the scope of equivalents of my invention.

Although I have shown and described certain specific embodiments of my invention, I am fully aware that many modifications thereof are possible. My invention, therefore, is not to be restricted except insofar as is necessitated by the prior art and by the spirit of the appended claims.

I claim as my invention:

1. In combination an elctrode that is to be heated to emit electrons, means for heating said electrode, an electrode for collecting the electrons emitted by said first-named electrode, a member disposed adjacent to said emissive electrode in the path of the heating energy emitted by said emissive electrode, said member being capable of emitting electrons when it is heated from said first-mentioned electrode, means for impressing

a difference of potential between said electron collecting electrode and said emissive electrode, connecting means establishing a normal potential relationship between said member and said emissive electrode whereby when said member is below a predetermined temperature it operates as a blocking electrode to block the passage of current between said emissive electrode and said collecting electrode and when it is heated to a temperature above said predetermined value its blocking effect is suppressed and electrons pass between said emissive electrode and said collecting electrode.

2. In combination an electrode that is to be heated to emit electrons, means for heating said electrode, an electrode for collecting the electrons emitted by said first-named electrode, a member disposed adjacent to said emissive electrode to be heated by the heating energy emitted by said emissive electrode, said member being capable of emitting electrons when it is heated, means for impressing a difference of potential between said collecting electrode and said emissive electrode, a current path including said member and said emitting electrode, said current path including means by the operation of which a difference of potential is impressed between said member and said emissive electrode of such magnitude that the transmission of current between said emissive electrode and said collecting electrode is blocked when the temperature of said member is below a predetermined value and additional means operating to vary the last-said difference of potential with the variation in temperature of said member in such manner that when said member is above a predetermined temperature passage of current between said emissive electrode and said collecting electrode is permitted.

3. Apparatus according to claim 2, characterized by the fact that the means included in said current path is a source of potential and an impedance, the polarity of the source of potential being such that said current path constitutes a circuit in which electrons emitted by said member are transmitted to said emissive electrode and through the source and impedance back to the member.

4. Apparatus according to claim 2, characterized by the fact that the means included in said current path is a source of potential and a resistor, the polarity of the source of potential being such that said current path constitutes a circuit in which electrons emitted by said member are transmitted to said emissive electrode and through the source and resistor back to the member.

5. A time delay relay comprising an electrode that is to be heated to emit electrons, means for heating said electrode, another electrode, means for impressing a potential between said electrodes, a member disposed adjacent to said emitting electrode to be heated by the heating energy emitted thereby, said member being capable of emitting electrons when heated, a current path including said member and said emissive electrode through which the current emitted by said member is transmitted, said current path including means functioning to impress a potential between said member and said emissive electrode to block the passage of current between said emissive electrode and said other electrode when the temperature of said member is below a predetermined value, and a resistor through which the current from said member is transmitted to increase the potential of said member to such a value that passage of current between said emissive electrode and said other electrode is permitted and means responsive to the current transmitted between said emissive electrode and said collecting electrode.

6. Apparatus according to claim 5, characterized by the fact that the resistor is variable and the time interval of the time delay may be set by adjusting the resistor to a predetermined value.

ERWIN F. LOWRY.