(19) Europäisches Patentamt
European Patent Office
Office européen des brevets

(11) EP 1 244 180 B1

(12) **EUROPEAN PATENT SPECIFICATION**

(45) Date of publication and mention of the grant of the patent:
09.03.2005 Bulletin 2005/10

(51) Int Cl.[7]: **H01R 12/08**

(21) Application number: **02006110.7**

(22) Date of filing: **18.03.2002**

(54) **Electrical connector for flat cable and its manufacturing method**

Elektrischer Verbinder für Flachkabel und Herstellungsverfahren

Connecteur électrique pour câble plat et méthode de fabrication

(84) Designated Contracting States:
DE FR GB IT

(30) Priority: **23.03.2001 JP 2001083962**

(43) Date of publication of application:
25.09.2002 Bulletin 2002/39

(73) Proprietor: **HIROSE ELECTRIC CO., LTD.**
Shinagawa-ku Tokyo (JP)

(72) Inventor: **Tsunematsu, Kazuhisa,**
c/o Hirose Electric Co., Ltd
Tokyo (JP)

(74) Representative: **Pätzold, Herbert, Dr.-Ing.**
Dr. Pätzold, Buhl-Müller, Tandler & Kollegen
Steubstrasse 10
82166 Gräfelfing (DE)

(56) References cited:
EP-A- 0 618 643
EP-A- 0 743 715
EP-A- 0 773 608
US-B1- 6 171 137

Note: Within nine months from the publication of the mention of the grant of the European patent, any person may give notice to the European Patent Office of opposition to the European patent granted. Notice of opposition shall be filed in a written reasoned statement. It shall not be deemed to have been filed until the opposition fee has been paid. (Art. 99(1) European Patent Convention).

EP 1 244 180 B1

Printed by Jouve, 75001 PARIS (FR)

Description

[0001] The present invention relates to electrical connectors for a flat cable and its manufacturing method.

[0002] An electrical connector of this type is used by being attached to a circuit board. For an electrical connector according to the preamble of claim 1, there is one disclosed in Japanese patent application Kokai No. 9-35828.

[0003] As Fig. 3 shows, in this connector, a flat cable (flexible board) 51 is inserted into an inserting space of an open mouth 53 in a direction of the flat cable surface, direction A, so as to be placed on contact sections 54A of terminals 54 which are arranged facing to the open mouth of a housing 52. In the figure, the terminals are made by stamping a metal sheet maintaining its flat surface, and are arranged with predetermined spacing in a perpendicular direction to the plane of the figure.

[0004] A pressure member 55 to open and close the open mouth is provided at the open mouth 53 of the housing 52, so as to freely turn around. The pressure member 55 enables the insertion of the flat cable 51 by opening the inserting space at the illustrated open position, and presses the inserted flat cable 51 so that the flat cable connects with a contact section 54A of the terminal at the closed position where the pressure member is turned downward.

[0005] The above-described terminal 54 has an upper arm 57 and a lower arm 58. The upper arm 57 is supported by an upper wall 52A of the housing 52, and has a bearing section 59 at its end, while the lower arm 58 has a contact section 54A at its end. The pressure member 55 is supported at circular end surface of the bearing section 59 of the terminals 54 so as to freely turn around.

[0006] There is a demand for a low-profile connector to miniaturize the electronic equipment where this type of connector is used, that is, a demand to be smaller in height direction in Fig. 3.

[0007] However, in the connector in Fig. 3, since an upper wall 52A of the housing supports the bearing section 59 which receives rotational force, it is difficult to reduce the thickness of the upper wall 52A. Also, the bearing section 59 is positioned under the upper wall 52A, and its circular section protrudes downward, which make the connector high as a whole.

[0008] Accordingly, it is an object of the present invention to provide an electrical connector for a flat cable which is low-profile, without impairing the strength of the bearing section.

[0009] The above object is achieved by the invention as claimed in claim 1.

[0010] Claim 10 discloses a method of manufacturing such an electrical connector.

[0011] Embodiments of the invention will now be described by way of examples with reference to the accompanying drawings, in which:

Figs. 1(A) through (C) are cross-sectional views of an electrical connector according to an embodiment of the present invention. The pressure member is at the open position in Fig. 1(A), at in-between position in Fig. 1(B), and at the closed position in Fig. 1(C).

Figs. 2 (A) through (C) illustrate how to assemble the electrical connector of Fig. 1. Fig. 2(A) illustrates the beginning of inserting a terminal into a housing, Fig. 2(B) and (C) illustrate the terminal in the process of insertion, and Fig. 2(D) illustrates the completion of the insertion.

Fig.3 is a cross-sectional view of a conventional electrical connector.

[0012] In the first embodiment of an electrical connector for a flat cable as shown in Figs. 1(A) through(C), a substantially box-shaped housing 1 has a plurality of terminals 2. The terminals 2 are made by stamping a metal sheet, or by similar method, maintain each flat surface, and are arranged in perpendicular direction to the plane of the figure with a predetermined spacing.

[0013] The terminal 2 has an upper arm (support arm) 4, a lower arm 5, and a connect section 6, and is positioned along the inner surfaces of an upper and a lower walls which form a slot 3 of the housing. The connection section 6 protrudes outward of the housing; in opposite direction to the lower wall 8. The upper arm 4 has engaging protrusions 4A and 4B at an upper edge of its base section, so that the terminal is prevented from sliding out from the housing by engaging into the inner surface of the upper wall 7 of the housing when it is inserted from left side to the predetermined position. The upper arm 4 has relatively high rigidity, related to a deflection in the plane of the figure, particularly higher in comparison with the lower arm 4. An end 9 of the upper arm 4 is broader in height direction, and an upper edge 9A of the end 9 is positioned upward (outer) from a lower (inner) surface of the housing. Also, a transitional section between the upper edge 9A and the upper arm 4 forms a shoulder 10 with gentle slope, and gradually extends along the lower surface of the upper wall.

[0014] A groove-shaped bearing section 11 with concave curve is formed at lower part of the end 9. The bearing section 11 is to support a pressure member described below so as to freely turn over, and has a function of a bearing. Since the upper edge 9A is upward from the lower surface of the upper wall 7 and extends to a proximity of the upper surface, the width between a bottom of the groove of the bearing section and the upper edge 9A is so large in height direction that this area becomes strong.

[0015] The lower arm 5 of the terminal 2 has narrower width (dimension in height direction in the figure) in comparison with the upper arm 4, and has flexibility in a plane parallel to the plane of the figure. A lower edge of the lower arm 5, especially a portion close to the end,

has an incline 5A which is slanted upward. In addition, a contact section 12 is formed at the end, and protrudes towards the bearing section 11 of the upper arm 5.

[0016] As described above, the housing 1 has as many receiving slots 3 parallel to the plane of the figure as terminals. The receiving slot 3 is to insert the terminal from left side, and the terminal is made from a metal sheet and maintains its metal sheet surface. The upper wall 7 and the lower wall 8 of the housing 1, which define the upper and lower ends of the receiving slot, determine an inserting position of the terminal 2. The base section of the lower arm 5 contacts with an inner surface of the lower wall 8, as described above, such that the engaging protrusions 4A and 4B engage the upper wall 7 of the housing to ensure the terminal position and prevent its sliding out. Also, the lower wall 8 covers the whole area of the lower surface of the housing, so that substantially whole area of the housing contact with a circuit board when the connector is mounted on the circuit board.

[0017] The housing 1 has a cable slot 13 to insert a flat cable C from right side into the housing 1. The cable slot 13 is formed so as to laterally link through the plurality of terminals between both side walls or at the width of the flat cable C (dimension in perpendicular direction to the plane of the figure), that is, with a width equal to a distance between ends of arranged terminals.

[0018] Also, the housing 1 has an opening at right side of the upper wall, and the upper part of the cable slot is open, which makes an open mouth. In other words, the open mouth 14 is open in right side and extends to the end of the upper wall of the housing 1 in left side, while it is open upward from the cable slot 13, as described above.

[0019] The open mouth 14 of the housing 1 has a pressure member 15 made of insulating material. The pressure member 15 is supported by the bearing section 14 of the terminal 2, so as to freely turn over between an open position in Fig. 1(A) and a closed position in Fig. 1(C). The pressure member 15 is placed into the opening of the upper wall at the open position, as illustrated in Fig. 1(A). The pressure member 15 has an operating section 16 at the top side and a groove 17 at the opposite side. The operating section 16 is a portion to give rotational force to the pressure member 15, and the groove 17 receives the end 9 of the terminal 9. Therefore, the groove 17 forms slits in zigzag fashion corresponding to the terminals 2. Moreover, a shaft 18 is provided in the groove 17, and supported by the bearing section 11 of the terminal 2 so as to freely rotate. The distance between a bottom 17A of the groove 17 and a center 18A of the shaft 18 (rotational axis) at the open position is designed so that the bottom 17A of the groove 17 strongly engages with a shoulder 10 of the terminal 2. The bottom 17A and the shoulder 10 form an engaging section together at the open position, and hold the pressure member 15 at the open position by its engaging force.

[0020] As described above, the connector in the present embodiment is used in the following manner.

(1) First, place the connector at a predetermined position on a circuit board (not illustrated), and then connect the connection section 6 of the terminal 2 with a corresponding circuit section on the circuit board by soldering or the like.

(2) After that, turn over a pressure member 15 upward to the open position as shown in Fig. 1(A). At the open position, the pressure member 15 is maintained at the open position being restricted from turning back to the closed position by an engaging force between the bottom 17A of a groove 17 of the pressure member 15 and the shoulder 10 of the terminal 2 which form an engaging section.

(3) When the pressure member is at the open position, the open mouth 14 is retained open wide rightward. Therefore, the entrance of the cable slot 13 (inserting space) is exposed enough to see from the inserting side of a flat cable C. The flat cable C needs to be inserted into the cable slot 13, having a contact surface as a lower surface, till its front edge contacts with the deepest wall.

(4) After inserting the cable to the predetermined position, release the engagement by turning the pressure member clockwise against the engaging force, and bring the pressure member 15 over to the closed position in Fig. 1(C) via the in-between position in Fig. 1(B). The pressure member 15 strongly presses the flat cable C towards a contact section 12 with the pressure section 15A, so that both are electrically connected.

[0021] Also, in the connector describe above, the terminal 2 is inserted into the housing in a manner illustrated in Fig. 2(A) through (D).

(i) First, insert the upper arm 4 and the lower arm 5 of the terminal 2 into the receiving slot 3 of the housing from a side (left side in the figure), elastically deflecting the upper arm 4 and the lower arm 5 of the terminal 2 so as to make the distance between the ends of both arms narrower.

(ii) Proceed the insertion while the distance of the upper arm 4 and the lower arm 5 is kept narrow. See Figs. 2(B) and (C).

(iii) Further proceeding the insertion, the end 9 of the upper arm 4 reaches an opening of the upper wall (upper portion of the open mouth 14). Being released from the elastic deformation, the terminal reaches the predetermined inserting position with the original shape. (Fig. 2(D))

[0022] At this time, the terminal 2 is secured to the housing 1 at a base side (left side in the figure).

[0023] In addition, according to the present invention, since the lower arm 5 has an incline 5A at a lower edge close to the end, if the terminal is inserted being tilted in a manner that the incline slides along the inner surface of the lower wall 8, as illustrated by the two dotted lines in Fig. 2(A), the terminal can be inserted even if the degree of the elastic deformation between both arms is small. Here, the shape of the bearing section is not limited to concave curve, and can be a convex curve.

[0024] As described above, according to the present invention, since the bearing section of the support member to guide rotation of the pressure member is positioned outer than the lower surface of the upper wall of the housing in the opening of the housing, space for the thickness of the upper wall which is open because of the opening can be effectively used for the bearing section. Therefore, the connector can be low-profile for the thickness of the upper wall. Moreover, since it uses the space described above, the bearing section does not have to be made small in the height direction, and the strength of the bearing section itself and the area around the bearing section are not impaired. Also, since the support member is made of metallic material, such as a terminal, it can retain high strength in comparison with the upper wall of the housing. And, according to the method of the present invention, since the height dimension can be made small temporarily, the dimension of the housing does not need to be large; therefore the connector can be easily composed. In addition, since the lower arm has more flexibility than the upper arm, the lower arm elastically deforms when the distance between the arms is widen by the insertion of a flat cable. At this time, because of the lower arm's deflecting back to the original shape, the contact section provided to the lower arm can securely contact with the inserted cable.

Claims

1. An electrical connector for inserting a flat cable (c), comprising:

- a box-shaped housing (1)
  - having an upper wall (7) and a lower wall (8),
  - the inner sides of said upper and lower housing walls forming a housing slot for inserting said flat cable into said housing slot at its one side (right side) of said housing,
  - said upper housing wall having a wall opening (14)
  - at least one terminal (2) is insertable into said housing slot at its other side (left side) of said housing
- said terminal having an upper bearing support arm (4) and a lower cable contact arm(5),
  - the inner sides of said upper and lower arms forming a terminal slot between said arms for receiving the front end of said cable inserted into said housing slot.
  - the outer sides of said upper and lower arms of said terminal having contact with the inner sides of said upper and lower housing walls,
  - said lower contact arm having at its front end portion a cable contact section (12) and said upper bearing support arm having at its front end portion (9) a bearing section (11),
- a pressure member (15) is positioned in said opening (14) of said upper housing wall at the opposite side of said cable contact section (12),
  - the front side of said pressure member having a portion (18) which is freely turnable supported in said bearing section (11) of said upper support arm of said terminal (2) between an open position upon which said housing slot (13) at its right side is open for inserting said flat cable (c) and a closed position upon which said housing slot is closed and said flat cable is pushed toward said cable contacting section (12),

characterized in that

the front end portion of the upper support arm (4) of said terminal (2) together with its bearing section (11) is positioned in said wall opening (14) of said upper housing wall (7) so that the upper edge (9A) of the front end portion of the upper support arm (4) is positioned higher than the inner surface of said upper housing wall (7).

2. The electrical connector according to claim 1, **characterized in that** said portion (18) at the front side of said pressure member is formed as a bearing shaft positioned with its rotation axis (18A) in said bearing section (11) of the upper arm (4) of said terminal (2) and is freely rotable around said rotation axes (18A) between the open and closed positions of said pressure member.

3. The electrical connector according to claim 1 or 2 **characterized in that** said pressure member (15) having an operating section (16) at its top side and a groove (17) at its opposite side, said operation section is a portion to give rotation force to said pressure member so that said groove (17) contacts the end portion (9) of the upper arm of said terminal (2) in the open position of the pressure member

4. The electrical connector according to claim 3, **characterized in that** the distance between the bottom (17A) of the groove (17) of said pressure member (15) and the rotation axis (18A) of said bearing shaft (18) at the open position of said pressure member (15) is designated so that a part of the bottom (17A) of said groove (17) engages with a shoulder (10) at the upper support arm (4) of said terminal (2)

5. The electrical connector according to claim 1, **characterized in that** at least one of said lower and upper arms (4, 5) of said terminal (2) being so flexible that its upper and lower arms (4, 5) are insertable into said housing slot (3) attaching the inner surfaces of the upper and lower housing wall (7, 8), respectively.

6. The electrical connector according to claim 5, **characterized in that** a portion close to the front end of the lower arm (5) with the cable contacting section (12), having an incline (5A) which is slanted upwardly

7. The electrical connector according to claim 6 **characterized in that** the lower arm (5) is more flexible than the upper arm (4)

8. The electrical connector according to one of the above mentioned claims, **characterized in that** said upper arm of the terminal having engaging protusions (4A, 4B) at the upper edge at its base section so that the terminal is prevented from sliding out from said housing (1) by engaging the protusions into the inner surface of the upper housing wall (7)

9. The electrical connector according to one of the above mentioned claims **characterized in that** the front end of the pressure member (15) opposite to said operation section (16) is formed as a pressure section so that the pressure member in its closed position presses the flat cable (c) toward said contact section (12).

10. A method for manufacturing the electrical connector according to one of the claims 1 and 5, which comprises the steps of: inserting said terminal (2) into said housing slot in a manner that said upper arm (4) and said lower arm (5) are guided by inner surfaces of said upper and lower housing walls (7, 8) respectively, while said lower arm (5) is deflected toward said upper arm (4) and then deflected back to its original shape at a time of insertion to a predetermined position.

11. A method for manufacturing the electrical connector according to claim 6, which comprises the steps of: tilting said terminal I(2) downward so that a slanted part of said lower arm (5) is parallel to said inner surface of said lower housing wall (8); inserting said terminal (2) such that said slanted part is guided to said inner surface of said lower housing wall; and completing said insertion to a predetermined position oy releasing said tilting of said lower arm.

Patentansprüche

1. Elektrischer Verbinder zum Einsatz eines flachen Kabels (c), mit:

einem box-förmigen Gehäuse (1), mit

- einer oberen Wand (7) und einer unteren Wand (8),
- die inneren Seiten der oberen und unteren Gehäusewand bilden einen Gehäuseeinschub für den Einschub des flachen Kabels in dem Gehäuseeinschub an einer Seite (rechte Seite) des Gehäuses,
- die obere Gehäusewand hat eine Wandöffnung (14),
- wenigstens ein Anschluß (2) ist in den Gehäuseeinschub an der anderen Seite (linke Seite) des Gehäuses einschiebbar,

der Anschluß hat einen oberen Lager-Stütz-Arm (4) und einen unteren Kabelkontaktarm (5),

- die inneren Seiten des oberen und unteren Arms bilden einen Anschlußeinschub zwischen den Armen zur Aufnahme des vorderen Endes des Kabels, das in den Gehäuseeinschub eingeführt ist,
- die äußeren Seiten des oberen und unteren Arms des Anschlusses haben Kontakt mit den inneren Seiten der oberen und unteren Gehäusewand,
- der untere Kontaktarm hat an seinem vorderen Ende einen Kabelkontaktabschnitt (12) und der obere Lager-Stütz-Arm hat an seinem vorderen Endabschnitt (9) einen Lagerabschnitt (11)

ein Druckelement (15) ist in der Öffnung (14) der oberen Gehäusewand an gegenüberliegenden Seiten des Kabel-Kontakt-Abschnitts (12) angeordnet,

- die Vorderseite des Druckelements hat einen Abschnitt (18), der gestützt in den Lagerabschnitt (11) des oberen Stützarms des Anschlusses (2) frei drehbar ist zwischen einer offenen Stellung, bei der der Gehäuseeinschub (13) an seiner rechten

Seite offen für den Einschub des flachen Kabels (c) ist, und einer geschlossenen Stellung, bei der der Gehäuseeinschub geschlossen ist, und das flache Kabel in Richtung des Kabelkontaktabschnittes (12) geschoben ist,

dadurch gekennzeichnet, daß
der vordere Endabschnitt des oben Stützarms (4) des Anschlusses (2) zusammen mit seinem Lagerabschnitt (11) in der Wandöffnung (14) der oberen Gehäusewand (7) angeordnet ist, so daß die obere Ecke (9A) des vorderen Endabschnitts des oberen Stützarms (4) höher angeordnet ist als die innere Oberfläche der oberen Gehäusewand (7).

2. Elektrischer Verbinder nach Anspruch 1,
dadurch gekennzeichnet, daß der Abschnitt (18) an der vorderen Seite des Druckelements als Lagerachse ausgebildet ist, mit seiner Rotationsachse (18A) in dem Lagerabschnitt (11) des oberen Arms (4) des Anschlusses (2) angeordnet ist und frei um die Rotationsachse (18A) zwischen der offenen und geschlossenen Position des Druckelements drehbar ist.

3. Elektrischer Verbinder nach Anspruch 1 oder 2,
dadurch gekennzeichnet, daß das Druckelement (15) einen Arbeitsabschnitt (16) an seiner Oberseite hat und eine Kerbe (17) an seiner gegenüberliegenden Seite hat; der Arbeitsabschnitt ist ein Abschnitt, um dem Druckelement eine Rotationskraft zu verleihen, so daß die Kerbe (17) Kontakt mit dem Endabschnitt (9) des oberen Arms des Anschlusses (2) in der geöffneten Stellung des Druckelements hat.

4. Elektrischer Verbinder nach Anspruch 3,
dadurch gekennzeichnet, daß der Abstand zwischen dem Boden (17A) der Kerbe (17) des Drukkelements (15) und der Rotationsachse (18A) der Lagerwelle (18) bei geöffneter Position des Drukkelements (15) derart ausgebildet ist, daß ein Teil des Bodens (17A) der Kerbe (17) sich mit einer Schulter (10) an dem oberen Stützarm (4) des Anschlusses (2) vereinigt.

5. Elektrischer Verbinder nach Anspruch 1,
dadurch gekennzeichnet, daß wenigstens einer der oberen und unteren Arme (4, 5) des Anschlusses (2) flexibel ist, so daß sein oberer und unterer Arm (4, 5) in den Gehäuseeinschub (3) einführbar sind und jeweils die innere Oberfläche der oberen und unteren Gehäusewand (7, 8) berühren.

6. Elektrischer Verbinder nach Anspruch 5,
dadurch gekennzeichnet, daß ein Abschnitt nahe bei dem vorderen Ende des unteren Arms (5) mit dem Kabelkontaktabschnitt (12) eine Neigung (5A) hat, die nach oben gerichtet ist.

7. Elektrischer Verbinder nach Anspruch 6
dadurch gekennzeichnet, daß der untere Arm (5) flexibler ist als der obere Arm (4).

8. Elektrischer Verbinder nach einem der vorstehenden Ansprüche,
dadurch gekennzeichnet, daß der obere Arm des Anschlusses mit Verbindungsvorsprüngen (4A, 4B) an der oberen Kante an dem Grundabschnitt versehen ist, so daß der Anschluß daran gehindert ist, aus dem Gehäuse (1) herauszugleiten, indem die Vorsprünge sich mit der inneren Oberfläche der oberen Gehäusewand (7) verbinden.

9. Elektrische Verbinder nach einem der vorstehenden Ansprüche,
dadurch gekennzeichnet, daß das vordere Ende des Druckelements (15) gegenüber dem Arbeitsabschnitt (16) als Druckabschnitt ausgebildet ist, so daß das Druckelement in seiner geschlossenen Stellung das flache Kabel (c) gegen den Kontaktabschnitt (12) preßt.

10. Verfahren zu Herstellung eines elektrischen Verbinders nach einem der Ansprüche 1 bis 5, mit den Schritten:

Einführung des Anschlusses (2) derart in den Gehäuseeinschub, so daß der obere Arm (4) und der untere Arm (5) jeweils von dem inneren Oberflächen der oberen und unteren Gehäusewand (7, 8) geführt werden, wobei der untere Arm (5) in Richtung des oberen Arms (4) ausgelenkt ist und dann zurück in seine ursprüngliche Gestalt gebracht wird bei einem Einschub bis zu einer vorbestimmten Stellung.

11. Verfahren zur Herstellung des elektrischen Verbinders nach Anspruch 6, mit den Schritten:

Schwenken des Anschlusses (2) nach unten, so dass ein abgeschrägter Teil des unteren Arms (5) parallel zu der inneren Oberfläche der unteren Gehäusewand (8) ist,
Einführung des Anschlusses (2), so daß der abgeschrägte Teil zu der inneren Oberfläche der unteren Gehäusewand geführt wird; und Vervollständigung der Einführung zu einer vorbestimmten Stellung mittels Freilassen das Schwenken des unteren Arms.

Revendications

1. Connecteur électrique pour insertion d'un câble plat

(c), comprenant :

- un boîtier parallélépipédique (1)

  ayant une paroi supérieure (7) et une paroi inférieure (8),
  les côtés intérieurs des dites parois supérieure et inférieure du boîtier définissant une fente de boîtier pour l'insertion du dit câble plat dans la dite fente de boîtier sur son premier côté (côté droit) du dit boîtier, la dite paroi supérieure du boîtier ayant une ouverture de paroi (14),
  au moins une borne (2) peut être insérée dans la dite fente de boîtier sur son autre côté (côté gauche) du dit boîtier,

- la dite borne ayant un bras supérieur de support de portée (4) et un bras inférieur de contact de câble (5),

  les côtés intérieurs des dits bras supérieur et inférieur définissant une fente de borne entre les dits bras pour recevoir l'extrémité avant du dit câble inséré dans la dite fente de boîtier,
  les côtés extérieurs des dits bras supérieur et inférieur de la dite borne ayant un contact avec les côtés intérieurs des dites parois supérieure et inférieure du boîtier,
  le dit bras inférieur de contact ayant, à sa partie d'extrémité avant, une région de contact de câble (12) et le dit bras supérieur de support de portée ayant une région de portée (11) à sa partie d'extrémité avant (9),

- un élément de pression (15) est placé dans la dite ouverture (14) de la dite paroi supérieure du boîtier, à l'opposé de la dite région de contact de câble (12),

  le côté avant du dit élément de pression ayant une partie (18) qui est supportée en rotation libre dans la dite région de portée (11) du dit bras de support supérieur de la dite borne (2), entre une position ouverte dans laquelle la dite fente de boîtier (13) sur son côté droit est ouverte pour insertion du dit câble plat (c) et une position fermée dans laquelle la dite fente de boîtier est fermée et le dit câble plat est poussé vers la dite région de contact de câble (12),

caractérisé en ce que

la partie d'extrémité avant du bras de support supérieur (4) de la dite borne (2), de même que sa région de portée (11), est placée dans la dite ouverture de paroi (14) de la dite paroi supérieure de boîtier (7) de sorte que le bord supérieur (9A) de la partie d'extrémité avant du bras de support supérieur (4) se trouve à un niveau plus élevé que la surface intérieure de la dite paroi supérieure de boîtier (7).

2. Connecteur électrique selon la revendication 1, **caractérisé en ce que** la dite partie (18) du côté avant du dit élément de pression est sous la forme d'un arbre de portée positionné de sorte que son axe de rotation (18A) se trouve dans la dite région de portée (11) du bras supérieur (4) de la dite borne (2), et elle peut pivoter librement autour des dits axes de rotation (18A) entre les positions ouverte et fermée du dit élément de pression.

3. Connecteur électrique selon la revendication 1 ou 2, **caractérisé en ce que** le dit élément de pression (15) comprend une région de manoeuvre (16) sur son côté supérieur et une rainure (17) sur son côté opposé, et la dite région de manoeuvre est une partie qui communique une force de rotation au dit élément de pression de sorte que la dite rainure (17) vient en contact avec la partie d'extrémité (9) du bras supérieur de la dite borne (2) dans la position ouverte de l'élément de pression.

4. Connecteur électrique selon la revendication 3, **caractérisé en ce que** la distance entre le fond (17A) de la rainure (17) du dit élément de pression (15) et l'axe de rotation (18A) du dit arbre de portée (18), dans la position ouverte du dit élément de pression (15), est fixée de sorte qu'une partie du fond (17A) de la dite rainure (17) vient en prise avec un épaulement (10) du bras de support supérieur (4) de la dite borne (2).

5. Connecteur électrique selon la revendication 1, **caractérisé en ce qu'**au moins un des dits bras inférieur et supérieur (4, 5) de la dite borne (2) est suffisamment souple pour que ses bras supérieur et inférieur (4, 5) puissent être insérés dans la dite fente de boîtier (3) reliant les surfaces intérieures des parois de boîtier supérieure et inférieure (7, 8), respectivement.

6. Connecteur électrique selon la revendication 5, **caractérisé en ce qu'**une portion proche de l'extrémité avant du bras inférieur (5) comportant la région de contact de câble (12) présente une inclinaison (5A) en pente vers le haut.

7. Connecteur électrique selon la revendication 6, **caractérisé en ce que** le bras inférieur (5) est plus souple que le bras supérieur (4).

8. Connecteur électrique selon une des revendications précédentes, **caractérisé en ce que** le dit

bras supérieur de la borne comporte des saillies d'enclenchement (4A, 4B) à l'endroit du bord supérieur de sa région de base de sorte que la borne est empêchée de glisser hors du dit boîtier (1) par enclenchement des dites saillies dans la surface intérieure de la paroi supérieure de boîtier (7).

9. Connecteur électrique selon une des revendications précédentes, **caractérisé en ce que** l'extrémité avant de l'élément de pression (15) à l'opposé de la dite région de manoeuvre (16) est sous la forme d'une région de pression de sorte que l'élément de pression dans sa position fermée presse le câble plat (c) vers la dite région de contact (12).

10. Procédé de fabrication du connecteur électrique selon une des revendications 1 et 5, qui comprend les étapes d'insertion de la dite borne (2) dans la dite fente de boîtier d'une manière telle que le dit bras supérieur (4) et le dit bras inférieur (5) sont guidés par les surfaces intérieures des dites parois de boîtier supérieure et inférieure (7, 8) respectivement, tandis que le dit bras inférieur (5) est fléchi vers le dit bras supérieur (4) puis fléchi en retour à sa forme initiale au moment de l'insertion à une position prédéterminée.

11. Procédé de fabrication du connecteur électrique selon la revendication 6, qui comprend les étapes : de basculement de la dite borne (2) vers le bas de sorte qu'une partie oblique du dit bras inférieur (5) soit parallèle à la dite surface intérieure de la dite paroi de boîtier inférieure (8) ; d'insertion de la dite borne (2) de sorte que la dite partie oblique soit guidée vers la dite surface intérieure de la dite paroi de boîtier inférieure ; et d'achèvement de la dite insertion à une position prédéterminée par relâchement du dit basculement du dit bras inférieur.

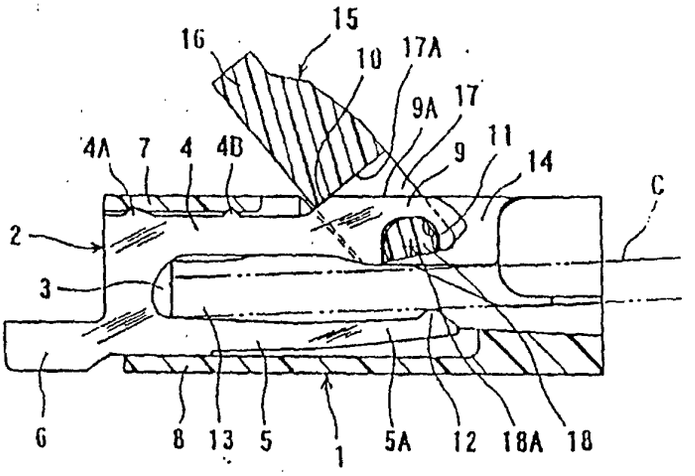

FIG. 1(A)

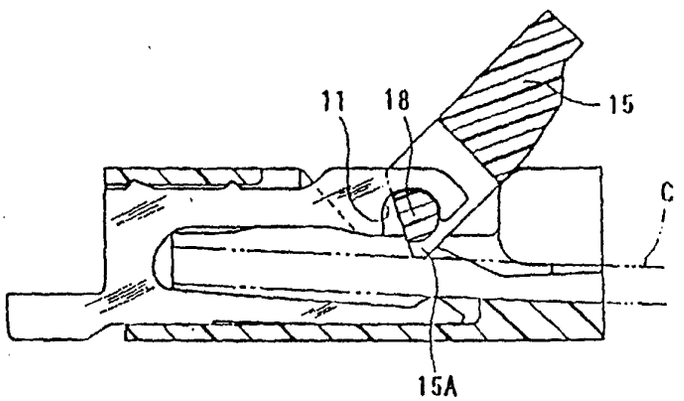

FIG. 1(B)

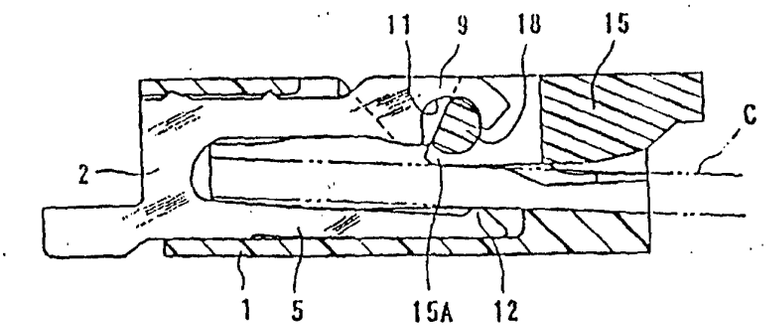

FIG. 1(C)

FIG. 2(A)

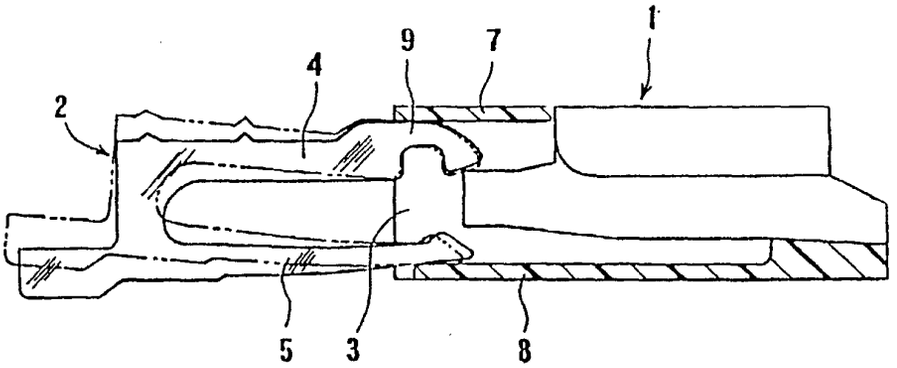

FIG. 2(B)

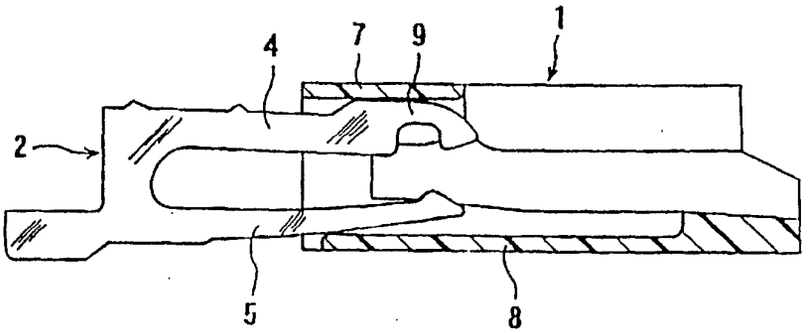

FIG. 2(C)

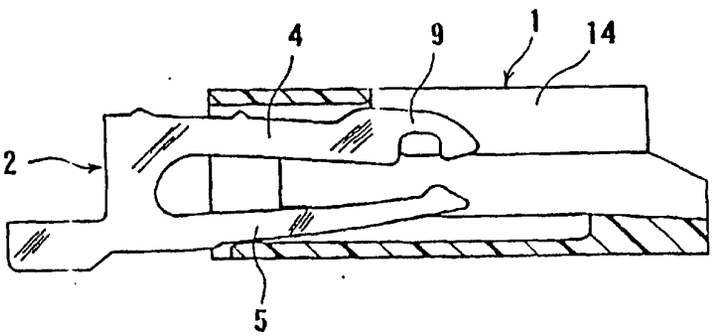

FIG. 2(D)

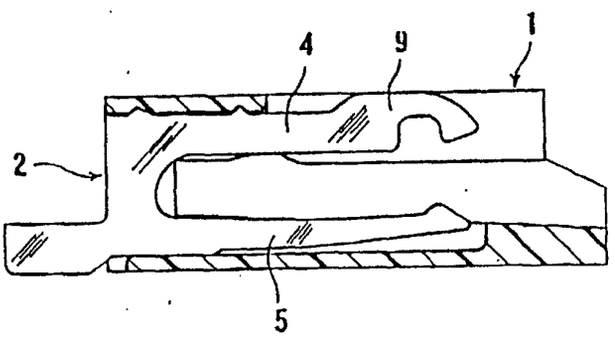

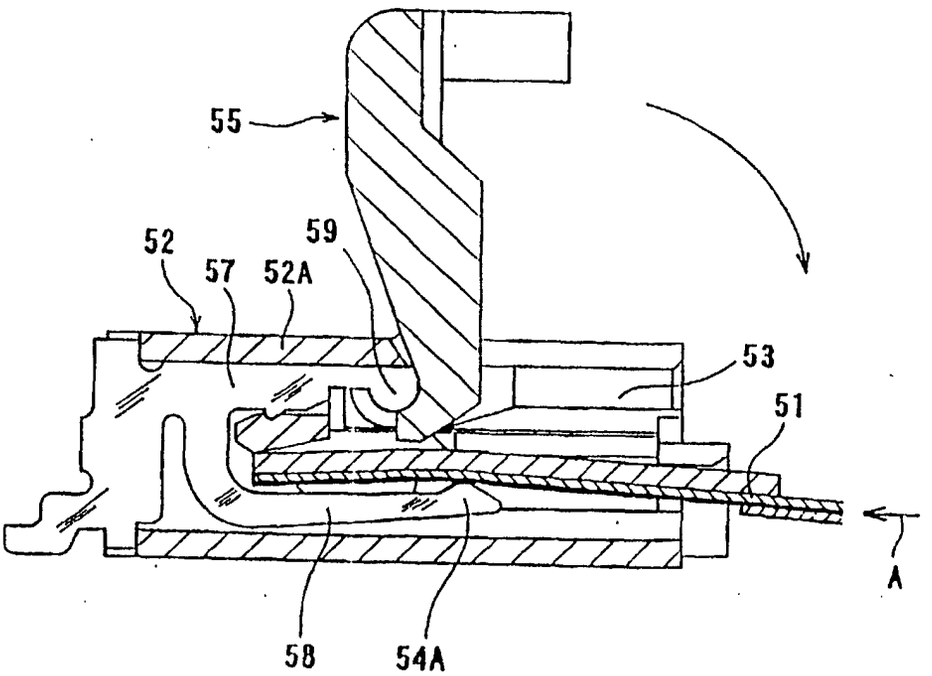

FIG. 3