United States Patent [19]

Anderka

[11] **3,734,633**

[45] **May 22, 1973**

[54] **TUBULAR WRITING POINT ESPECIALLY FOR AUTOMATIC DRAFTING MACHINES**

[75] Inventor: **Gerold Anderka**, Hamburg, Germany

[73] Assignee: **Koh-I-Noor Rapidograph Inc.**, Bloomsbury, N.J.

[22] Filed: **Feb. 22, 1971**

[21] Appl. No.: **117,617**

[30] **Foreign Application Priority Data**

Mar. 5, 1970 Germany ..... P 20 10 355.3
Apr. 30, 1970 Germany ..... P 20 21 153.4

[52] **U.S. Cl.** **401/259**
[51] **Int. Cl.** **B43k 1/10**
[58] **Field of Search** 401/258–260

[56] **References Cited**

UNITED STATES PATENTS

3,539,269	11/1970	Dahle	401/259
3,466,132	9/1969	Riepe	401/259
2,217,502	10/1940	Wallace	401/259
3,459,486	8/1969	Matschkal	401/259
3,561,880	2/1971	Bok	401/258

FOREIGN PATENTS OR APPLICATIONS

1,534,861	6/1968	France	401/258

Primary Examiner—Lawrence Charles
Attorney—David H. Semmes

[57] **ABSTRACT**

A tubular writing instrument, having a clearing wire with drop weight and being adapted for use in automatic drafting machines.

12 Claims, 5 Drawing Figures

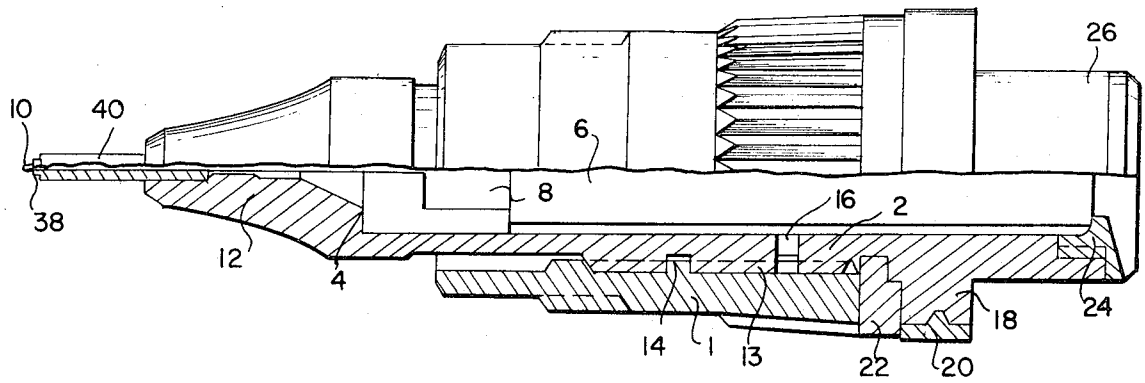

PATENTED MAY 22 1973

3,734,633

SHEET 1 OF 3

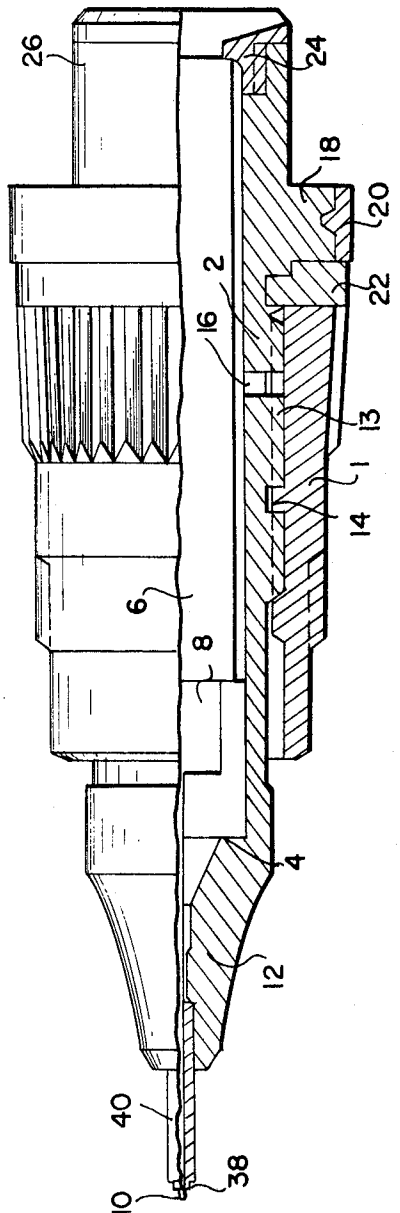

FIG. 1

INVENTOR
GEROLD ANDERKA

BY David H. Semmes

ATTORNEY

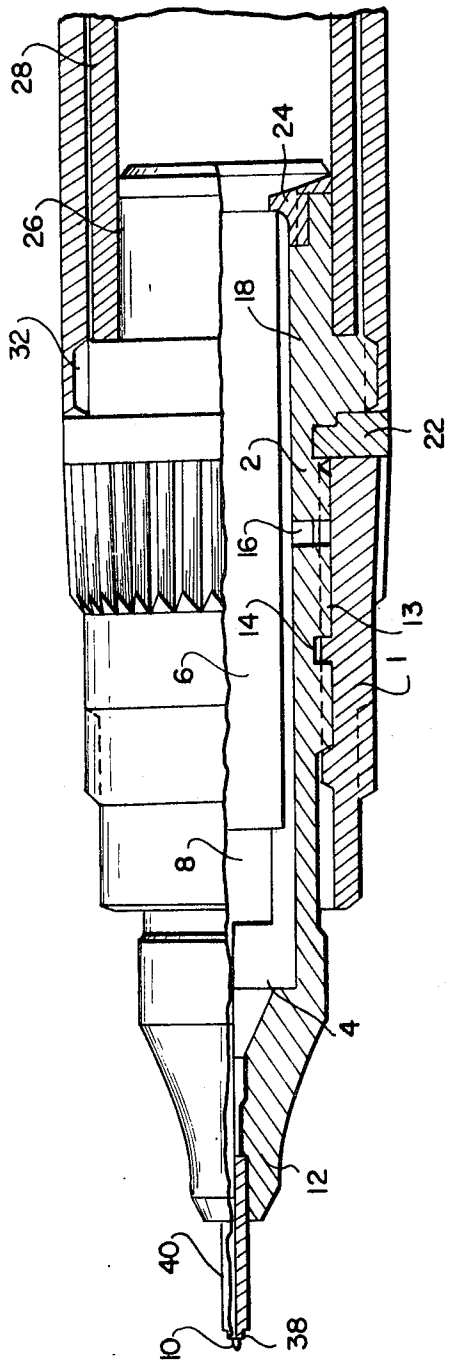

FIG. 2

INVENTOR
GEROLD ANDERKA

BY David H. Semmes

ATTORNEY

FIG. 3

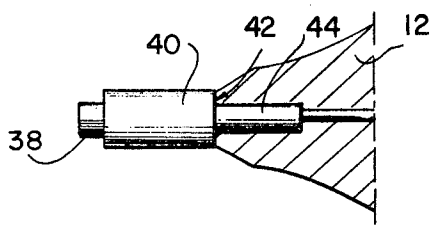

FIG. 4

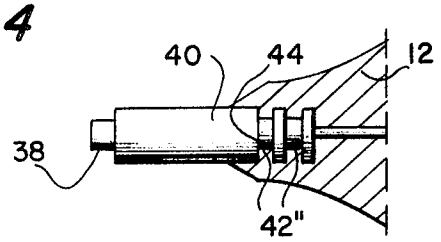

FIG. 5

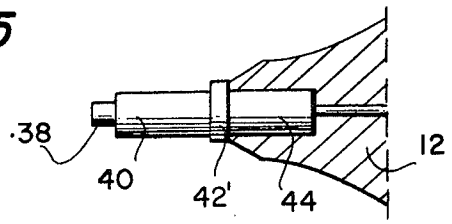

INVENTOR
GEROLD ANDERKA

BY David H Semmes

ATTORNEY

TUBULAR WRITING POINT ESPECIALLY FOR AUTOMATIC DRAFTING MACHINES

This invention relates to a tube writing instrument particularly for use in automatic drawing machines but also adapted to be used as a manual implement.

It has previously been proposed to provide a tube writing implement containing a cartridge for ink in a holder or a holder forming an ink reservoir, the implement comprising a cylindrical member which at one end forms a mount for the reception of a writing tube, and which contains an internal bore for the accommodation therein of a drop weight carrying a clearing wire, and a thread cut into the external wall of the cylindrical member to form a compensating chamber communicating with the internal bore through one or more radial ducts. Such tube writing implements have the defect that the thread forming the compensating chamber becomes blocked with deposits of ink which then prevent the cylindrical member from being easily unscrewed or extracted.

According to the present invention there is provided a tube writing implement, comprising a cylindrical member which at one end forms a mount for a writing tube, and which contains an internal bore for the reception of a drop weight carrying a clearing wire, a thread being formed in the external wall of the cylindrical member to form a compensating chamber communicating with the internal bore through one or more radial ducts, and a ring or sleeve having an internal screw thread screwable on a co-operating external screw thread formed on the cylindrical member in the region of the compensating chamber, the ring or sleeve being arranged to cover the compensating chamber.

By covering only the compensating chamber with such a ring or threaded sleeve, the threads of the compensating chamber can be exposed for cleaning simply by unscrewing the sleeve or ring, without the distance of the writing tube proper or of the cylindrical member from the drawing surface being changed.

Preferably an annular shoulder against which the ring or sleeve can abut is formed the cylindrical member rearwards of the compensating chamber. The position of the ring, when this is screwed tight, is thus precisely defined and a tight joint is formed.

In order to prevent the tube writing implement, when an attempt is made to unscrew the ring, from being screwed out of its holder instead of the ring or sleeve being unscrewed from the cylindrical member, by reason of the ring or sleeve being firmly stuck to the cylindrical member by hardened deposits of ink or, conversely the ring or sleeve from being unscrewed when an attempt is made to unscrew the tube writing implement from its holder, it is desirable that the hand of the threads for screwing the tube writing implement to its holder should be contrary to the hand of the external thread in the region of the compensating chamber. Preferably the external thread in the region of the compensating chamber is a left-hand thread.

In such an arrangement it is then possible, as desired, either to unscrew the ring or sleeve from the cylindrical member or the entire tube writing implement from its holder, and to avoid both these events taking place at the same time. For instance, when it is desired to unscrew the ring or sleeve from the cylindrical member, the appropriate rotation of the ring or sleeve results in the rest of the tube writing implement being turned even more tightly into its holder instead of being unscrewed together with the ring or sleeve. Conversely, unscrewing of the tube writing implement from its holder results in the ring or sleeve being even more securely tightened on the cylindrical member.

Since normally the tube writing implement will be more frequently unscrewed from its holder than the ring or sleeve from the cylindrical member for cleaning the compensating chamber, the threads for securing the tube writing implement to its holder are preferably right-hand threads so that the user can secure and unscrew the tube writing implement by screwing in the generally conventional hand of rotation.

Moreover, in tube writing implements used in automatic machines, it is desirable to fit the annular shoulder with or to embed in the same a concentric metal ring. The purpose of this metal ring is to guide and centrally to align the entire tube writing implement radially in the holder of the automatic drawing machine.

For the purpose of centring the writing tube in automatic drawing machines, the tube is preferably designed to merge into a cylindrical metal shoe which has a radius that exceeds the radius of the tube, and which is formed with projections or with a peripheral axial face for supporting the same axially in a tapering forward part of the cylindrical member.

The feature that the metal shoe, irrespective of the radius of the writing tube, has a particular radius for its abutting face, facilitates adjustment in the lower region of the tube writing implement and avoids the necessity for readjustment each time a writing tube for a different line thickness is to be used. Moreover, the fact that the metal shoe has projections or a peripheral axial face is a matter of importance in automatic drawing machines. Generally, the writing tube has, in the past, been inserted without a change in section into the tapering part, i.e. the conical forward end, of the cylindrical member. Owing to the relatively heavy jolt of application of the writing tube to the paper in automatic drawing machines, the point of the writing tube may be axially shifted, so that an axial butt face can provide support by bearing against the cylindrical member and prevent axial displacement. Furthermore, for improving the axial location of the writing tube, the cylindrical end of the tube extending into the tapering end may be formed with one or more peripheral slots.

In the present tube writing implement ink is supplied either from an ink cartridge which is fitted onto a cylindrical extension of the cylindrical member to the rear of the annular shoulder that may carry a centring ring, or an external thread may be formed on or to the rear of the annular shoulder for the screw attachment thereto of a holder forming an ink reservoir or containing such a reservoir. Both forms of construction can be adopted for tube writing implements used in automatic drawing machines or for normal tube writing pens for manual drawing.

Finally it may be desirable to fit or screw into the rear end of the internal bore which serves as an ink chamber, a ring having an internal diameter that is smaller than that of the drop weight. This ring will then prevent the drop weight from falling out.

In order to enable the invention to be more readily understood, reference will now be made to the accompanying drawings, which illustrate diagrammatically and by way of example some embodiments thereof, and in which:

FIG. 1 is a part longitudinal section through a tube writing implement fitted with a ring that covers a compensating chamber and having an annular shoulder carrying a centring ring,

FIG. 2 is a section similar to that shown in FIG. 1, of a tube writing implement in which an annular shoulder bears threads for the screw attachment thereto of a holder,

FIG. 3 is a detail showing the construction of a mount for a writing tube and a metal shoe,

FIG. 4 is a view similar to FIG. 3 of an embodiment in which a writing tube mount is formed with internal circumferential slots, and

FIG. 5 is a detail similar to FIG. 3 of an embodiment in which an annular axial face is differently formed.

Referring now to FIGS. 1 and 2, there is shown in each of these FIGS. a tube writing implement comprising a cylindrical member 2 having an axial bore 4 containing a drop weight 6. The latter has a reduced forward end 8 which carries a clearing wire 10. The forward end 12 of the cylindrical member 2 is of conical tapering configuration, and the member is formed with a thread 14 which serves as a compensating chamber and which communicates with the internal bore 4 through radial ducts 16. In proximity with the compensating chamber 14, an external thread 13 is provided for a ring 1 having a corresponding internal thread to be screwed on the cylindrical member 2. The ring 1 cannot be screwed on the cylindrical member 2 further than into contact with an annular shoulder 18 of the cylindrical member or an interposed ring 22. In tube writing implements intended for automatic drawing equipment a metal ring 20 (FIG. 1) is inserted or cast onto this annular shoulder 18, the metal ring being precision machined so that it is in exact concentric axial alignment. An intermediate ring 22 which may bear a color code may be located on the front face of the annular shoulder 18.

The rear end of the cylindrical member 2 is open to a main ink reservoir, for instance to a cartridge 28 (FIG. 2) containing Indian ink and mounted on a cylindrical extension 26 of the member 2. In order to prevent the drop weight 6 from falling out, the opening into the cylindrical bore may be constricted by the insertion of a ring 24 which has an internal diameter less than the external diameter of the drop weight and which also serves as a stop for retraction of the drop weight to control the flow of ink.

If desired, external threads 32 may be provided to the rear of the annular shoulder on the extension 26 or, as shown in FIG. 2, on the annular shoulder 18 itself for the affixation thereto of a barrel 5 that is conventional in ordinary hand-held pens. If such a barrel is provided, the presence of the ink cartridge 28 is not essential, since the barrel may be arranged to serve as an ink reservoir.

In the embodiment shown in FIG. 2, the threads 32 and the external threads 13 may be of opposite hand. For example, if the threads 32 are right-handed and the external threads 13 are left-handed then the entire tube writing implement can be screwed into the barrel and screwed out of the barrel in the normal direction of rotation.

For instance, when it is desired to remove the tube writing implement from the barrel 5, then this would be done by anticlockwise rotation (as viewed from the end 38 of the writing tube). This hand of rotation is the same as the direction of rotation for screwing the ring 1 tight, this ring having a left-handed thread. Hence the latter will not be slackened off when the tube writing implement is unscrewed from the barrel 5. The same naturally also applies to the unscrewing of the ring, which is accomplished by turning it in the direction in which the tube writing implement is screwed into the barrel.

Screw threads 7 for mounting a protective cap (not shown) are preferably right-handed if the external threads 13 are left-handed. This prevents the ring from being slackened off when the protective cap is removed.

The writing tube merges into a metal shoe 40 which is inserted into the tapering forward end 12 of the cylindrical member 2. In order to prevent the continuous shocks experienced in automatic drawing machines when the pen is suddenly dropped on the sheet from displacing the writing tube 38 and its shoe 40, the latter is formed with an axial abutment face 42 which bears against the conically tapering forward end 12 of the cylindrical member. This may be arranged as is shown in FIG. 3, where the shoe 40 has a larger diameter than the end 44 extending into the tapering end 12. An annular abutment face 42 is thus formed which bears against the front face of the tapering forward end 12. Alternatively the arrangement may be as illustrated in FIG. 4 where annular slots 42'' provide the necessary safety device for preventing axial displacement of the shoe of which part is moulded into the tapering forward end 12. Finally, another alternative is that shown in FIG. 5 in which the shoe is integrally formed with a collar 42' which similarly serves the desired purpose.

What we claim is:

1. A tube writing implement comprising:
   - A. a cylindrical member forming at one end thereof a writing tube mount;
   - B. a writing tube in said tube mount;
   - C. an internal bore in said cylindrical member;
   - D. a drop weight in said cylindrical bore and mounting thereon a clearing wire operatively extending in said writing tube;
   - E. a thread in the external wall of said cylindrical member forming a compensating chamber, and radial ducts intercommunicating said thread and the internal bore;
   - F. said cylindrical member having an external screw thread over the area of said compensating chamber;
   - G. an internally screw threaded sleeve removably engaged on said external screw thread and covering said compensating chamber;
   - H. said cylindrical member having external ink reservoir mounting threads on the end thereof opposite the writing tube mount; and
   - I. an ink reservoir operatively removably associated with said ink reservoir mounting threads.

2. A tube writing implement as claimed in claim 1, wherein an annular shoulder, against which the sleeve can abut, is formed on the cylindrical member to the rear of the compensating chamber.

3. A tube writing implement as claimed in claim 2, wherein a concentric metal ring is fitted on the annular shoulder.

4. A tube writing implement as claimed in claim 1, wherein the writing tube merges into a cylindrical metal shoe having a radius that exceeds the radius of

the tube, and said shoe having an annular projection to prevent the shoe from being axially displaced inside a tapering part of the cylindrical member.

5. A tube writing implement as claimed in claim **4**, wherein the shoe of the writing tube is formed with peripheral annular slots for preventing axial displacement.

6. A tube writing implement as claimed in claim **5**, wherein the writing tube together with its shoe is moulded into the tapering part of the cylindrical member.

7. A tube writing implement as claimed in claim **2**, wherein rearwards of the annular shoulder the cylindrical member has a cylindrical extension for attachment thereto of an ink cartridge.

8. A tube writing implement as claimed in claim **1**, wherein the cylindrical member is formed with threads for screwing the tube writing implement into a holder.

9. A tube writing implement as claimed in claim **8**, wherein the hand of the threads for screwing the tube writing implement to a holder is contrary to the hand of the external thread in the region of the compensating chamber.

10. A tube writing implement as claimed in claim **9**, wherein the external threads are left-hand threads.

11. A tube writing implement as claimed in claim **3**, wherein an intermediate ring is provided between the annular shoulder and sleeve.

12. A tube writing implement as claimed in claim **1**, wherein a ring having an internal diameter smaller than the diameter of the drop weight is tightly fitted into the rear end of the internal bore which serves as an ink chamber and serves as a stop for retraction of said drop weight.

* * * * *