(No Model.)

3 Sheets—Sheet 1.

H. R. ROBERTSON.

LOG RAFT CONSTRUCTION.

No. 590,279. Patented Sept. 21, 1897.

Fig. 1.

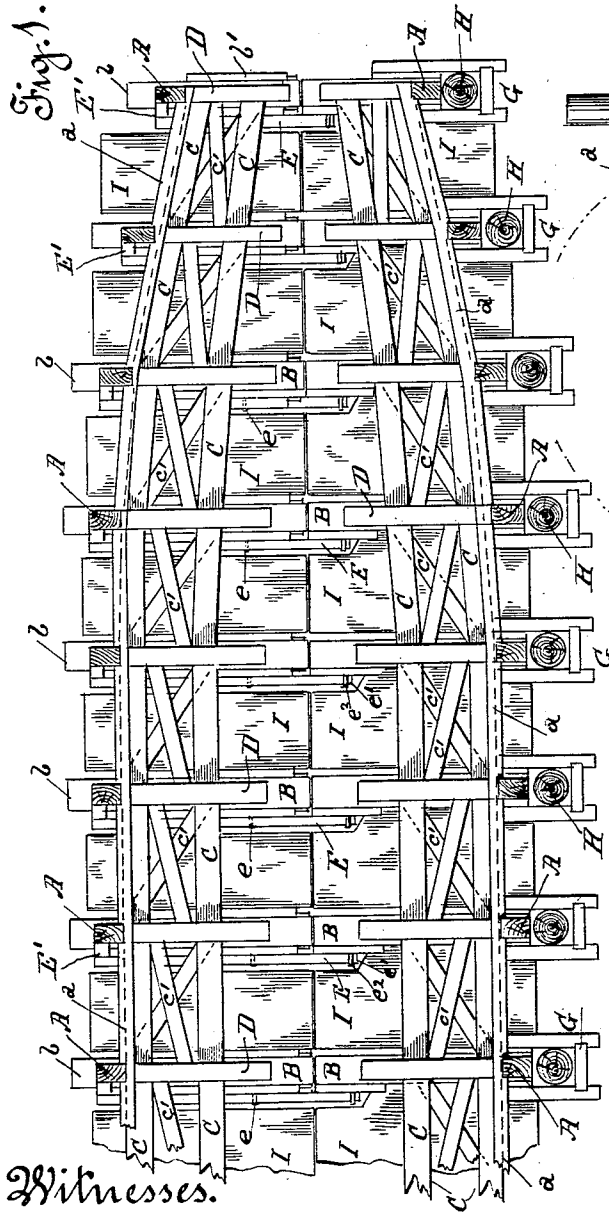

Fig. 2.

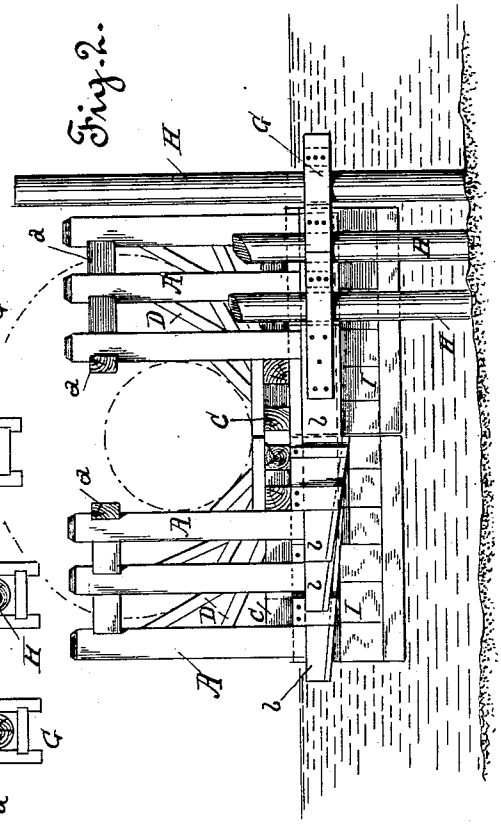

Fig. 3.

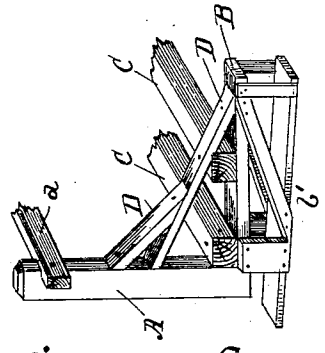

Witnesses.

F. A. Monteverde.

Walter Vane.

Inventor.

Hugh Roderic Robertson

by Wm F. Booth

his Attorney

THE NORRIS PETERS CO., PHOTO-LITHO., WASHINGTON, D. C.

(No Model.) 3 Sheets—Sheet 2.

H. R. ROBERTSON.

LOG RAFT CONSTRUCTION.

No. 590,279. Patented Sept. 21, 1897.

Fig. 4.

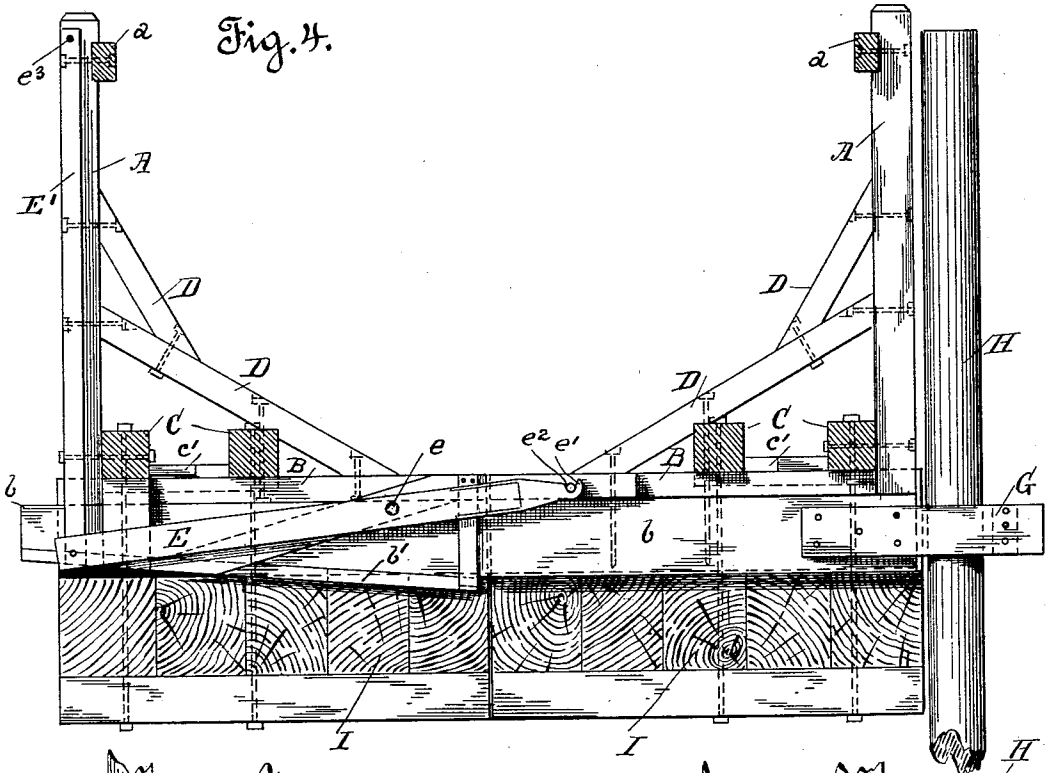

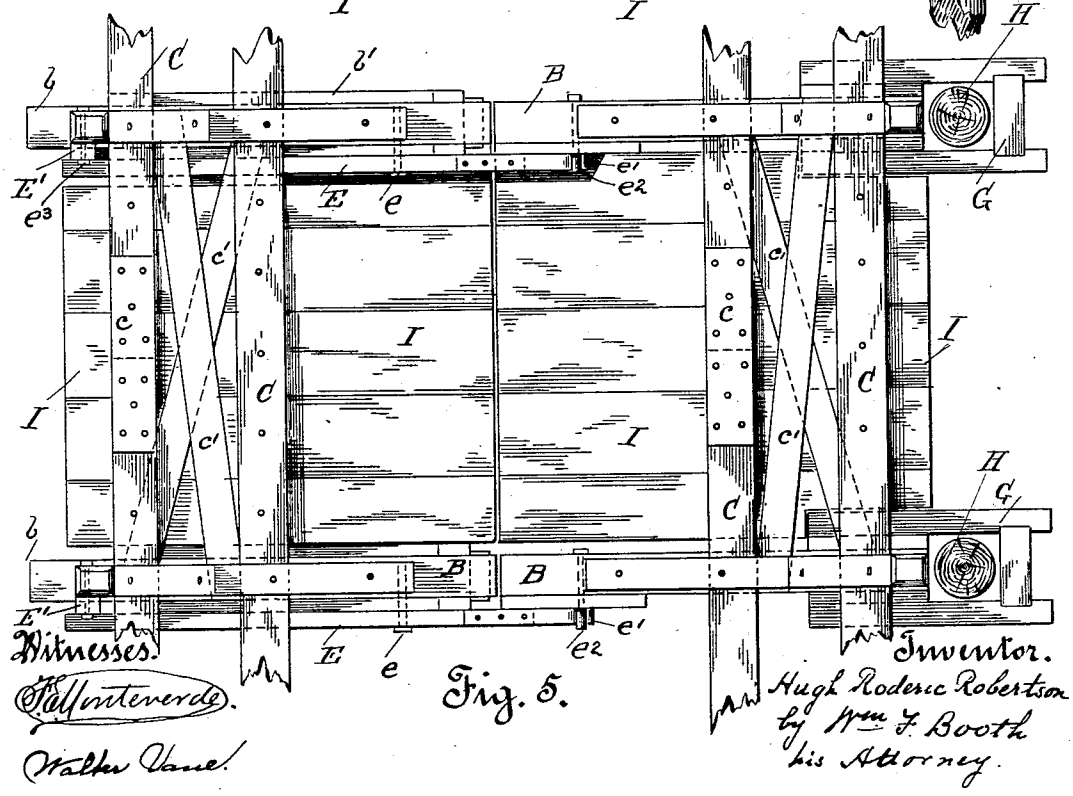

Fig. 5.

Witnesses.
Walter Vane.

Inventor.
Hugh Roderic Robertson
by Wm. F. Booth
his Attorney.

THE NORRIS PETERS CO., PHOTO-LITHO., WASHINGTON, D. C.

(No Model.) 3 Sheets—Sheet 3.

H. R. ROBERTSON.

LOG RAFT CONSTRUCTION.

No. 590,279. Patented Sept. 21, 1897.

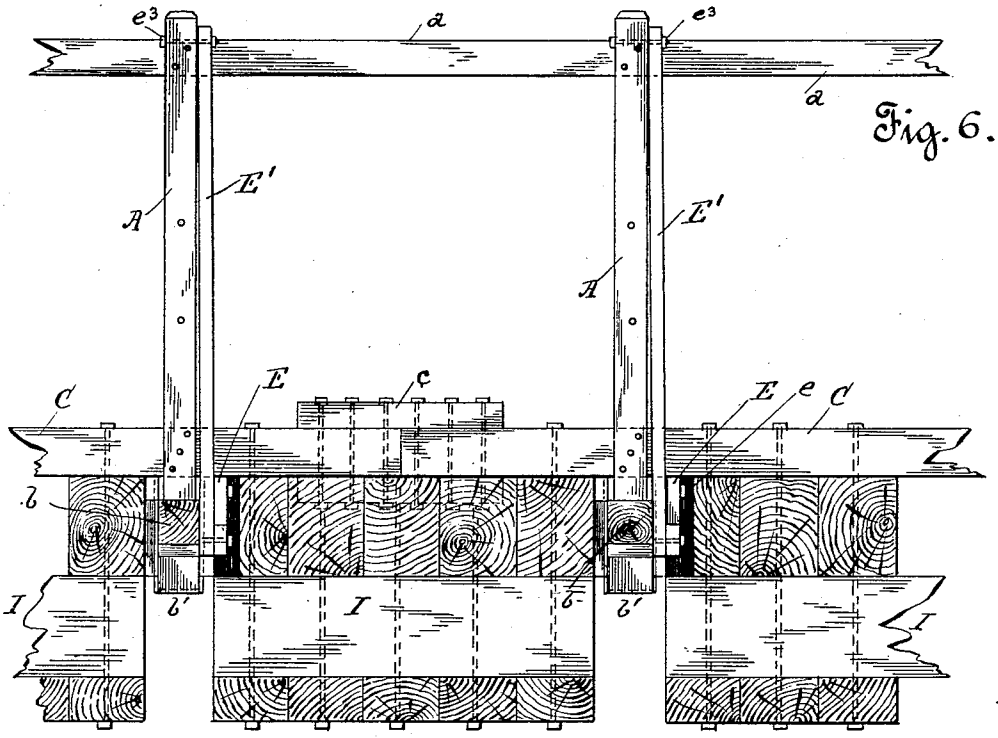

Fig. 6.

Witnesses.

F. E. Monteverde.

Walter Vaud.

Inventor.

Hugh Roderic Robertson

by Wm. F. Booth

his Attorney.

THE NORRIS PETERS CO., PHOTO-LITHO., WASHINGTON, D. C.

UNITED STATES PATENT OFFICE.

HUGH R. ROBERTSON, OF ALAMEDA, CALIFORNIA.

LOG-RAFT CONSTRUCTION.

SPECIFICATION forming part of Letters Patent No. 590,279, dated September 21, 1897.

Application filed March 15, 1897. Serial No. 627,475. (No model.)

To all whom it may concern:

Be it known that I, HUGH RODERIC ROBERTSON, a citizen of Canada, residing at Alameda, in the county of Alameda and State of California, have invented certain new and useful Improvements in Log-Raft Construction; and I do hereby declare the following to be a full, clear, and exact description of the same.

My invention relates to log-rafts such as are constructed of a great number of logs and other timber or lumber laid up together and fashioned to form as a whole a readily manipulated and towable mass, bundle, or structure securely held together and capable of withstanding the elements in its journey along the coast or elsewhere to its destination. The general character of such rafts will be seen by reference to my former patents, No. 338,104, dated March 16, 1886, and No. 392,691, dated November 13, 1888; and my present invention consists in certain improvements in the construction of the cradle necessary to support the raft during formation, to fashion it to shape, and finally to launch it easily and safely.

These improvements have for their objects economy in time, labor, and material during construction, ease of manipulation both in building and fashioning and in launching, and increased security and safety in the raft itself during transportation.

Referring to the accompanying drawings, Figure 1 is a plan of a portion of the cradle. Fig. 2 is an end view. Fig. 3 is a perspective detail showing the sheath-socket of one section of the cradle. Fig. 4 is an end view showing the locking mechanism for the two sections. Fig. 5 is a plan of one portion of the cradle between uprights. Fig. 6 is a side view of a portion of the cradle.

The cradle may be said to consist of two main parts—namely, the body portion and the float portion.

The body portion is composed of two parts or sections divided through the longitudinal center, as seen in Figs. 1, 4, and 5. Each half or section comprises the uprights A at intervals, the horizontal transverse timbers B, their inner ends approaching at the longitudinal center, and the longitudinal stringers C on the timbers B, said stringers being bolted together by top and bottom splices *c*, as seen in Figs. 5 and 6, to form, practically, a continuous line throughout the length of the raft. These parts are all securely bolted together. Inclined braces D extend from the timbers B to the uprights A, and these are arranged to give form or fashion to the mass of logs piled into the cradle and to shape the ultimate raft both in transverse and longitudinal section. Horizontal crossing-braces *c'*, Figs. 1 and 4, extend between and are securely bolted to the stringers C. Tie-stringers *a* are let into the upper ends of the uprights A to better hold them together.

Underneath each horizontal timber B of one half or section of the cradle-body is securely bolted what may be termed a "tongue-plate" *b*, Figs. 2 and 4. Its inner end is somewhat beveled or tapered and is adapted to slidingly fit a sheath-socket *b'*, Figs. 3 and 4, formed of suitable plates and straps under and secured to the horizontal timbers B of the other half of the cradle-body. Thus by the fitting of the several tongue-plates of one half or section into the several sheath-sockets of the other half or section the divided body is held well together and steadied and is adapted to be readily separated into its parts when the occasion demands.

In order to lock the halves or sections of the cradle-body and hold them together while being filled with the logs, timbers, or lumber to form the raft, there is pivoted at *e*, Figs. 4 and 5, to the side of each sheath-socket *b'* a locking-lever E, the inner extremity of which is formed or provided with a hook *e'*, which is adapted to engage from below a pin e^2, secured in the timbers B. From the outer extremity of each lever E extends upwardly a handle E' beside an upright A, and said handle is removably secured to the upright by means of a bolt e^3, Figs. 4, 5, and 6. When the handles E' are all fastened, the locking-levers E are held rigidly and the halves or sections of the cradle-body are securely held together; but when the raft is complete and is ready to be launched the handles E' are released and pulled up, whereby the levers E remove their hooks *e'* from the fixed pins e^2, thereby unlocking the sections, which separating along the median longitudinal line launch the raft. One section of the cradle-

body is to be anchored in suitable manner. The means here shown are as follows: The uprights on one side are provided with sockets or boxes G, which play freely upon piles H, thus anchoring the cradle and at the same time permitting it to rise and fall, as necessary, with the tide. In the separation of the sections to launch the raft it is the unanchored section which when the two are unlocked is pulled away to let the raft down between them.

The float portion of the cradle may be pontoons or other floating supports, but the best construction is that here shown, consisting of a plurality of heavy timbers I in layers, one layer being at right angles or crosswise of the adjacent ones. These timbers are in two sections, Fig. 4, corresponding to the two sections of the cradle-body, and each float-section is bolted securely to its corresponding body-section. This float-support will be buoyant enough to support the cradle-body sufficiently high out of the water to permit easy and efficient work in the construction of the raft.

In forming the raft the logs, timbers, or other lumber are laid in continuously in the cradle between its braces and are made to assume the cylindrical or tapering shape of my old rafts.

Having thus described my invention, what I claim as new, and desire to secure by Letters Patent, is—

1. In log-raft construction, a floating cradle, composed of separable sections, and means for holding said sections together while the raft is building, and releasing them, whereby they may separate, to launch the raft.

2. In log-raft construction, a floating cradle, composed of separable sections, each section comprising suitable horizontal pieces, uprights, and intervening inclined braces, to give shape or form to the raft, and means for holding said sections together while the raft is building, and releasing them, whereby they may separate, to launch the raft.

3. In log-raft construction, a floating cradle, composed of separable sections, and means for holding the sections together and steadying them, consisting of the tongue-plates on one section, and the sheath-sockets on the other section, into which the tongue-plates slidingly fit.

4. In log-raft construction, a floating cradle, composed of separable sections, and means for detachably locking said sections together, consisting of the pivoted locking-levers, on one section, having hook ends, the fixed pins in the other section, with which the hook ends of the levers engage, and the handles for operating the locking-levers.

5. In log-raft construction, a floating cradle, composed of separable sections, means for holding the sections together and steadying them, consisting of the tongue-plates on one section, and the sheath-sockets on the other section, into which the tongue-plates slidingly fit, and the means for detachably locking said sections together, consisting of the pivoted locking-levers, on one section, having hook ends, the fixed pins in the other section, with which the hook ends of the levers engage, and the handles for operating the locking-levers.

6. In log-raft construction, a floating cradle composed of separable sections, and provided with means for detachably holding or locking them together, each section comprising uprights, horizontal timbers, longitudinal stringers, and inclined braces to give form or shape to the raft.

7. In log-raft construction, a floating cradle, composed of separable sections, provided with means for detachably holding or locking them together, one of said sections being free, and the other anchored by suitable means.

8. In log-raft construction, a floating cradle, composed of separable sections, provided with means for detachably holding or locking them together, one of said sections being free, and the other anchored by means of sliding boxes to fixed piles.

9. In log-raft construction, a cradle composed of a body portion, comprising separable sections, provided with means for detachably holding or locking them together, each section comprising suitable uprights, horizontal timbers and forming or shaping braces, and a float portion, in separate sections, corresponding to and adapted to support the sections of the body portion.

10. In log-raft construction, a cradle composed of a body portion, comprising separable sections, provided with means for detachably holding or locking them together, each section comprising suitable uprights, horizontal timbers and forming or shaping braces, and a float portion in separate sections corresponding to and adapted to support the sections of the body portions, said float portion being formed of timbers, in a plurality of layers, one layer lying crosswise of those adjacent.

In witness whereof I have hereunto set my hand.

HUGH R. ROBERTSON.

Witnesses:
WALTER VANE,
L. A. GIBBONS.