Feb. 2, 1965 W. T. SORENSON 3,168,612

MOUNTING ADAPTERS FOR SWITCH CASES

Filed Oct. 10, 1962 2 Sheets-Sheet 1

Fig. 1.

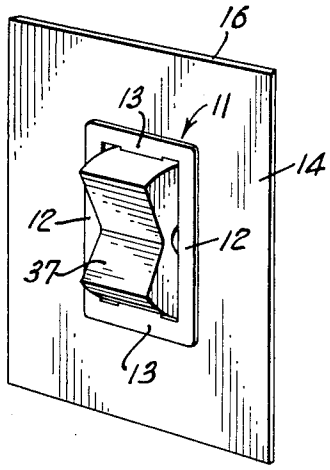

Fig. 2.

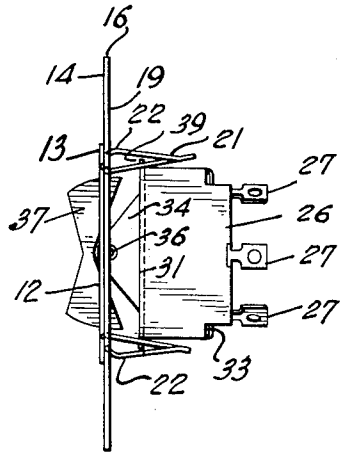

Fig. 3.

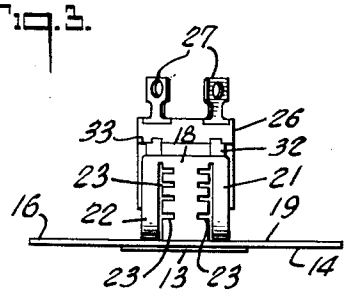

Fig. 4.

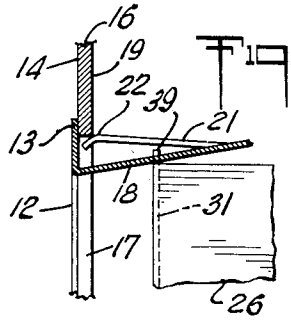

Fig. 5.

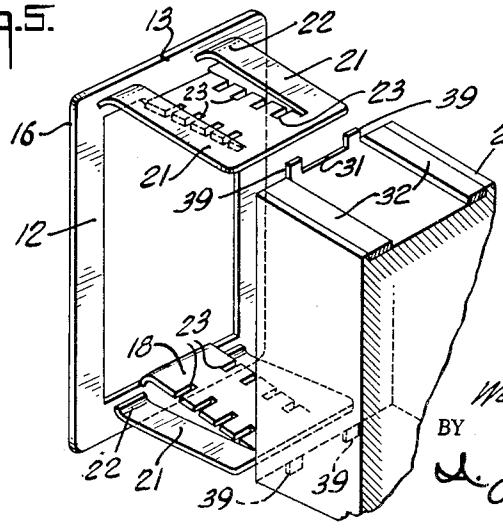

INVENTOR.
WESLEY T. SORENSON
BY
L. Julian Krenick
ATTORNEY

Feb. 2, 1965 W. T. SORENSON 3,168,612

MOUNTING ADAPTERS FOR SWITCH CASES

Filed Oct. 10, 1962 2 Sheets-Sheet 2

Fig. 6.

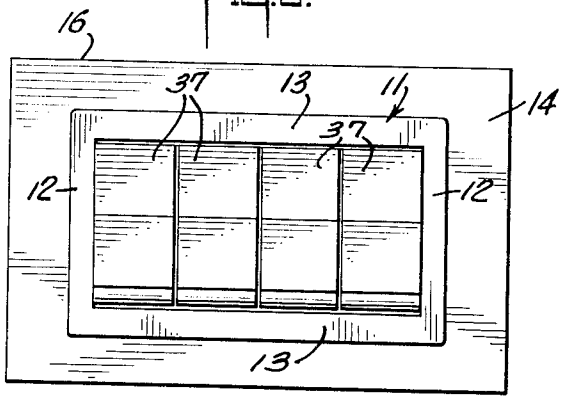

Fig. 7.

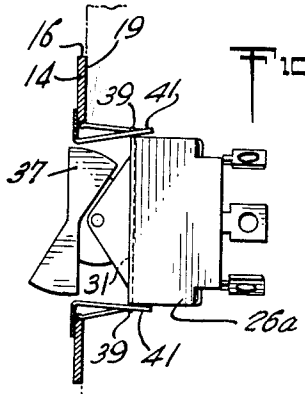

Fig. 8.

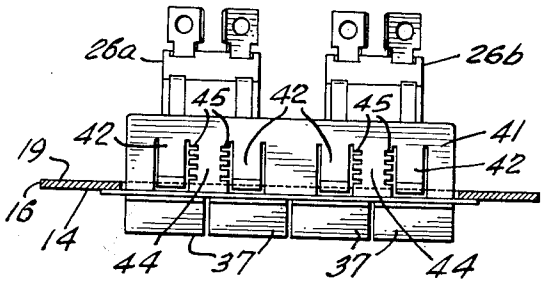

Fig. 9.

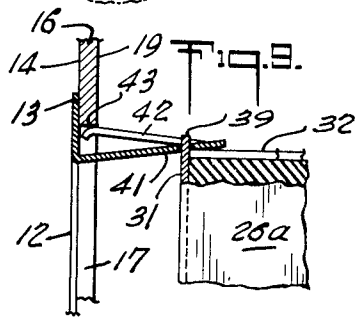

Fig. 10.

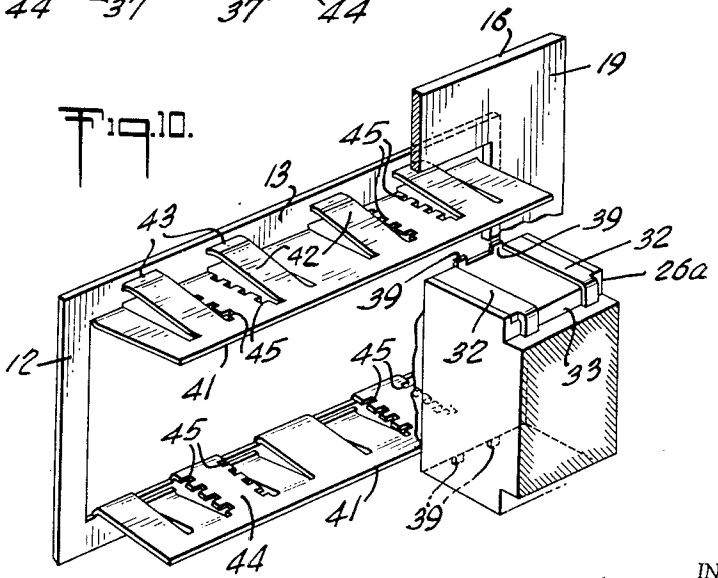

INVENTOR.
WESLEY T. SORENSON
BY
A. Jordan Yemick
ATTORNEY

United States Patent Office 3,168,612 Patented Feb. 2, 1965

3,168,612

MOUNTING ADAPTERS FOR SWITCH CASES

Wesley T. Sorenson, West Hartford, Conn., assignor to Carling Electric, Inc., West Hartford, Conn., a corporation of Connecticut

Filed Oct. 10, 1962, Ser. No. 229,652
9 Claims. (Cl. 174—57)

This invention relates to mounting elements and more particularly to adapters for attaching electric switch cases to mounting plates.

According to the present invention, there is provided a means for attaching an electrical switch case and its associated button actuator by snap action to a mounting plate, said means comprising a unitary sheet metal element which has been blanked to provide support components and resilient snap components which form an assembly with the switch case.

Means are provided on the adapter for accommodating the switch case in any one of several different locations on the adapter so that the case may be placed in a desired position relative to the mounting plate. Thus, the adapter may be utilized for switch cases and their associated actuator buttons which have different sizes and shapes.

Certain portions of the adapter are blanked into spring elements which not only perform the function of supporting the switch case and adapter assembly in position upon the mounting plate, but also act to enhance the connection between the adapter and the switch case so that the latter is secured firmly in position.

Furthermore, the blanking of the unitary piece of sheet metal in the manner described hereinafter also brings about the formation of an integral flange which lies flush against the outer face of the mounting plate so that the switch button extending therethrough is surrounded with an ornamental frame.

All of the characteristics of the adapter described hereinabove and hereafter are achieved by the blanking and forming of the various cooperating and functioning elements from a single piece of sheet metal or the like whereby the resulting simple and inexpensive device is capable of the multiple functions that are required to be performed.

Still other objects and advantages of the invention will be apparent from the specification.

The features of novelty which are believed to be characteristic of the invention are set forth herein and will best be understood, both as to their fundamental principles and as to their particular embodiments, by reference to the specification and accompanying drawings, in which:

FIGURE 1 is a perspective view of a face portion of a switch mounting plate with a portion of the adapter element of the present invention shown surrounding a typical electric switch button;

FIG. 2 is a side view of the device shown in FIG. 1;

FIG. 3 is a top view of the device shown in FIG. 1, some parts being omitted;

FIG. 4 is a greatly enlarged fragmentary view of the device shown in FIG. 2;

FIG. 5 is a greatly enlarged exploded perspective rear view of the snap-inadapter together with a fragmentary portion of a switch case;

FIG. 6 shows the front elevation of a snap-in adapter mounted in a switch plate and supporting a plurality of switch buttons, said adapter being another embodiment of the present invention;

FIG. 7 is a side view of the device shown in FIG. 6;

FIG. 8 is a top view of the device shown in FIG. 7;

FIG. 9 is a greatly enlarged fragmentary view of a portion of FIG. 7; and

FIG. 10 is a greatly enlarged perspective exploded rear view of the snap-in adapter shown in FIGS. 6 through 9.

In its preformed condition, a snap-in adapter of the present invention is constituted of a rectangular piece of metal, such as steel, brass, aluminum or the like, which is blanked and formed, usually in a single operation, into a device having a flat rectangular frame portion, generally designated **11**, comprising spaced apart side flanges **12** and spaced apart end flanges **13**. The flanges lie flat against the outer surface **14** of a switch mounting plate **16**. FIGS. 1 through 5.

Extending rearwardly through a rectangular aperture **17** in plate **16** are spaced apart bracket elements **18**, each formed integrally with a respective flange **13**.

Brackets **18** extend rearwardly of the rear face **19** of plate **16** for a considerable distance and at their respective outer end portions there is integrally formed by blanking or otherwise, a pair of forwardly extending spaced apart spring elements **21**, whose free ends are arcuately formed into bows **22** which are extended outwardly from the respective planes of brackets **18**. Each bracket **18** and its pair of spring elements **21** have an aggregate width which is very nearly the width between the inner edges of flanges **12** forming the space from which said brackets and springs have been blanked out. Both lateral edges of each bracket element **18** have an array of spaced apart slots or notches **23**, each of the notches along one edge of a bracket being aligned with a corresponding notch on the other edge.

The switch that is to be mounted on switch plate **16** by means of the adapter comprises a rectangular case **26** molded or otherwise formed of nylon, Bakelite or the like. Case **26** has a plurality of terminals **27** extending from the bottom thereof. Mounted on the top and enclosing the interior of case **26** is a sheet metal plate **36**, each end of which has a pair of integral spaced apart arms **32** extending over the opposite sides of said case. The ends of arms **32** are bent inwardly and engage shoulders **33** on case **26** to retain plate **31** in position. FIG. 2.

Plate **31** has a pair of spaced apart, upwardly extending integrally formed brackets **34** which support pin **36** on which switch button **37** is pivotally mounted for manual actuation of the electrical elements inside case **26**. At the juncture between the top and each side of case **26**, plate **31** has a pair of short, outwardly extending spaced apart, integrally formed lugs **39** which are adapted to engage a corresponding pair of notches **23** in bracket **18**.

In operation, the switch assembly, including case **26**, plate **31** and button **37**, is first mounted upon the adapter by the insertion of pairs of lugs **39** into repesctive pairs of notches **23** in opposite brackets **18**. The size and the depth of a particular case **26** and its spatial relation with button **37** will determine which pairs of notches **23** will be selected for engagement by lugs **39**. Button **37** extends through the adapter aperture formed when brackets **18** were blanked and bent rearwardly. Brackets **18** have a sufficient amount of spring tension to support case **26** therebetween.

Thereafter, the combined adapter and switch assembly are passed through aperture **17** of mounting plate **16** until flanges **12** and **13** lie flat against the outer surface **14** of said plate and case **26** is suspended between brackets **18** behind rear surface **19** of plate **16**. Due to the outward spring tension exerted by elements **21**, spring bows **22** are urged against the top and bottom edges, respectively, of aperture **17** whereby the adapter and switch assembly are not only supported firmly within mounting plate **16** but also inverse pressure is exerted back upon

brackets **18** so that the secure engagement between lugs **39** and notches **23** is enhanced. Furthermore, by virtue of the outward curvature of bows **22**, the adapter is secured to and removed from plate **16** by spring-like snap action.

FIGS. 6 through 10 illustrate another embodiment of the invention wherein the same reference numerals are designated for parts which are similar in structure and function to those in FIGS. 1 through 5, although the comparable parts may differ somewhat in dimensions. Widened frame **11** now contains an array of four switch buttons **37**, two of which are mounted upon switch case **26***a* and the other two on case **26***b*. Each case **26***a* and **26***b* contains two sets of switch systems, each of which are operated by respective button **37**.

Here also the adapter is blanked from a unitary piece of sheet metal and formed into a pair of rearwardly extending, spaced apart brackets **41**. Each bracket **41** is blanked at intervals to form a plurality of spaced apart spring elements **42**. One end of each element **42** is integral with the rear portion of said bracket while the free end thereof extends forwardly and somewhat outwardly toward flange **13**. The forward free ends of elements **42** terminate in arcuate bows **43** which engage the inner edges of aperture **17** in the same manner as bows **22** of spring elements **21**. See FIGS. 4 and 9.

Between selected pairs of spring elements **42**, rearwardly extending portions **44** of bracket **41** are provided on their edges with a plurality of spaced apart pairs of slots or notches **45**, each of said pairs being adapted to accommodate a corresponding pair of lugs **39** extending outwardly from the sides of cases **26***a* and **26***b*, respectively. Depending upon the depth of cases **26***a* and **26***b* and the size of button **37** and the distance of the latter from the former, particular pairs of notches **45** will be selected for engagement by lugs **39** properly to locate said components relative to mounting plate **16** by means of the snap-in adapter.

Opposing brackets **18** (FIGS. 1–5), as well as opposing brackets **41** (FIGS. 6–10), are originally arranged relative to flange **13** at a particular angle whereby the insertion of the opposite two pairs of lugs **39** into notches **23** and **45**, respectively, causes the outward flexure of said brackets and induces a spring or resilient tension therein for firmly supporting cases **26**, **26***a* and **26***b*, respectively, therebetween.

Furthermore, by determining the shape and dimensions of elements **21** and **42**, the outwardly extending spring bows **22** and **43**, respectively, engaging mounting plate **16** by snap action will exert inward pressure upon respective brackets **18** and **41** to reinforce the engagement between lugs **39** and notches **23** or **45**, respectively.

In some embodiments of the present invention, the paired notches **23** or **45** in each bracket **18** or **44**, respectively, may be replaced by an interior row of single, spaced apart slots or notches, any one of which is selectively engageable by a single lug on a corresponding side of a switch case for suspending the latter between said brackets in a desired position relative to the mounting plate. In such an embodiment, it may be desirable to elongate such substituted slots or notches to accommodate correspondingly widened switch case lugs in order to enhance the stability of the assembly.

It is claimed:

1. An adapter for attaching a switch case to a mounting plate having an aperture therein, comprising a member made of a unitary piece of sheet metal, said member being blanked to form from the central portion thereof a pair of rearwardly extending resilient brackets integral with said member, said brackets being further blanked to form on each side thereof a pair of resilient spring elements extending outwardly from the rear ends of said brackets and forwardly toward said plate, the remainder of said member forming an integral frame formed of a pair of vertical flanges and horizontal flanges adapted to rest against the front face of said mounting plate, said brackets and spring elements extending rearwardly from said plate, the forward ends of said spring elements engaging a pair of opposing horizontal edges of said aperture by snap action to maintain said adapter in position on said plate, and a plurality of spaced apart notches formed in each bracket, said notches being formed at varying distances from the forward end of each respective bracket, said notches being selectively engageable by said switch case to be suspended between said brackets in a desired location relative to said mounting plate, said spring elements urging said respective brackets towards each other to ensure engagement of said switch case therebetween.

2. An adapter for attaching a switch case to a mounting plate having an aperture therein, comprising a member made of a unitary piece of sheet metal, said member being blanked to form a pair of rearwardly extending spaced apart brackets, at least one spring element blanked from each bracket and extending outwardly from the rear end of said bracket and forwardly toward said plate, the forward ends of said spring elements engaging a pair of opposing edges of said aperture by snap action to maintain said adapter in position on said plate, and a plurality of spaced apart notches in each bracket formed at varying distances from the inner end thereof, said notches being selectively engageable by a switch case to be suspended between said brackets in a desired location relative to said mounting plate, said spring elements urging said respective brackets towards each other to ensure engagement of said switch case therebetween.

3. An adapter for attaching a switch case to a mounting plate having an aperture therein, comprising a member made of a unitary piece of sheet metal, said member being blanked to form a pair of rearwardly extending spaced apart brackets, at least one spring element blanked from each bracket and extending outwardly from the rear end of said bracket and forwardly toward said plate, the forward ends of said spring elements engaging a pair of opposing edges of said aperture by snap action to maintain said adapter in position on said plate, and a plurality of spaced apart notches formed along two side edges of each bracket, said notches being selectively engageable one on each side in pairs by corresponding pairs of switch case elements for suspending said switch case between said brackets in a desired location relative to said mounting plate, said spring elements urging said respective brackets towards each other to ensure engagement of said switch case therebetween.

4. An adapter for attaching a switch case to a mounting plate having an aperture therein, comprising a member made of a unitary piece of sheet metal, said member being blanked to form a pair of rearwardly extending spaced apart brackets, a spring element blanked from each edge of each bracket and extending outwardly from the rear end of said bracket and forwardly toward said plate, the forward ends of said spring elements engaging a pair of opposing edges of said aperture by snap action to maintain said adapter in position on said plate, and a plurality of spaced apart notches formed along two side edges of each bracket, said notches being selectively engageable one on each side in pairs by corresponding pairs of switch case elements for suspending said switch between said brackets in a desired location relative to said mounting plate, said spring elements urging said respective brackets towards each other to ensure engagement of said switch case therebetween.

5. An adapter for attaching a switch case to a mounting plate having an aperture therein, comprising a member made of a unitary piece of sheet metal, said member being blanked to form a pair of spaced apart brackets extending rearwardly from the resulting central aperture in said member, the remainder of said member surrounding its aperture having the form of a frame constituted of a pair of end flanges and side flanges integral with each

other, at least one spring element blanked from each bracket and extending outwardly from the rear end of said bracket and forwardly toward said plate, the forward ends of said spring elements engaging a pair of opposed edges of said plate aperture by snap action on one side of said plate to cause said flanges to be urged flat against the other side of said plate, and a plurality of spaced apart notches formed in each bracket at different distances from the inner end thereof, said notches being selectable to cooperate with corresponding elements on a switch case to be suspended between said brackets in a desired location relative to said first mentioned side of said plate, said spring elements urging said respective brackets towards each other to ensure engagement of said switch case therebetween.

6. A switch assembly comprising a mounting plate, an aperture in said mounting plate, a switch case, a plurality of engaging means on each of two sides of said switch case, an adapter for mounting said case on said plate, said adapter being made of a unitary piece of sheet metal, the center portion of said adapter being blanked and bent to form a pair of spaced apart, rearwardly extending brackets, a plurality of receiving means on each of said brackets, said engaging means cooperating with said receiving means to mount said case between said brackets, and resilient means on each of said brackets engaging said plate by snap action to maintain said adapter in position on said plate and urging said brackets toward each other to ensure the cooperation of said engaging means and said receiving means.

7. A switch assembly comprising a mounting plate, an aperture in said mounting plate, a switch case, engaging means on each of two sides of said switch case, an adapter for mounting said case on said plate, said adapter being made of a unitary piece of sheet metal, the center portion of said adapter being blanked and bent to form a pair of spaced apart brackets extending through said aperture and rearwardly of said plate, a plurality of receiving means arrayed along each of said brackets, said engaging means cooperating with selected ones of said receiving means to mount said case between said brackets in a selected position relative to said plate, and resilient means on each of said brackets engaging said plate by snap action to maintain said adapter in position on said plate and urging said brackets toward each other to ensure the cooperation of said engaging means and said receiving means.

8. A switch assembly comprising a mounting plate, an aperture in said mounting plate, a switch case, engaging means on each of two sides of said switch case, an adapter for mounting said case on said plate, said adapter being made of a unitary piece of sheet metal, the center portion of said adapter being blanked and bent to form a pair of spaced apart brackets extending through said aperture and rearwardly of said plate, a plurality of receiving means arrayed along each of said brackets, said engaging means cooperating with selected ones of said receiving means to mount said case between said brackets in a selected position relative to said plate, and resilient means on each of said brackets engaging said plate by snap action to maintain said adapter in position on said plate, the shape and dimensions of said resilient means being determined to enhance the cooperation between said engaging means and said receiving means.

9. A switch assembly comprising a mounting plate, an aperture in said mounting plate, a switch case, engaging means on each of two sides of said switch case, an adapter for mounting said case on said plate, said adapter being made of a unitary piece of sheet metal, the center portion of said adapter being blanked and bent to form a pair of spaced apart brackets extending through said aperture and rearwardly of said plate, a plurality of receiving means arrayed along each of said brackets, said engaging means cooperating with selected ones of said receiving means to mount said case between said brackets in a selected position relative to said plate, and resilient means on each of said brackets engaging said plate by snap action to maintain said adapter in position on said plate and urging the respective brackets inwardly toward each other to enhance the cooperation between said engaging means and said receiving means.

References Cited by the Examiner

UNITED STATES PATENTS

2,160,713	5/39	Bentley	174—53
2,309,189	1/43	Hancock et al.	248—27
2,703,662	3/55	Meyer	248—27 X
2,889,125	6/59	Hart	248—27
2,917,199	12/59	Appleton	220—3.7
3,091,679	5/63	Norden	339—128

LARAMIE E. ASKIN, *Primary Examiner.*

JOHN P. WILDMAN, JOHN F. BURNS, E. JAMES SAX, *Examiners.*