Dec. 4, 1951 G. B. KNÖS 2,577,468

CROSS BAR SWITCH FOR AUTOMATIC TELEPHONY

Filed Dec. 6, 1947 3 Sheets-Sheet 1

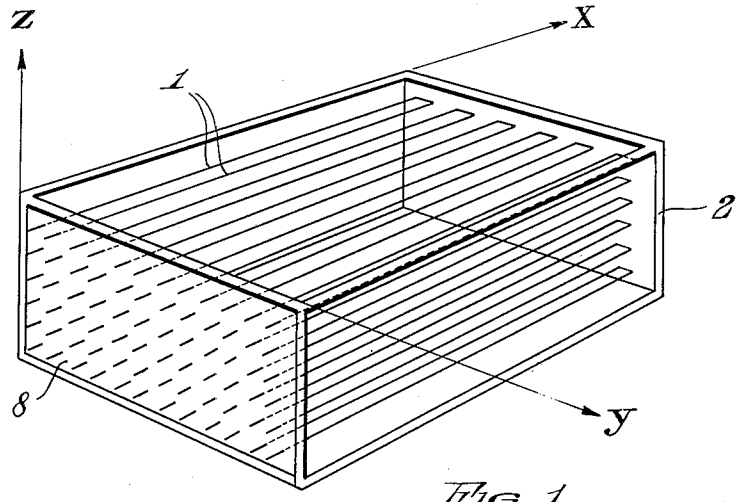

Fig. 1.

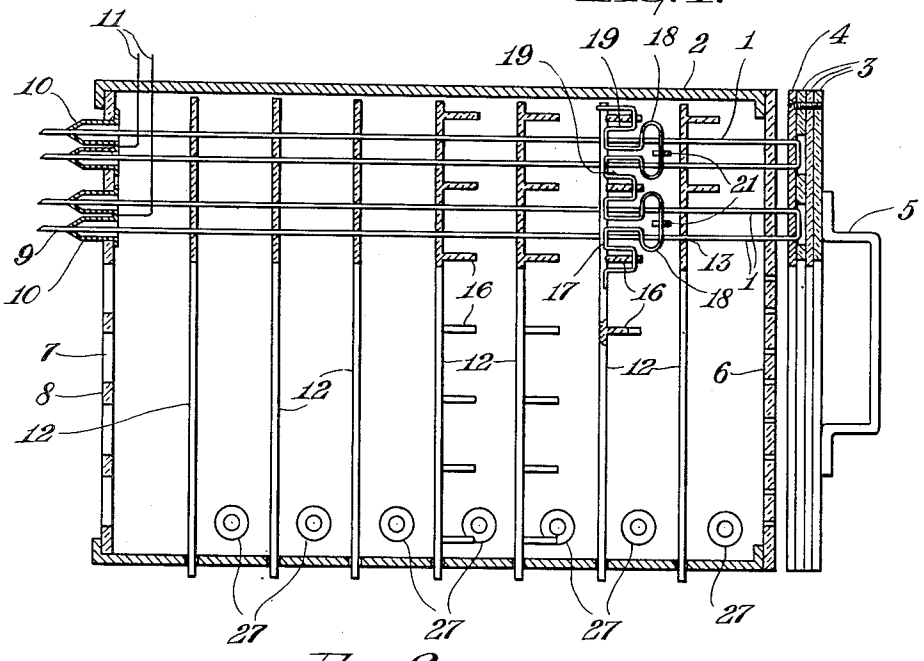

Fig. 2.

INVENTOR.
GUNNAR BORGE KNÖS.
BY Fred W. Voigt
AGENT.

Dec. 4, 1951 G. B. KNÖS 2,577,468

CROSS BAR SWITCH FOR AUTOMATIC TELEPHONY

Filed Dec. 6, 1947 3 Sheets-Sheet 2

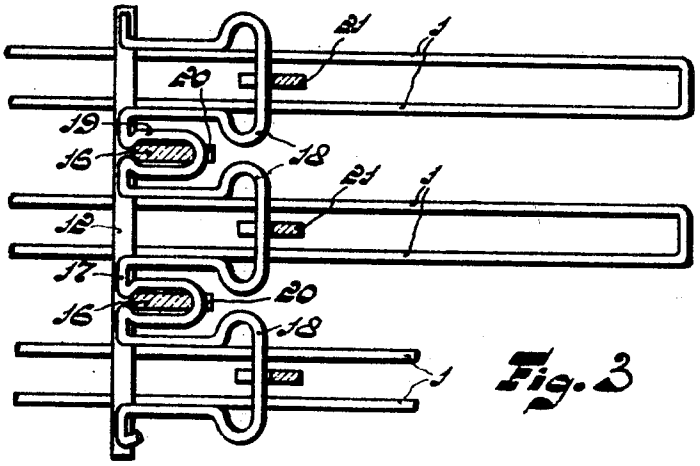

Fig. 3

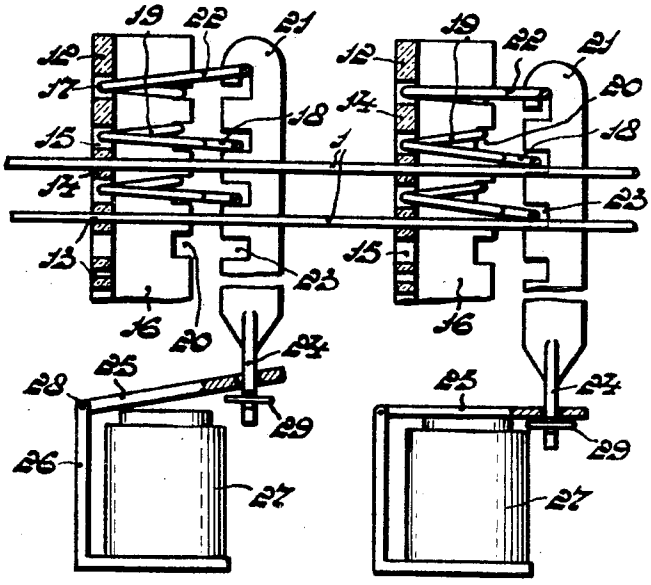

Fig. 4

Fig. 5

G. B. KNOS
INVENTOR
BY Glen M. Vogel
AGENT

Dec. 4, 1951 G. B. KNÖS 2,577,468

CROSS BAR SWITCH FOR AUTOMATIC TELEPHONY

Filed Dec. 6, 1947 3 Sheets-Sheet 3

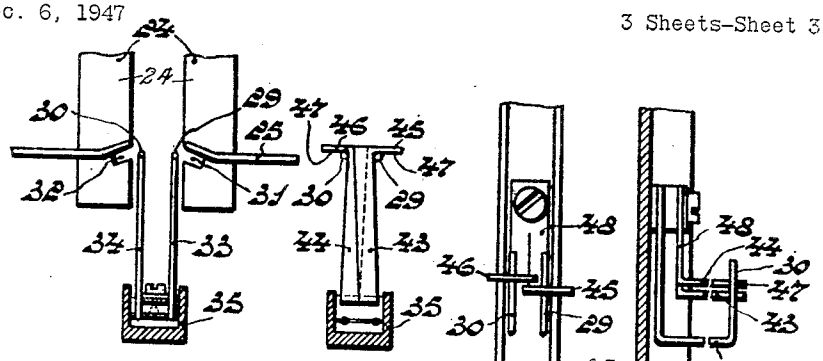

Fig. 6 Fig. 8 Fig. 9 Fig. 10

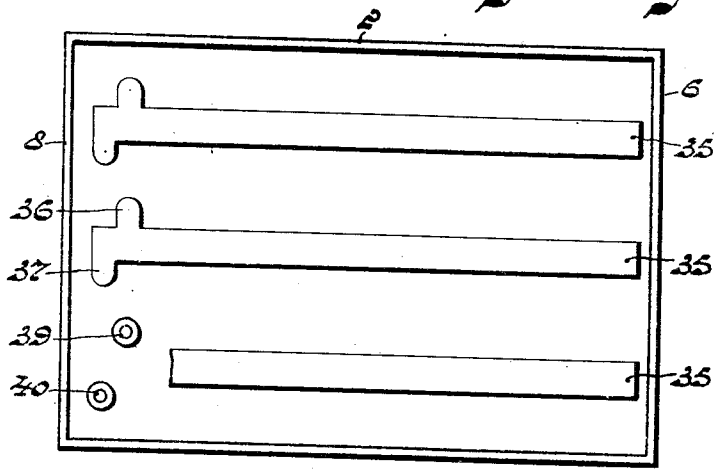

Fig. 7

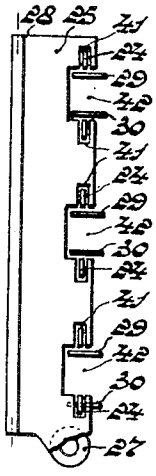

Fig. 11

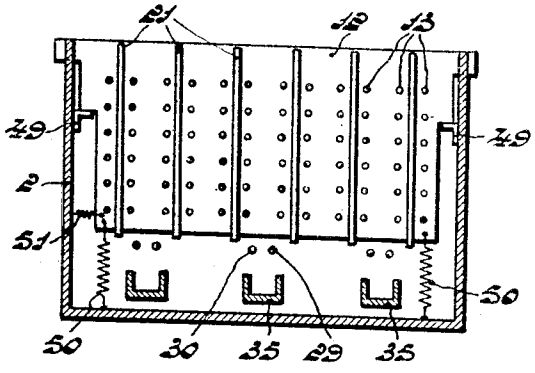

Fig. 12

G.B.KNOS

BY

AGENT

Patented Dec. 4, 1951

2,577,468

UNITED STATES PATENT OFFICE

2,577,468

CROSS-BAR SWITCH FOR AUTOMATIC TELEPHONY

Gunnar Börge Knös, Eindhoven, Netherlands, assignor to Hartford National Bank and Trust Company, Hartford, Conn., as trustee

Application December 6, 1947, Serial No. 790,085
In the Netherlands September 4, 1946

Section 1, Public Law 690, August 8, 1946
Patent expires September 4, 1966

14 Claims. (Cl. 179—27.54)

1

In some systems of automatic telephony, in order to enable each of a system of channels to be connected to an arbitrary channel of another system, use is made of a so-called cross-bar switch. This is an assembly of elements comprising a fixed and a movable resilient contact member. In the position of rest the resilient contact member is relaxed and out of contact with the associated fixed contact member. In the operating position it is stretched by a relay (contact relay) and brought into contact with the fixed contact member, so that the wires connected to the fixed and movable contact members are interconnected.

These elements are arranged at the intersections of a series of parallel, straight lines located in a plane and another series of parallel, straight lines in the same plane, at right angles to the former. Consequently, they are arranged in rows in two directions normal to one another of one plane, which directions will be distinguished hereinafter as direction X and direction Y. The fixed contacts of each row in one direction are interconnected, similarly to the movable contacts of each row in the other direction. A complete row of movable contacts in the direction Y is moved by the same relay. This can only occur, however, if an intermediate body, which in most cases exhibits the shape of a pin, occupies a definite position. Consequently, this pin couples, as it were, the movable contacts with the contact relay and will therefore be referred to hereinafter as coupling pin. All movable contacts of one row in the direction X are coupled simultaneously with their contact relay. For the movement of the coupling pins provision is made of a second system of relays (coupling relays). The coupling is maintained after the energization of the coupling relay has ceased; it ceases as soon as the contact relay is de-energized.

Use is made of special circuit-arrangements preventing a second contact from being closed on an occupied row. Thus, the number of contacts simultaneously closed can only be equal to the smallest number of rows in one of the two directions. As a rule, there are ten X-rows and from ten to twenty Y-rows, so that ten contacts at the most are adapted to be closed simultaneously.

The invention relates to a cross-bar switch, the construction of which materially differs from the switch usually employed. It offers the advantage of a structural simplification and facilitates the inspection and the exchange of defective parts. Further advantages of the cross-bar switch according to the invention will appear from following description.

2

In the cross-bar switch according to the invention the contact members are constituted by metal wires. The fixed members are constituted by one or more grids of parallel, straight wires located in a plane (fixed contact wires), over which the contact points are distributed and which are supported between the contact points. The movable contact members are constituted by wires (movable contact wires) all of which cross the fixed contact wires of a grid at the contact points, and which are supported between the latter. They are adapted to be bent by catches in the proximity of the fixed contact wires and thus to be brought into or out of contact with each of the fixed contact wires of the grid. These catches are adapted to be moved transversely to the fixed contact wires by means of a relay (contact relay).

Consequently, each row of fixed contact members in the direction X comprises a single metal wire, which constitutes both the contact members and their mutual connections, similarly to each row of movable contact members in the direction Y.

It may be observed that a switching arrangement for automatic telephony in which contact members comprise movable and fixed wires is known per se. However, in this case we are not concerned with a cross-bar switch, but with a switching arrangement in which each of a row of groups of movable contact wires is adapted to be brought into contact with a group of fixed wires, which, instead of being permanently connected to lines, serve only as coupling elements. Furthermore, in the said arrangement each movable contact wire only serves for a single element, so that the movable contact wires do not also constitute the mutual connections of a plurality of contact members.

Although for a proper surveyability and for facilitating the manufacture and mounting it is desirable that the contact wires should be equally spaced apart and that the directions X and Y should be at right angles to one another, such is not expressly required.

As a rule, a channel to be connected, instead of consisting of a single current wire, comprises a plurality, for example, six current wires, so that each contact is required to be made in multiple. The cross-bar switch according to the invention may also be designed for this purpose. In this case provision is made of a plurality of parallel grids of contact wires, prefer-

ably equally spaced apart, the contact wires being arranged in such manner that all contact points associated with the same channel are substantially in one line in a third direction, the direction Z, which is preferably at right angles to the plane of the grids. All of these contacts are actuated simultaneously by the same catch.

In the known cross-bar switches the movable contact members are generally provided with double contact points which act as separate springs and each of which possesses its own contact body of precious metal. Such contact bodies are frequently shaped in the form of small pieces of metal wire which are so secured to two cooperating springs that the wires are brought into contact with one another in a crosswise manner. This double form ensures greater security of the contact being actually established. If one of the contact bodies should be contaminated to such extent that the current cannot pass or can pass only to an insufficient extent, there is a second current path, which is probably more satisfactory.

Without the need for constructing the movable contact members in two parts, this principle of double contacts may be applied to the cross-bar switch according to the invention and this in a manner which affords still greater advantage than with the known apparatus. For this purpose the fixed contact wires are in the form of double, interconnected wires. In this case the catches are arranged symmetrically relatively to each of the pairs of wires, hence in such manner that they engage between the wires of the pair and the movable contact wires come into contact with the two fixed contact wires. The bifilar wires of each grid are located in a plane and, if a plurality of grids is provided, the fixed contact wires associated with the same channel preferably constitute two flat parallel planes. If the movable contact wire at the intersection happens to be not exactly parallel to the plane of the bifilar wires, the contact is at first established with one wire and then the catch is moved on until contact is also established with the other wire.

The movable contact wires may be straight wires. In this case, in order to ensure adequate flexion without undue force of the relay, the points of support are to be spaced apart fairly widely and the arrangement occupies much space. It is therefore more advantageous, instead of using straight wires for the movable contacts, to use wires which exhibit a lateral bend at the contact points, that is to say wires bent in a meander-like manner. Consequently, such a wire exhibits a plurality of bows (contact bows) which are located in a plane and equal in number to the adjacent pairs of fixed contact wires in the direction Y. Between these bows the wire is secured to a fixed support, the catches engaging in the tops of the bows.

The method of securing the movable contact wires may be improved by providing them moreover with fixed secondary bows which alternate with the contact bows, so that each contact bow is located between two of such secondary bows. Since the latter serve to tighten the movable contact wires, the secondary bows will be referred to, hereinafter, as tightening bows. These fixed tightening bows, upon movement of a contact bow, prevent the adjacent contact bows from being moved by the torsional forces of the wire. They constitute the lever arms for the reaction forces which are, in this case, smaller

than with connection of the contact bows by means of clamped straight pieces.

By means of the tightening bows, the movable contact wires preferably have imparted to them, in the position of rest of the contact bows, a mechanical tension which tends to press the contact bows on the fixed contact wires.

Since the usual contact relays operate in one direction only, i. e. the movable contact member is moved in one direction only by the energized relay, the connections are required to be interrupted by spring force. One suitable form of cross-bar switch according to the invention comprises, for this purpose, a spring constituted by a metal wire of resilient material, for example steel, which does not serve as a contact member but which otherwise exhibits the same shape and occupies a corresponding position as the movable contact wires. Such a spring wire is provided for each row of catches associated with the same movable contact wire. The catches are hooked on the bows of this wire corresponding to the contact bows. The spring wire exerts on the catches a force which is opposite to the force exerted thereon by the energized contact relay. If the movable contact wires, in their position of rest, exhibit a preliminary tension, the contact relay is required to exert a force which overcomes the difference between the force exerted by this preliminary tension and the force exerted by the spring wire on the contact bows. When the relay is de-energized the spring wire moves the catches into the position in which the contact bows keep clear from the fixed contact wires.

The invention provides the advantage of much facilitating dismounting of the cross-bar switch owing to the fact that the ends of all fixed contact wires are secured to a pull-plate, with the aid of which they are adapted to be removed in the direction X all of them at the same time. This pull-plate may be entirely or partly of insulating material or entirely of metal. In the latter case the wires are required to be secured thereto by means of insulators.

The current supply is preferably effected at the other ends of the wires, so that there is no need for removing the connecting wires jointly with the pull-plate. A simple method of connecting the current supply wires is ensured by a construction in which the ends of the fixed contact wires serve as contact pins which fit into contact sleeves through which the current is supplied to the wires. Upon removal of the contact wires the connection with the current supply wires is in this case immediately interrupted. The wires remain attached to the apparatus and the contact points are immediately accessible to inspection.

As has been mentioned before, the fixed contact wires are supported between the points of contact, so that they exhibit no flexion at all or but a slight flexion on being engaged by the movable contact wires. The movable contact wires are secured to a fixed support, which may very well serve to support at the same time the fixed contact wires. For this purpose it is shaped in the form of a wall of insulating material provided with apertures through which the fixed contact wires are passed.

Provision may also be made to ensure a ready removal of the movable contact wires, namely by constructing the fixed supports to be extensible. In this case, after the fixed contact wires have been removed, the fixed supports are

adapted to be moved in their own plane and to be removed with the movable contact wires supported by them.

In the cross-bar switch according to the invention it is desirable, as in the case of the known cross-bar switches and the known switching arrangements previously referred to, that there is a device for coupling the movable contact members with the contact relay only under definite conditions. For this purpose provision may be made for each catch of a device controlled by another relay, referred to hereinafter as coupling relay, which device is intended for coupling a catch with its contact relay. It is in this case desirable to use a minimum of frictional parts in order to avoid wear and tear and contamination by ground-off material. So far as frictional parts are unavoidable, the aim should be to minimize the frictional forces involved.

In one form of construction which is very successful in this respect, the catches are entirely or partly in the form of flat plates, at right angles to the direction of the fixed contact wires, each of which exhibits a slot in a direction transverse to the direction of movement of the catches, which slot is adapted to accommodate a coupling pin which is urged by an armature moved by the contact relay, as a result of which the catch is moved.

In order to reduce the number of movable parts, the coupling pins of every two X-rows of catches may be controlled by one coupling relay. In one particular form of cross-bar switch according to the invention the coupling pins are secured, by means of a flexible elastic support, to a member (coupling member) controlled by the coupling relay and adapted to be moved, by the coupling relay, from its position of rest, into two operating positions, viz. one position in which the coupling pins are slid into the slots of one row of catches and one position in which they are slid into the slots of the other row of catches. When a coupling pin has reached its operative position and the contact relay of the associated catch is energized, it is thus clamped and, even if the coupling member has, in the meantime, reached a different position, held in place, owing to the fastening by means of a flexible support, as long as the excitation lasts, whereupon the coupling pin returns to its initial position. Thus, the coupling relay is required to be energized only during a very short time for establishing each connection.

As will be explained more fully, it is advantageous to provide each catch with its own coupling pin and to provide the coupling member for each coupling pin with an inflexible support which urges the pin into the slot. This support receives the coupling pin which rebounds when the contact relay is deenergized. It may be provided with a slide surface on which the coupling pin seizes.

The coupling member, which supports the coupling pins and, as the case may be, the associated supports for all catches co-operating with a fixed contact wire, is preferably shaped in the form of a rod, which extends in the direction of the fixed contact wires and which is adapted to swing about an axis extending in the same direction.

In order that the invention may be more clearly understood and readily carried into effect, it will now be described more fully with reference to the accompanying drawing, which, for the

sake of clearness, shows diagrammatically one form of cross-bar switch according to the invention.

Fig. 1 is a perspective view of the position of the fixed contact wires,

Fig. 2 is a sectional view of the switch in a plane parallel to the grids,

Fig. 3 illustrates in detail the method of securing the movable contact wires,

Fig. 4 illustrates the movement of the contact bows provoked by the contact relay and shows the position of rest, whereas

Fig. 5 shows the same in the operating position.

Fig. 6 is a view of the coupling member in the direction of the fixed contact wires and

Fig. 7 shows the coupling members as viewed in a direction at right angles to the grids.

Fig. 8 shows the supports for the coupling pins, which are omitted in Fig. 6.

Fig. 9 is a sectional view of one of the contact members in a plane comprising the directions X and Z,

Fig. 10 is a plan view of the coupling pins in the direction Z.

Fig. 11 is a plan view of the armature of a contact relay and

Fig. 12 is a plan view of a fixed support in the direction X.

Similar parts shown in more than one figure are designated by the same reference numerals.

Referring to Fig. 1, reference numeral 1 designates six superposed grids of parallel metal wires fixed in a frame 2. In the embodiment to be described by way of example the fixed contact wires are arranged in accordance with this diagrammatic view. For the sake of an easy understanding the three directions which are normal to one another and which extend in accordance with the ribs of a parallelopiped formed by the framework are designated in the figure by the characters X, Y and Z. Thus the direction X always refers to the direction of the wires 1, the direction Y to the direction at right angles thereto in the plane of the grids, and the direction Z to the direction at right angles to the plane of the grids. It is not necessary for the main lines of the construction to be at right angles to one another, but they will in most cases be chosen to be such, since this facilitates the manufacture, the exchange of component parts as well as inspection. The figure shows, moreover, that in each instance two adjacent wires located in a plane X—Y are interconnected at the back. Thus, six pairs of fixed contact wires are located side by side, but this number is variable and may be increased, for example, to ten or more, in accordance with the communications to be expected or according to the system in which the apparatus is to be included.

Fig. 1 shows six superposed grids of fixed contact wires. The six superposed pairs are associated with one and the same channel. This number also is adapted to be varied and is dependent on the connecting system used, but, as a rule, each channel comprises two or more wires. Wires are required not only for the speech current but also for signals and generally one or more wires for testing purposes and so forth, all of which required to be simultaneously connected and detached for establishing and interrupting a telephonic communication.

Fig. 2 shows two of the six pairs of fixed contact wires of one grid and illustrates the manner in which they are secured, at the end where

the double wires are interconnected, to a metal pull-plate 4 with the aid of various layers 3 of insulating material. This pull-plate is provided with a handle 5. Pulling this handle causes the pull-plate jointly with all fixed contact wires to be removed simultaneously from the framework, the wires being led through the front wall 6 of the framework 2, which is of insulating material and which exhibits apertures through which the wires are passed.

On the opposite side the wires are passed through apertures 7 in the rear wall 8 of the framework, which also consists of insulating material. The extremities of the wires form contact pins 9, which are engaged by contact sleeves 10, which are secured in the apertures 7 and which are connected to current supply wires 11. Two contact sleeves jointly form one unit which co-operates with a pair of fixed contact wires which adds to the reliability of the connection with the current supply wires. The framework comprises a plurality of partitions 12 which are provided, similarly as the front wall 6, with apertures 13, through which the fixed contact wires 1 are passed. Consequently, these wires are supported at a plurality of points, between which the points of contact are located. The introduction of all wires at the same time is readily effected since the contact pins, after having been passed through one of the walls 12, immediately find a subsequent wall and hence do not sag. "Seeking" the apertures 13 by the points of the contact pins may be facilitated by providing the apertures to be conical in shape at the front.

Although not strictly required, the partitions are, for practical reasons, equally spaced apart Fig. 2 shows entirely or in part seven of these partitions. This number is arbitrarily chosen and may be varied in accordance with the communications to be expected and so forth. The partitions 12 are constituted by separate, perforated strips 14 in the direction Y, each of which leaves a gap 15 (vide Figs. 4 and 5). These strips are held together by combs 16 in the direction Z, of which Fig. 2 shows some few only and which are integral with the strips 14.

The partitions 12 constitute the fixed supports for the movable contact wires 17. These wires are regularly bent in a meander-like manner and constitute contact bows 18 and secondary bows 19 in such manner that each contact bow is located between two secondary bows. The contact bows are so positioned with respect to the fixed contact wires 1 that their top parts cross a pair of wires. The secondary bows serve to secure and tighten the movable contact wires, on account of which they are referred to as tightening bows.

The movable contact wires 17 are located in the gaps 15 between the strips 14 of the partitions 12. As may be seen from Fig. 3, the tightening bows clamp themselves in position on the combs 16 of the partitions. Since the top of the tightening bows is located in a recess 20 in the top edge of the comb (vide also Figs. 4 and 5) the tightening bows are not or substantially not capable of moving.

In the relaxed state the plane of the tightening bows 19 is at an angle with the plane of the contact bows 18, so that the latter are urged against the contact wires (Fig. 5). In their position of rest, however, the contact bows are lifted by a catch 21, so that they do not engage the wires 1. The catch 21 is pulled upwards (in the direction Z) by a steel spring 22, which is constituted by a wire which has the same shape and occupies the same position as the movable contact wires 17, but which does not serve to make contact and of which the bow corresponding to the contact bows is urged, by the spring tension of the wire, in a direction opposite to that of the real contact bows. This spring tension is stronger than the joint spring tensions in the movable contact wires, which (similarly as the fixed contact wires) consist of comparatively weak, conductive material, such as phosphorus bronze.

The catches 21, of which in the case under consideration six are located in a Y-row and seven in an X-row, each consist of a strip of insulating material which exhibits notches 23 to receive the top parts of the contact bows. They are arranged symmetrically with respect to each pair of fixed contact wires. If a catch is pulled downwards against the action of the spring 22, the contact bow engages the fixed contact wire, on either side of the catch, so that contact is established at two points with substantially equal contact pressure. This also adds to the security of a proper contact being established and the symmetrical pressure prevents the moving contact members from being drawn in an oblique direction.

At the bottom end the catch terminates in a strip 24, the surface of which is at right angles to the direction X. This strip is adapted to be coupled with the armature 25 of a contact relay, of which the yoke is indicated by 26 and the coil by 27. The armature is rotatable about a spindle 28. Fig. 4 shows the armature when the contact relay is not energized and in Fig. 5 when the contact relay is energized. If the strip 24 is coupled with the armature 25, the catch is drawn downwards due to the attraction of the armature and all contact bows associated with the same catch, i. e. six in the case described, all of which co-operate with the same channel, are brought into contact with the co-operating pairs of fixed contact wires. The relay 27, which controls all catches co-operating with the same movable contact wire, hence six in the present case, ensures a direct closure of the contacts, hence the indication "contact relay." As soon as the energization of the relay 27 ceases, the spring 22 pulls the catch and all its contact bows upwards and, as will be seen hereinafter, the mechanical coupling with the armature 25 is also interrupted.

The coupling between the catch and the armature is effected by means of a coupling pin. These pins are provided in pairs. A pair of such coupling pins are indicated in various figures by 29 and 30. In the projections of Figs. 4, 5 and 9 one coupling pin only is shown, since the others are covered by it. Figs. 6, 8, 10 and the more diagrammatic Fig. 12 show both of them.

Fig. 6 shows the strip 24 into which the catches terminate at the bottom. This strip is provided, transversely to the direction of movement, with two slots 31 and 32. The coupling pin 29 is adapted to be slid into the slot 31, the pin 30 into the slot 32. In view of the circular movement of these pins, the slot is not at right angles, but slightly inclined to the direction Z.

The coupling pins are secured, by means of a flexible resilient support 33, 34 respectively, to a rod 35 which is adapted to swing about an axis extending in the direction X. The rod 35 is adapted to occupy three positions, a central position, the position of rest, in which it is shown in Figs. 6 and 12, an operating position in which the pin 29 is moved into the slot 31, and a sec-

ond operating position in which the pin 30 is moved into the slot 32. For moving the rod 35 provision is made, at the extremity located in the proximity of the wall 8, of two relay armatures 36 and 37 which form parts of a relay comprising two coils 39 and 40. In Fig. 7 a portion of the lower rod is left out in order to show the position of the relay coils. If coil 39 is energized, the rod 35 reaches the position in which the pin 29 enters the slot 31; if coil 40 is energized, the rod 35 reaches the position in which the pin 30 enters the slot 32. If neither of the coils is energized, a spring (not shown) restores the rod 35 to its central position. Coupling pins occupying the position of rest do not follow the movement of the armature of the contact relay. This implies an appreciable reduction of the moving mass and of the energy required.

Since the relay comprising the coils 39 and 40 serves to couple the catches with the armature 25, it is referred to by the denomination "coupling relay," and the rod 35, which in this case serves as an intermediate member, is referred to as "coupling member." Thus, each coupling member controls two rows of seven catches each and, since there are six of these rows, three coupling members are required in the case described.

Special connections and auxiliary means, comprising inter alia some few auxiliary contacts controlled by the same relay, but not necessarily differing from those used for a similar purpose in the known cross-bar switches, so that they will not be described here more fully, ensure that two or more relays cannot be energized at the same time and that a coupling relay cannot be energized as long as one of the catches of the row that would be coupled by this excitation is still coupled.

As long as the coupling member 35 is in its central position, the armature 25 cannot pull the catches downwards. The strips 24 lie free in a slot 41 of the armature 25 and the coupling pins in a recess 42, as may be seen from Fig. 11, so that the armature is adapted to turn about its spindle 23 without carrying along the strips 24 or the coupling pins 29 and 30. If, however, a coupling pin is slid into the slot of the strip 24 of one of the catches, so that it occupies the position which is shown in Fig. 11 for the lowest pin 30, the armature, immediately on being energized, draws the coupling pin and consequently the catch downwards and the contacts are closed. The energization of the coupling relay takes, as a rule, only a short time and that of the contact relay mostly lasts during the whole time of the conversation.

When the excitation of the coupling relay ceases, owing to which the coupling member 35 returns to its central position, the coupling pin 30 remains clamped between the armature 25 and the lower wall of the slot 32, since the relay coil draws the armature and the spring 22 draws the catch. Consequently, the coupling is than maintained. The coupling pin cannot be drawn out of the slot by the coupling member 35 which has returned to its central position, owing to the flexibility of support 34 to which it is secured. Whilst the established communication is maintained, the coupling member can again be used to slide, in its second operating position, the coupling pins 29 into the slots 31. In the meantime the other coupling members are capable of coupling a catch with the armature of one or more of the other six contact relays. Only when the conversation has ended and the excitation of the contact relay ceases, does the clamping of the coupling pin cease and the pin can disengage from the slot.

The slot 41 need only be slightly wider than the thickness of the strip 24, and the points of clamping of the coupling pins may be close to one another. Thus, the pin may be comparatively light, so that the moving mass and, in addition, the frictional resistance to be overcome are small. Appreciable wear and tear and contamination as a consequence thereof are thus avoided.

A disadvantage of fastening the coupling pins by means of flexible supports 33 and 34 might be that the pins might not readily slide into the slots and that the supports might be bent at the slightest resistance. A second disadvantage would be that, on recurring, the pins would switch through and that the resilient supports would continue to oscillate for a long time afterwards. These disadvantages are avoided in that the coupling member is provided with a support for each coupling pin. In Figs. 8, 9 and 10 the support for the coupling pin 29 is indicated by 45 and that for the coupling pin 30 by 44. As may be seen from Fig. 8, these rigid supports embrace the coupling pin in a hook-like manner. Upon deflection of the coupling member they urge their coupling pin into the slot. On the return movement they release the pin, if the associated contact relay has been energized and, when the coupling pin returns, it is catched by the supports. In this case the hook-like part 45, 46 respectively may be so arranged as to constitute a slide surface 47 for the coupling pin, on which it seizes upon returning. Recoiling of the after its impact with the support is then damped by friction. Each pair of supports is made by bending from a single split metal plate 48. The supports may readily be readjusted in use by bending. In order to enable the arrangement of the supports, each coupling member is provided with two rows of coupling pins. In the absence of the supports it would not be necessary to construct the coupling pins in two parts.

Fig. 12 is a diagrammatic view of partition 12; it also shows the position of the coupling members 35. The partition is supported by two long angular beams 49 which extend in the direction X and which are secured to the side-walls of the framework. It is drawn on the beams by springs 50. The partition is drawn, in addition, to one side by a spring 51. Instead of using draw springs, use may be made of pressure springs. This construction ensures that all supports 12 occupy similar positions, so that each of their apertures 13 is in line with the corresponding apertures of all other supports.

An important advantage of the cross-bar switch according to the invention, as compared with the known switch, is that the partitions 12 together with the movable contact members may readily be removed without having to remove the coupling members 35. Consequently, if a defect should arise in an element, the support carrying this element is adapted to be readily exchanged for another, after the fixed contact wires have been pulled to a sufficient extent from the framework by means of the pull-plate 4 and the handle 5 and after the springs 50 and 51 have been detached.

What I claim is:

1. A cross-bar switch for automatic telephony comprising a planar grid constituted by a plurality of conductors disposed in spaced parallel relation, said conductors acting as the passive

contacts of said switch, a plurality of resilient wires arranged at spaced positions transversely with respect to said conductors, each of said wires being sinuously shaped to define a plurality of spaced bows, said bows acting as the active contacts of said switch, means fixedly to support each of said wires at points intermediate said bows, means normally maintaining said bows out of engagement with said conductors, and means coupled to said bows for rotating them into engagement with said conductors.

2. A cross-bar switch for automatic telephony comprising a planar grid constituted by a plurality of conductors disposed in spaced parallel relation, said conductors acting as the passive contacts of said switch, a plurality of resilient wires arranged at spaced positions transversely with respect to said conductors, each of said wires being flexiously shaped to define alternate and opposite active contact bows and tensioning bows, means fixedly to support the tensioning bows of each of said wires, means coupled to said contact bows urging them out of engagement with said conductors, and torque producing means coupled to said contact bows for rotating them into engagement with said conductors.

3. A cross-bar switch for automatic telephony comprising a planar grid constituted by a group of paired linear conductors arranged in spaced parallel relation, the conductors of each pair being interconnected at one end thereof to form a single passive contact, a plurality of resilient wires arranged at spaced position transversely with respect to said conductors, each of said wires being flexiously shaped to define a plurality of bows at spaced positions thereon, each bow forming an active contact intersecting a respective pair of said conductors, means to fixedly support each of said wires at positions intermediate said bows, spring means coupled to said bows to urge them out of contact with said conductors, and torque producing means coupled to said bows for effecting engagement of said bows and said conductors.

4. A cross-bar switch for automatic telephony comprising a planar grid constituted by a group of paired linear conductors arranged in spaced parallel relation, the conductors of each pair being interconnected at one end thereof to form a single passive contact, a plurality of resilient wires arranged at spaced position transversely with respect to said conductors, each of said wires being flexiously shaped to define alternate and opposite active contact bows and tensioning bows, each of said active contact bows intersecting a respective pair of said conductors, a supporting member for each wire fixedly to secure said tensioning bows, spring means coupled to said contact bows for urging same out of engagement with said conductors, and torque producing means coupled to said bows for effecting engagement of said contact bows and said conductors.

5. An arrangement, as set forth in claim 4, wherein each wire is so shaped that the tensioning bows secured to said supporting member lie in a plane which is at an angle with respect to the plane in which the contact bows are disposed whereby they normally impart to the contact bows a mechanical tension urging the contact bows in engagement with said conductors.

6. A cross-bar switch for automatic telephony comprising at least one planar grid constituted by a group of paired linear conductors arranged in spaced parallel relation, the conductors of each pair being interconnected at one end thereof to form a single passive contact, a plurality of resilient wires arranged at spaced positions transversely with respect to said conductors, each of said wires being flexiously shaped to define alternate and opposite active contact bows and tensioning bows, each of said active contact bows intersecting one pair of said conductors, supporting means fixedly to secure said tensioning bows, a plurality of catch plates each coupled to one of said active contact bows for shifting the position of the active contact bow relative to the associated pair of conductors, spring means coupled to said catch plates urging said contact bows out of engagement with said conductors, and electromagnetic relay means coupled to said catch plates for actuating same to effect engagement of said contact bows and said conductors.

7. A cross-bar switch as set forth in claim 6 wherein said each catch plate for an active contact bow is interposed between the two conductors of the associated passive contact and is movable in a direction normal to said conductors.

8. A cross-bar switch for automatic telephony comprising at least one planar grid constituted by a group of paired linear conductors arranged in spaced parallel relation, the conductors of each pair being interconnected at one end thereof to form a single passive contact, a plurality of resilient wires arranged at spaced positions transversely with respect to said conductors, each of said wires being flexiously shaped to define alternate and opposite active contact bows and tensioning bows, each of said active contact bows intersecting one pair of said conductors, supporting means fixedly to secure said tensioning bows, a plurality of catch plates each coupled to one of said active contact bows and movable in a direction normal to said conductors for shifting the position of the contact bow relative to the associated passive contact, spring means coupled to said catch plates to maintain said contact bows out of engagement with said passive contacts, electromagnetic relay means coupled to said catch plates for actuating same to effect engagement of said contact bows with said passive contacts, a frame for supporting said grid and including opposing end walls having apertures therein, the extremities of said conductors extending through the apertures in said opposing end walls, and a pull-plate exterior to said frame at one end wal lthereof and attached to said conductors at the interconnected ends thereof whereby the grid may be removed from said frame.

9. An arrangement as set forth in claim 8, further including contact sleeves attached to the other end wall of said frame in registration with with the apertures therein, the ends of said conductors being received within said sleeves, said contact sleeves serving to supply current to said conductors.

10. An arrangement, as set forth in claim 8, wherein said tensioning bow supporting means are constituted by a plurality of insulating walls disposed at spaced positions intermediate the end walls of said frame, said insulating walls having apertures therein through which the conductors of said grid are extended.

11. An arrangement as set forth in claim 8, wherein said tensioning bow supporting means are constituted by a plurality of removable insulating walls disposed at spaced positions intermediate the end walls of said frame, said insulat-

ing walls having apertures therein through which the conductors of said grid are extended, whereby said wires may be withdrawn from said frame.

12. A cross-bar switch for automatic telephony comprising a planar grid constituted by a group of paired linear conductors arranged in spaced parallel relation, the conductors of each pair being interconnected at one end thereof to form a single passive contact, a plurality of resilient wires superposed at spaced positions transversely with respect to said conductors, each of said wires being flexiously shaped to define alternate and opposite active contact bows and tensioning bows, each of said active bows intersecting a respective pair of said conductors, a supporting member for each wire fixedly to secure said tensioning bows, said wires being further shaped so that the tensioning bows secured to said supporting member lie in a plane at an angle to the plane in which the contact bows are disposed to impart to the contact bows a mechanical tension urging the contact bows into engagement with said conductors, a row of catch plates for each wire coupled to the respective contact bows thereof, each of said plates being interposed between the two conductors of the associated passive contact and being movable in a direction perpendicular relative to said conductors, a plurality of spring wires having a shape generally similar to said resilient wires, the tensioning bows of each spring wire being fixedly secured into a corresponding position by the supporting member for a resilient wire, the active bows of said spring wire being coupled to said catch plate and being so shaped with respect to its related tensioning bows as to exert a spring force onto said plate opposing and exceeding the tension thereon urging the contact bows of said resilient wire into engagement with the passive contacts whereby the contact bows of the resilient wire and the associated passive contacts are normally disengaged, and an electromagnetic operating relay having an armature coupled to said rows of plates which upon energisation of said relay shifts said plates into a position effecting engagement between the contact bows of said resilient wire and said passive contacts.

13. A cross-bar switch, as set forth in claim 12, further including a coupling relay having an armature and wherein each of said plates has formed therein in a direction transverse to the movement thereof a slot, a coupling pin slideably within the slot and coupled to the armature of said coupling relay, said coupling pin being inserted by the operation of said armature.

14. A cross-bar switch, as set forth in claim 13, further including a coupling member for said pins, the coupling pins for every two rows of catch plates being controlled by one coupling relay arranged to move a coupling member to which the coupling pins are attached by means of a flexible support from its position of rest into two operating positions, namely one in which the coupling pins assume their operating positions in one row of catch plates and another in which the pins assume their operating positions in the slots of the other row.

GUNNAR BÖRGE KNÖS.

REFERENCES CITED

The following references are of record in the file of this patent:

UNITED STATES PATENTS

Number	Name	Date
1,515,669	Forsberg	Nov. 18, 1924
1,517,425	Hendrickson et al.	Dec. 2, 1924
1,567,253	Forsberg	Dec. 29, 1925
1,567,532	Marburg	Dec. 29, 1925
2,137,514	Voss	Nov. 22, 1938
2,479,678	Graybill et al.	Aug. 23, 1949
2,517,679	Knos	Aug. 8, 1950

FOREIGN PATENTS

Number	Country	Date
533,504	Great Britain	Feb. 14, 1941