(12) INTERNATIONAL APPLICATION PUBLISHED UNDER THE PATENT COOPERATION TREATY (PCT)

(19) World Intellectual Property Organization
International Bureau

(43) International Publication Date
24 December 2020 (24.12.2020)

WIPO | PCT

(10) International Publication Number
WO 2020/256561 A1

(51) International Patent Classification:

B01D 1/00 (2006.01)	***F26B 3/20*** (2006.01)
B011) 1/22 (2006.01)	***F26B 3/24*** (2006.01)
B011) 1/24 (2006.01)	***F26B 17/20*** (2006.01)
C02F 11/13 (2019.01)	*C02F 101/32* (2006.01)
E21B 21/06 (2006.01)	*C02F 103/10* (2006.01)

(21) International Application Number:
PCT/N02020/050 154

(22) International Filing Date:
11 June 2020 (11.06.2020)

(25) Filing Language: English

(26) Publication Language: English

(30) Priority Data:
20190741 17 June 2019 (17.06.2019) NO

(71) Applicant: **RENA QUALITY GROUP AS** [NO/NO]; Brevikveien 29c, 4014 Stavanger (NO).

(72) Inventors: **AUSLAND, Tore;** Havnegata 5, 1555 Son (NO). **SAMUELSEN, 0rjan Weider;** Halvdan Svartes Gate l ib, 4044 Hafrsfjord (NO). **RANDA, Bent Atle;** Nyrudveien 5378, 9925 Svanvik (NO).

(74) Agent: **ACAPO AS;** P.O. Box 1880 Nordnes, 5817 Bergen (NO).

(81) Designated States *(unless otherwise indicated, for every kind of national protection available)*: AE, AG, AL, AM, AO, AT, AU, AZ, BA, BB, BG, BH, BN, BR, BW, BY, BZ, CA, CH, CL, CN, CO, CR, CU, CZ, DE, DJ, DK, DM, DO, DZ, EC, EE, EG, ES, FI, GB, GD, GE, GH, GM, GT, HN, HR, HU, ID, IL, IN, IR, IS, JO, JP, KE, KG, KH, KN, KP, KR, KW, KZ, LA, LC, LK, LR, LS, LU, LY, MA, MD, ME, MG, MK, MN, MW, MX, MY, MZ, NA, NG, NI, NO, NZ, OM, PA, PE, PG, PH, PL, PT, QA, RO, RS, RU, RW, SA, SC, SD, SE, SG, SK, SL, ST, SV, SY, TH, TJ, TM, TN, TR, TT, TZ, UA, UG, US, UZ, VC, VN, WS, ZA, ZM, ZW.

(84) Designated States *(unless otherwise indicated, for every kind of regional protection available)*: ARIPO (BW, GH, GM, KE, LR, LS, MW, MZ, NA, RW, SD, SL, ST, SZ, TZ, UG, ZM, ZW), Eurasian (AM, AZ, BY, KG, KZ, RU, TJ, TM), European (AL, AT, BE, BG, CH, CY, CZ, DE, DK, EE, ES, FI, FR, GB, GR, HR, HU, IE, IS, IT, LT, LU, LV, MC, MK, MT, NL, NO, PL, PT, RO, RS, SE, SI, SK, SM, TR), OAPI (BF, BJ, CF, CG, Cl, CM, GA, GN, GQ, GW, KM, ML, MR, NE, SN, TD, TG).

Published:
— *with international search report (Art. 21(3))*

(54) Title: A SLUDGE SEPARATOR

Fig. 9

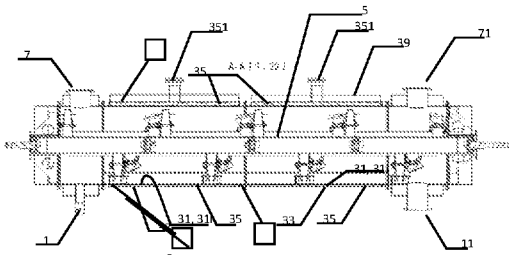

(57) Abstract: The invention is a sludge separator **(0)** for oil contaminated sludge masses, the sludge separator **(0)** comprising: - a first cylindrical, inner tank (31) comprising: - a sludge inlet (1), - a first evaporated gas outlet (7); - a solid matter outlet (11), - a conveyor auger (5) axially aligned inside said first, inner tank (31) for transporting oil contaminated sludge masses from said sludge inlet (1) towards said solid matter outlet (11), - a second cylindrical, outer tank (33) at least partially enclosing said first, inner tank (31) such that a cavity (35) is formed around said first, inner tank (31), - a heating element (13) arranged at least at a lower part of said second, outer tank (33), - wherein said cavity (35), in an operative state of said sludge separator, is filled with smelted Lead (Pb) so as for distributing heat over said first, inner tank's (31) surface (311).

WO 2020/256561 A1

TITLE: A SLUDGE SEPARATOR

Introduction

The present invention relates to a sludge separator (0) or more specifically a sludge solids / liquid separator, for separating petroleum fluids and other liquids from oil contaminated sludge masses such as the final separated sludge from used drilling mud, well clean-up, well cuttings, and the like, particularly from the petroleum industry.

Background art and problems

One practical but contaminating way of "getting rid of" oil contaminated sludge is to burn it.

Another way to treat sludge, in order to separate it, is to feed it through a tank, rotate an axial auger fast, i.e. 600 RPM, to friction heat fed sludge, in order to boil off water and oil gases in order to obtain an almost decontaminated dried powder / sand mass at the end.

However, the friction heat is high and the energy consumption is high, and the operating temperature in the heating chamber is uneven and uncontrolled to some degree. In the prior art, friction machines the uneven temperature may incur undesired cracking and tar formation to the petroleum liquids.

CN104496136 discloses a device for indirect heating and thermic desorption treatment of oil-polluted waste. The device comprises a cylindrical tank, a waste inlet, a gas outlet, a solid matter outlet, a screw conveyor axially arranged in the tank, said conveyor transporting the oil-polluted waste from the waste inlet to the solid matter outlet. A cylindrical outer tank encloses the tank. The space between the tank and the outer tank is provided with a burner in order to distribute the heat across the surface of the tank. The screw conveyor of CN104496136 is of conventional type and comprises a flighting. A plurality of mud turning plates is attached to said flighting. The purpose of said plates is to ensure that the sludge is more evenly mixed.

CN108929012 discloses a unit for treatment of sewage sludge by decomposing the sludge by means of heat. The unit comprises a cylindrical tank, a sludge inlet, a gas outlet, a solid matter outlet, a screw conveyor axially arranged in the tank, said conveyor transporting the sludge from the sludge inlet to the solid matter outlet, and a heating element arranged at a lower portion of the tank and a heating, spiral-shaped device around the tank.

CN105668989 comprises a system for treatment of oil sludge in order to separate oil and gas. The system includes two cylinders wherein the oil sludge is conveyed through the outer cylinder by means of an axially arranged screw conveyor provided in the cylinder for transporting the sludge from the sludge inlet towards the solid matter outlet. A heat element is provided in the inner cylinder.

GB292642 discloses a reaction chamber for reaction between solids and gasses. The chamber is a cylindrical tank with an axially arranged screw conveyor provided in the chamber in order to transport the solid matter from the inlet to the outlet. The reaction chamber is surrounded by a first cavity filled with smelted Lead and a second cavity holding the gas burner.

With reference to the cited prior art documents, it is, on a general level, desirable to improve control of sludge-separating process in the heating chamber.

Brief summary of the invention

The invention is a sludge separator (0) for oil contaminated sludge masses, the sludge separator (0) comprising:

- a first cylindrical, inner tank (31) comprising:
- a sludge inlet (1),
- a first, evaporated gas outlet (7);
- a solid matter outlet (11),
- a conveyor screw or auger (5) axially aligned inside said first, inner tank (31) for transporting oil contaminated sludge masses from said sludge inlet (1) towards said solid matter outlet (11),

- a second cylindrical, outer tank (33) at least partially enclosing said first, inner tank (31) such that a cavity (35) is formed around said first, inner tank (31),
- a heating element (13) arranged at least at a lower part of said second, outer tank (33), wherein said cavity (35), in operative state of said sludge separator, is filled with liquid Lead (Pb) so as for distributing heat over said first, inner tank's (31) surface (31i),
- said conveyor auger (5) comprises a plurality of radially extending arms (53), and each arm (53) is provided with a conveyor blade pair (52) with a first and second conveyor blade (54, 56), wherein the first conveyor blade (54) is arranged at a distance with respect to the second conveyor blade (56) and wherein said conveyor blade pair (52) is arranged at outer ends of said arms (53).

One advantage conferred is significantly reduced temperature gradient in the sludge to be treated (see Embodiments-section for further details). More precisely and as discussed in connection with Embodiments-section, the sludge is smeared, i.e. rather evenly distributed, along the inner surface of the inner tank by means of the blades. In this way, a thin layer of sludge is brought in contact with said inner surface. As this surface is substantially uniformly heated by means of the Pb-mantle surrounding the inner tank, all parts of the thin sludge layer have approximately the same temperature. Accordingly, temperature gradient in the sludge to be treated is significantly reduced. Also, excess heating of the sludge is avoided.

Conclusively, by virtue of the present invention, control of the sludge-drying process in a sludge separator for oil contaminated sludge masses is significantly improved. This improvement is obtained by reducing temperature gradient in the sludge undergoing treatment and/or by avoiding excess heating of the sludge.

In a related context, metal-to-metal contact between the conveyor blade and the inner surface of the inner tank is avoided. More specifically, gap between the blades of a blade pair is at least partially filled with sludge masses of varying wetness, which sludge masses form a continuously exchanged wiper mass that scrapes along the inner surface of the inner tank.

The invention is also the associated method indicated in an independent claim.

Embodiments of the invention are defined in the dependent claims and in the description.

Brief Figure captions

The invention is illustrated in the attached drawings, wherein

Fig. 1 is a side elevation view of a sludge solids / liquids separator (0) according to an embodiment of the invention, with an inlet section (100) for sludge to the left, two generally equal heating chamber sections (101, 102) at the middle, and an outlet section (111) to the right. Oil contaminated sludge is fed into the inlet (1) and de-contaminated dry masses are fed out through the outlet (11), while boiled-off gases escape through gas outlet (7) and are separated and / or liquefied. Heating elements (13) and auxiliary heating elements (13s) are illustrated.

Fig. 2 is an end view as seen from the inlet section (100), with the sludge inlet (1) here arranged at the bottom. A Lead inlet (351) is shown at the top of the separator (0).

Fig. 3 is an opposite side elevation view relative to Fig. 1. Heating elements (13) are illustrated at the bottom of an outer tank (33)

Fig. 4 is an opposite end view relative to Fig. 2, and at the bottom of the end section (111) is shown the outlet (11) for decontaminated dry sludge remains.

Fig. 5 is a bottom view of the sludge solids / liquid separator (0) of the embodiment of the invention shown in the previous Figures, showing the heating elements (13) arranged at the 1/3 bottom portion of the outer tank (33). Please understand that the inlet (1) may be arranged elsewhere than at the bottom of the inlet section (100), while the gas outlet (7) from practical reasons should be at the top.

Fig. 6 is an isometric view of the separator (0) of the embodiment of the invention. Please see that there are cover lids on the Lead inlets (351), and that an overpressure Argon (Ar)

supply should be connected to the Argon inlets (353) in order to avoid lead gas poisoning and gas contamination to the Lead mantle layer in the cavity (35). A burst disc is arranged in the contingency outlet (71).

Fig. 7 is a lower isometric view of the same tank, showing, in this embodiment, the bottom thirds of the outer tank, and the sludge inlet (1) and the outlet (11). This bottom third is exposed to heat from below. In other embodiments more than or less than a third is exposed to heat.

Fig. 8 is an opposite end isometric view as compared to Fig. 6.

Fig. 9 is an important illustration. It is a longitudinal vertical cross section of the sludge separator (0), and shows the hatched liquid Lead mantle filling the cavity (35) between the inner tank (31) and the outer tank (33). There is arranged the conveyor auger (5) axially through the cylindrical inner tank (31), with bearings on the inlet section (100) and the opposite outlet section (111). Arms (53) on the auger shaft (5a) carry "paddle" - like wiper blades or conveyor blades (52), please also see Figs. 12 and 13. Please notice that there is no metal to metal contact between the conveyor blade (52) and the inner surface (31i) of the inner tank (31).

Fig. 10 is a top view of the separator (0) of the embodiment of the invention with an open, uncovered gas outlet (7) for illustration, showing the shaft (5i) and part of a conveyor blade (52) of the conveyor auger (5).

Fig. 11 is also an important illustration. Flere is shown a vertical cross section to the left along the line B-B in the axial view to the right. Flere is clearly shown that the cavity (35) gap between the inner tank (31) and the outer tank (33) is wider at the bottom of the section than at the top of the section, and that it is filled with Lead to a desired level. In an embodiment of the invention the Lead extends a bit upwardly into the lower part of the Lead intake (351) at the top. In an embodiment such as this illustrated embodiment of the invention, there is a gap at the top of 10 mm and a wider gap of 40 mm at the bottom of the 0 1200 mm inner tank. It is experienced by the inventors that this gap difference provides an

improved heat distribution as compared to a strictly symmetrical tank cross section arrangement. Other embodiments of the tank may have other dimensions and gap sizes.

Fig. 12 is an end view and a lateral elevation view of the conveyor auger (5) with arms (53) with conveyor blades (52) with adjustable attack angle (see the screw-connected flanges). Each conveyor blade (52) in this embodiment has a double blade (54, 56) arrangement (please see Fig. 13) with an outer edge to be rotated near, but not in mechanical contact with, the inner wall (31i) of the inner tank (31). An electrical motor is connected to one of the ends of the shaft (5). In this embodiment there are arranged longitudinal reinforcement ribs onto the cylindrical hollow shaft.

Fig. 13 comprises different views of the arm (53) with a conveyor blade (52). Please notice the gap between the double blades pair (54, 56) which may fill with sludge material to act as a wiper. Please also see the adjustable angle flange making it possible to adjust the conveyor blade angle.

Embodiments of the invention

Sludge in the context of the present invention may comprise the remains from an earlier separation process which separated water, oil, oil contaminated cuttings, and oil contaminated drilling mud from a slop tank. The slop tank may hold a variety of oil and particle contaminated sludge which may be separated using a membrane separator, but at some stage the particle content becomes so high that it is more feasible to make the last separation of the sludge in the apparatus and process of the present invention. The desired end products of the present invention is water, oil, and decontaminated silt/sand/cuttings with less than 0.5% oil pollution remaining on the particles.

The present invention is a sludge separator (0) for separating fluids (gas and liquids) and solid matter in oil contaminated sludge masses]. The sludge separator (0) comprises a first tank (31) further comprising:

a sludge inlet (1) for feeding in sludge comprising oil contaminated masses,

a first evaporated gas outlet (7) for removing gas evaporated from said oil contaminated masses; and a solid matter outlet (11) for removing decontaminated solid matter.

Further, the sludge separator comprises:
- a transport auger (5) arranged inside said first tank (31), the transport auger (5) for transporting and kneading oil contaminated masses from said sludge inlet (1) towards said solid matter outlet (11); the conveyor auger rotation speed is 10 - 60 rotations per minutes,
- a second, outer tank (33) at least partially enclosing said first, inner tank (31) such that a cavity (35) is formed around said first, inner tank (31),
- a heating device (13) arranged at least at a lower part of said second, outer tank (33), and
- wherein said cavity (35), in the operative state of the sludge separator, is filled with liquid Lead (Pb) so as for distributing heat over said first, inner tank's (31) surface (31i), such that a temperature in the first tank (31) approaches a uniform distribution over the inner tank's surface (31i).

The cavity (35) filled with Lead is, and works as, a heat conducting liquid mantle about the inner tank (31). The sludge is pumped in via the inlet (1) into the inner tank (31). It is not massively conveyed ahead by the transport auger throughout the entire cross-section of the inner tank, but sheared and smeared out along the inner surface (31i) of the inner tank (31) while being gradually pushed in an increasingly evaporated-off, gradually dryer and cleaner state towards the solid matter outlet (11) for being removed for other use. The cleaned, decontaminated masses should have a remaining proportion of petroleum less than 0.5%. In a test run of the device we have achieved 0.18% pollution, which is far better than the requirement from the operator company.

The evaporated gas, which comprises water vapour and boiled-off and evaporated petroleum gas from the sludge (oil contaminated wet clay and/or sand and/or rock fragments and/or metal particles) is released through the evaporated gas outlet (7) to a scrubber, condenser or gas separator (9) for separating petroleum gas, petroleum liquids, and water.

So far we have described the apparatus which is designed for decontaminating oil-contaminated sludge.

If seen as a process, the invention is a sludge separation method for oil contaminated sludge masses, wherein the method comprises the steps of:

- feeding oil contaminated sludge via an inlet (1) into a first end of a first, cylindrical inner tank (31);
- transporting said sludge from said inlet (1) to an oppositely arranged outlet (11) by a rotating conveyor auger (5) and smearing said sludge peripherally around an inner surface (31i) of said first,

inner tank (31), while at the same time heating said sludge by evenly heating the whole surface of said inner tank (31) by smelted Lead surrounding the entire inner tank (31),

- thereby gradually evaporating water and oil gas from solid matter of the sludge;
- removing said petroleum gas and water vapour via a first gas outlet (7),
- removing decontaminated solid matter via a solid matter outlet (11) opposite of said inlet (1); and
- processing removed oil gas and water vapour in a gas separator.

One significant advantage of the liquid Lead distributing the heat more uniformly over the inner tank's (31) surface (31i) is that the sludge is heated more evenly both with regard to angular position on the inner surface (31i), but also with respect to time, and that excess heating of the masses is avoided. Excess heating of petroleum fluids in the presence of available Oxygen may incur undesired cracking of the petroleum fluids, and may also incur undesired combustion in petroleum gases formed during the heating. A barrier in the feed line and in a rotary valve on the outlet prevents such Oxygen to enter, and in addition we keep an overpressure in the system over the atmospheric pressure.

Distributing the temperature more evenly inside the inner tank (31) also reduces the risk of igniting an explosion of the evaporated petroleum gases inside the inner tank (31).

In previous sludge separators without the Lead mantle about the inner tank, we experienced about 250 deg. C. temperature difference between the lower, directly heated inner tank

portion and the top portion of the inner tank. It is desirable to have a significantly lower temperature difference.

With the present invention, we have measured about 20 deg. C. temperature, i.e. slightly cooler inside the top than inside the bottom. Having a more even angular heat distribution would also prevent having too low temperature in the top of the inner tank compared to the lower portions, which could induce gas to precipitate as liquid in the top of the inner tank, delaying the drying process.

In an embodiment of the sludge separator (0) of the invention, said first, inner tank (31) and said second, outer tank (33) are cylindrical.

In an embodiment of the invention the first, inner tank (31) and said second, outer tank (33) are concentric.

In an embodiment of the invention, the first, inner tank (31) and said second, outer tank (33) are slightly excentrically arranged, with a larger gap between their bottoms than between their tops, in order for the thickness of the liquid Lead mantle to be larger at the bottom portion where the heating occurs on the outside surface of the outer tank (33) , and where the sludge thickness may be higher initially, particularly near the inlet (1). For an embodiment the diameter 0 of the inner tank is 1200 mm, the lower gap 4 cm, and the upper gap 1 cm.

In an embodiment of the invention, the transport device (5) is arranged for distributing the oil contaminated masses by smearing it out peripherally around the inner surface of the first tank (31).

In an embodiment of the invention the blades of the conveyor auger (5) have a gap between their outer edge and the inner wall (31i) of the inner tank (31). Further, in an embodiment of the invention, the blades (54, 56) of the conveyor auger (5) are arranged in parallel pairs (52) with a mutual gap of about 1 - 5 cm, said gap for being partially filled with more or less wet sludge masses which will form a continuously exchanged wiper mass wiping along the inner

surface (31i) of the inner tank (31), thus preventing steel to steel contact along the inner surface (31i) of the inner tank (31).

In the embodiment shown in the drawing figures, see Fig. 1, there is arranged a Lead inlet (351) into the top of the inner tank (31) for feeding Lead (Pb) into said cavity (35). Please also see Fig. 11. In the left portion of Fig. 11, it is illustrated that the Lead level may in the operative state extend a bit up into the cylindrical pipe sleeve with the Lead inlet (351) in order to ensure that the level is above the top of the outer tank (33) in order to preserve the mantle layer formed by the Lead. The Lead level does not necessarily have to be above the top of the inner tank, as long as a satisfactory heat distribution is achieved. There may be an observation window for the Lead level in the pipe sleeve holding the Lead inlet (351).

In an embodiment of the invention there is arranged an Argon (Ar) inert gas inlet to the Lead cavity (35). The Argon (Ar) inert gas serves at least two purposes: It maintains an overpressure in the Lead filled cavity (35) so as for avoiding intrusion of other gases such as explosive gases from the inner tank (31). Other noble gases may be used but Argon is easily available as it constitutes almost ***1%*** by volume of the atmosphere. It prevents oxidation of the smelted Lead. In the test runs with the illustrated embodiment of the present invention the Argon overpressure is 0.2 Bar above the atmospheric pressure. During operation with smelted Lead, the Lead inlets (351) must be closed with caps on the flanges in order to prevent Lead fumes leaking out to the atmosphere and contaminate the operators. Lead poisoning is serious and incurs generally non-reversible neurological and cognitive damage. In an embodiment of the invention the transport device (5) is a kneader and conveyor auger (5) axially aligned inside the first tank (31), with a first end of the kneader and conveyor auger (5) arranged near the inlet (1) and a second end of the kneader and conveyor auger arranged near the second outlet (11), please see Figs. 9 and 10.

In an embodiment of the invention there is a safety outlet (71), connected to the first, inner tank (31), with a burst disc for mitigating explosions inside the first, inner tank (31). It can be connected almost in any practical positions, in the illustrated embodiment it is placed on top of the outlet section. In the prior art tank without a Lead mantle we have experienced small explosions due to ignition of the evaporated petroleum gas from the sludge inside the tank.

There may be arranged an insulation layer (39) at least partially covering the second, outer tank (33).

In the illustrated embodiment the insulation layer (39) covers the upper 2/3 of the outer tank (33), while the heating device (13) cover the lower 1/3. This may be done slightly different according to the discretion of the constructing engineer. It is believed that the heat supplied below the lower, exposed portion of the outer tank (33) will drive convection of the Lead liquid. In an embodiment, the heating element (13) in the bottom is slightly angularly asymmetrically arranged in order to drive the convection automatically.

In an embodiment of the invention the sub heating elements (13, (13a, 13b, ...)) comprised by the heating device (13) may be individually controlled, as the introductory sub heating element (13a) near the inlet (1) may work on a wetter and more oil-contaminated portion of the initially processed sludge, thus requiring more added heat than the dryer and cleaner sludge remains approaching the outlet (11). The heating device (13) may be electrical or a gas burner. The first requirement for the heating device (13) is to smelt and / or maintain the liquid state of the Lead in the entire volume (35) to form a liquid Lead mantle about the inner tank (31). The melting temperature of Lead is 327 deg. C. If desired, one may heat the Lead to about 450 - 470 deg. C (as measured within the Lead layer near the outer tank) depending on the nature of the sludge. In one embodiment, heating element (13) is heating the first tank at a higher temperature than the melting point of Lead and below the boiling point of Lead. The sub heating elements (13a, b, c, d) near said inlet (1) provide higher heating power than sub heating elements (13a, b, c, d) near said solid matter outlet (11).

In an embodiment of the invention, auxiliary heating elements (13s) are arranged on the remaining circumferential surface of the outer tank (33) not covered by the heating device (13). The heating device (13) and the auxiliary heating elements (13s) thus together cover the circumference of the outer tank (33) and may be operated together, particularly during the run-in phase of the tank when the Lead in the cavity is entirely or partly solid and shall be smelted before ordinary operation commences. In an embodiment of the invention the auxiliary heating elements (13s) cover the remaining 2/3 of the circumference, and may be arranged under the thermal insulation layer, directly on the surface of the outer tank (33).

The auxiliary heating elements may utilize the power capacity available while the tank is empty and needs no process energy, just smelting energy, and may be switched off when all the Lead is smelted and ordinary operation commences with pumping in of sludge through inlet (1). An advantage of this embodiment is that large temperature differences are avoided; one should not exceed 120 Deg C in order to avoid large thermal expansion differences between different parts of the tank. Large thermal expansion differences could incur misalignment between the auger and the inner tank (31) and / or deformation of the inner or outer tank which could incur cracks. When the Lead has smelted, there is thermal convection in the liquid Lead, and only the bottom-arranged heating device (13) is required. In the illustrated embodiment with an inner tank (33) of 0 1200 mm we have conducted test runs with 5150 kg / hr through the inlet, with up to 200 to 300 kW per sub heating element (13a, 13b, ...), and a retention time for the material of 8 - 12 minutes, obtaining 0.18 per cent remaining oil pollution in the decontaminated dried sludge at the outlet (11).

In an embodiment of the invention please see Fig. 9, the hatched liquid Lead mantle fills the cavity (35) between the inner tank (31) and the outer tank (33). The conveyor auger (5) extends axially through the cylindrical inner tank (31), with bearings on the inlet section (100) and the opposite outlet section (111). The arms (53) on the auger shaft (5a) carry "paddle" - like wiper blades or conveyor blades (52), please also see Figs. 12 and 13. Fig. 10 is a top view of the separator (0) of the embodiment of the invention with an open, uncovered gas outlet (7) for illustration, showing the shaft (5i) and part of a conveyor blade (52) of the conveyor auger (5) visible within the open hatch.

In the embodiment shown in Fig. 12, please also see Fig. 13, each conveyor blade (52) in this embodiment has a double blade (54, 56) arrangement with an outer edge to be rotated near, but not in mechanical contact with, the inner wall (31i) of the inner tank (31). An electrical motor is to be connected to one of the ends of the shaft (5). In an embodiment there are arranged longitudinal reinforcement ribs onto the cylindrical hollow shaft. The pair of blades (54, 56) are attached to the outer end of the radial arm (53). The radial arm (53) is subdivided into an inner section attached to the shaft, and with a flange connection (57), please see Fig. 13) which is rotationally adjustable about the axis of the radial arm (53),

please see each flange bolt hole (58) forming a sector allowing fixation of each conveyor blade (52) in a desired attack angle individually. According to an embodiment of the invention, there is no metal to metal contact between the conveyor blade (52) and the inner surface (31i) of the inner tank (31). In an embodiment the gap between the double blades pair (54, 56) which may fill with sludge material to act as a wiper. The sludge mass may gather between the pair of blades (54, 56) to farm a ductile mass which wipes the inner surface (31i) roughly the way a rubber wiper blade would do. Depending on the attack angle of the conveyor blade, their mutual gap, the gap between their outer edges and the inner surface (31i) if the inner tank, and the properties of the sludge mass locally along its path from inlet (1) to outlet (11), the sludge mass which is temporarily held between the blades, may gradually be replaced as the blades rotate and the mass moves and dries out. As the mass becomes drier and less sticky and thus less coherent while being transported towards the outlet (11), the pair steel blades (54, 56) may to a lesser degree retain such sludge mass, which gradually dried out, between the two blades (54, 56) but regardless they will transport dry mass the final portion towards the outlet (11) due to their attack angle and the fact that the almost dry mass will assemble as a thicker bottom layer in the tank towards the outlet.

The property of forming a wiper-blade like layer of sludge mass between the two blades (54, 56) which continuously wipes the sludge mass around the periphery of the inner surface (31i) of the inner tank and simultaneously towards the outlet, solves considerable problems related to hotspot deformation which may otherwise be incurred to the tank wall. Hotspot-deformation of the tank wall was sometimes incurred and is believed to be due to an undesired and uncontrolled formation of spots or a local layer of sludge mass stuck to the inner surface of the tank. It is believed that such a stuck layer will be thermally insulating, thus reducing the thermal transfer from the heating source to the sludge mass, thus simultaneously incurring both reduced production capacity and also risking thermal or mechanical deformation of the tank wall. Thus, the invention may be defined as follows:

A sludge separator (0) for oil contaminated sludge masses, the sludge separator (0) comprising:

a first cylindrical tank (31) comprising:

a sludge inlet (1),

a first evaporated gas outlet (7);

a solid matter outlet (11),

a conveyor auger (5) axially aligned inside said first tank (31) for transporting said oil contaminated sludge masses from said sludge inlet (1) towards said solid matter outlet (H),

a heating element (13) arranged for directly or indirectly heating at least at a lower part of said tank (31),

wherein said conveyor auger (5) comprises a shaft (5a) with radial arms (53) each provided with a conveyor blade pair (52) with a first and second conveyor blade (54, 56), wherein said conveyor blade pair (52) is arranged with a mutual gap for holding between them a portion of sludge mass, and the outer ends of said blade pair (52) having a gap towards the inner surface of said (inner) tank (31).

Otherwise the sludge separator of this definition may have one or more of each feature described above.

CLAIMS

1. A sludge separator (0) for oil contaminated sludge masses, the sludge separator (0) comprising:

- a first cylindrical, inner tank (31) comprising:
  - a sludge inlet (1),
  - a first evaporated gas outlet (7);
  - a solid matter outlet (11),
- a conveyor auger (5) axially aligned inside said first, inner tank (31) for transporting said oil contaminated sludge masses from said sludge inlet (1) towards said solid matter outlet (11), said conveyor auger comprising an axially extending shaft (5a),
- a second cylindrical, outer tank (33) at least partially enclosing said first, inner tank (31) such that a cavity (35) is formed around said first, inner tank (31),
- a heating element (13) arranged at least at a lower part of said second, outer tank (33), characterized in that
- said cavity (35), in an operative state of said sludge separator, is filled with smelted Lead (Pb) so as for distributing heat over said first, inner tank's (31) surface (31i) and in that said conveyor auger (5) comprises a plurality of radially extending arms (53), and each arm (53) is provided with a conveyor blade pair (52) with a first and second conveyor blade (54, 56), wherein the first conveyor blade (54) is arranged at a distance with respect to the second conveyor blade (56) and wherein said conveyor blade pair (52) is arranged at outer ends of said arms (53).

2. The sludge separator (0) according to claim 1, wherein said first, inner tank (31) is asymmetrically arranged in said second, outer tank (33) such that said cavity (35) is wider at a bottom portion and narrower at a top portion of said cavity (35).

3. The sludge separator (0) according to claim 2, wherein said cavity (35) is 4 cm wide at the bottom and 1 cm wide at the top, and wherein a diameter of said first, inner tank (31) is 1200 mm.

4. The sludge separator (0) according to any of the preceding claims, wherein said conveyor auger (5) is arranged for distributing said oil contaminated sludge masses by smearing the masses peripherally around an inner surface (31i) of said first, inner tank (31).

5. The sludge separator (0) according to any of the preceding claims, wherein the shaft (5a) of the conveyor auger (5) has a first end arranged near said inlet (1) and a second end arranged near said solid matter outlet (11).

6. The sludge separator (0) according to any of the preceding claims, wherein said conveyor auger rotation speed is 10 - 60 rotations per minutes.

7. The sludge separator (0) according to any of the preceding claims, wherein conveyor blades (54, 56) have adjustable attack angle.

8. The sludge separator (0) according to any of the preceding claims, further comprising a Lead inlet for feeding Lead into said cavity (35), wherein said Lead inlet is directed upwardly from said cavity (35).

9. The sludge separator (0) according to any of the preceding claims, further comprises an Argon (Ar) inlet for feeding Argon under over pressure into said cavity (35).

10. The sludge separator (0) according to claim 8 and 9, wherein said Lead inlet and said Argon inlet are arranged into a same portion of said cavity (35).

11. The sludge separator (0) according to any of the preceding claims, further comprises an observation window to see level and state of Lead inside the cavity (35).

12. The sludge separator (0) according to any of the preceding claims, wherein the level of smelted Lead inside said cavity (35) is above the top of the first, inner tank (31) and preferably also the top of the second, outer tank (33).

13. The sludge separator (0) according to any of the preceding claims, further comprises a second, safety gas outlet (71), connected to the first, inner tank (31), with a burst disc for mitigating explosions inside said first, inner tank (31).

14. The sludge separator (0) according to any of the preceding claims, further comprises an insulation layer (39) at least partially covering said second, outer tank (33).

15. The sludge separator (0) according to any of the preceding claims, wherein said heating element (13) covers a bottom surface sector of said second, outer tank's (33) surface (33i).

16. The sludge separator (0) according to claim 15, wherein said heating element (13) covers a bottom surface sector of one third of said second, outer tank's (33) surface (33i).

17. The sludge separator (0) according to claim 15 or 16, wherein said heating element (13) in the bottom is slightly angularly asymmetrically arranged in order to drive the convection automatically.

18. The sludge separator (0) according to any of the claims 15 - 17, wherein said insulation layer covers the remaining surfaces of the second, outer tank's (33) surface (33i).

19. The sludge separator (0) according to any of the preceding claims, wherein said heating element (13) is subdivided into a plurality of sub heating elements (13a, b, c, d) such that the heating element temperature can be controlled independently.

20. The sludge separator (0) according to claim 19, wherein said sub heating elements (13a, b, c, d) near said inlet (1) provide higher heating power than sub heating elements (13a, b, c, d) near said solid matter outlet (11).

21. The sludge separator (0) according to any of the preceding claims, wherein said heating element (13) is heating the first tank at a higher temperature than the melting point of Lead and below the boiling point of Lead.

22. The sludge separator (0) according to any of the preceding claims, wherein said first evaporated gas outlet is arranged near a top portion of said first, inner tank (31).

23. A sludge solids / liquid separation method for oil contaminated sludge masses, wherein the method comprises the steps of:

- feeding oil contaminated sludge via an inlet (1) into a first end of a first, cylindrical inner tank (31),
- transporting said oil contaminated sludge masses from said inlet (1) of said cylindrical inner tank (31) to an oppositely arranged outlet (11) by a rotating conveyor auger (5)

having an axially extending shaft (5a) and smearing said sludge peripherally around an inner surface (31i) of said first, inner tank (31) by means of a conveyor blade pair (52) with a first and second conveyor blade (54, 56), wherein the first conveyor blade (54) is arranged at a distance with respect to the second conveyor blade (56) and wherein said conveyor blade pair (52) is arranged at outer end of each arm (53) of a plurality of radially extending arms, while at the same time heating said oil contaminated sludge by evenly heating the whole surface of said inner tank (31) by molten Lead surrounding the entire inner tank (31), thereby gradually evaporating water and oil gas from solid matter of the sludge,

- removing said petroleum gas and water vapour via a first gas outlet (7),
- removing decontaminated solid matter via a solid matter outlet (11) opposite of said inlet (1); and
- processing said removed oil gas and water vapour in a gas separator.

24. The method according to claim 23, wherein heating the whole surface of said inner tank (31) by molten Lead comprises heating an outer tank (33) containing the molten Lead surrounding said inner tank (31).

25. The method according to claim 24, wherein heating said outer tank (33) comprises heating at least a bottom portion of said outer tank (33) for driving convection of said molten Lead automatically.

26. The method according to any one of the claims 23 - 25, wherein transporting said oil contaminated sludge comprises rotating said rotating conveyor auger (5) at a rotation speed of 10 - 60 rotations per minutes.

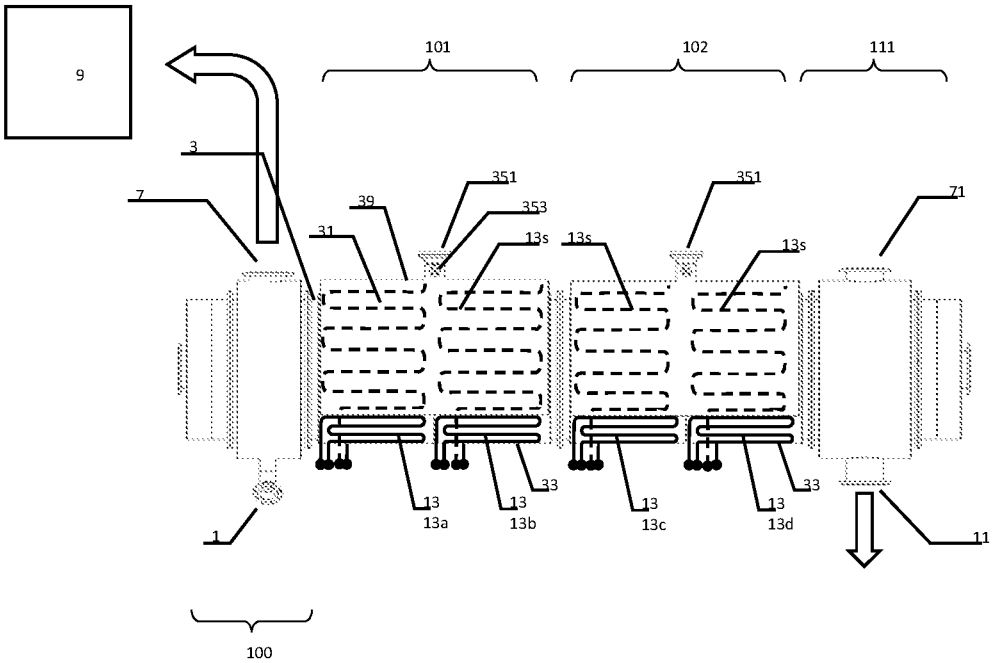
9
101
102
111
3
7
39
351
353
31
13s
13s
351
13s
71
33
33
13
13a
13
13b
13
13c
13
13d
1
11
100

Fig. 1

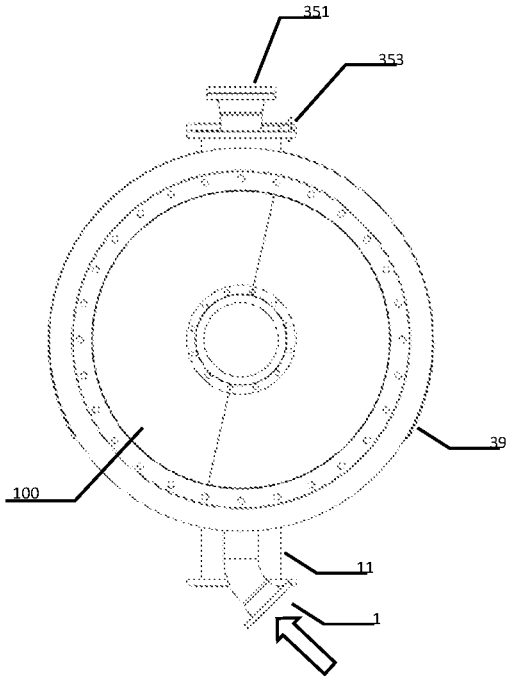

Fig. 2

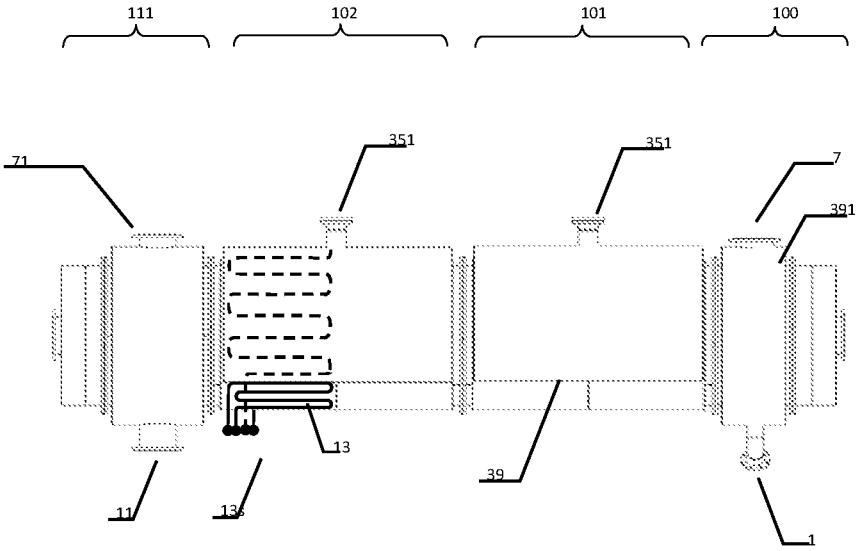

Fig. 3

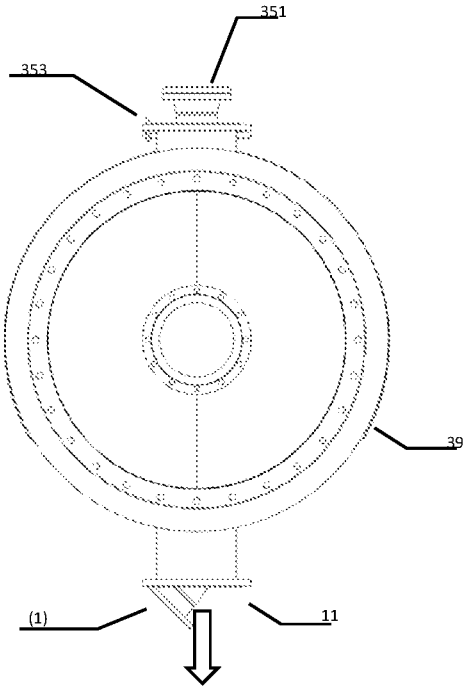

Fig. 4

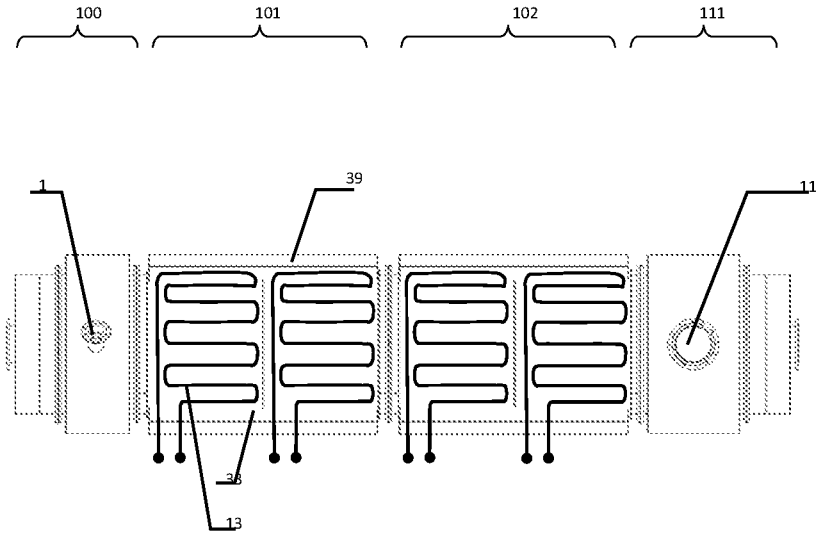

Fig. 5

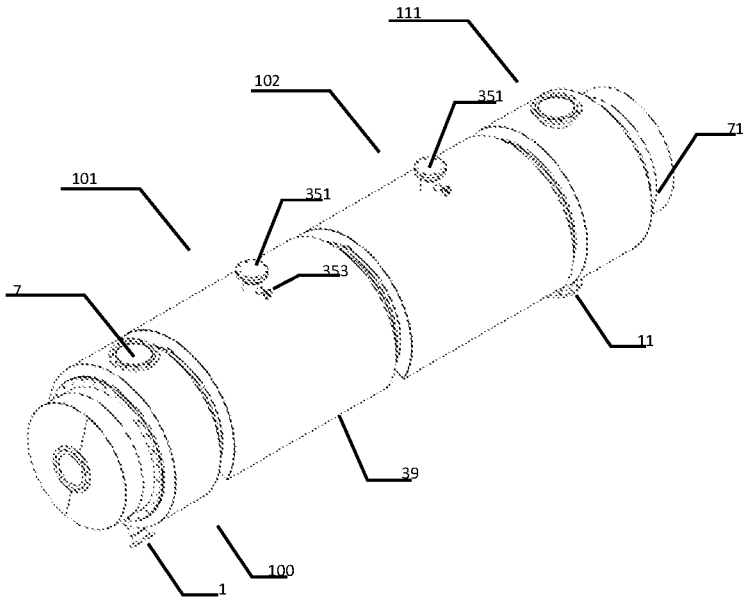

Fig. 6

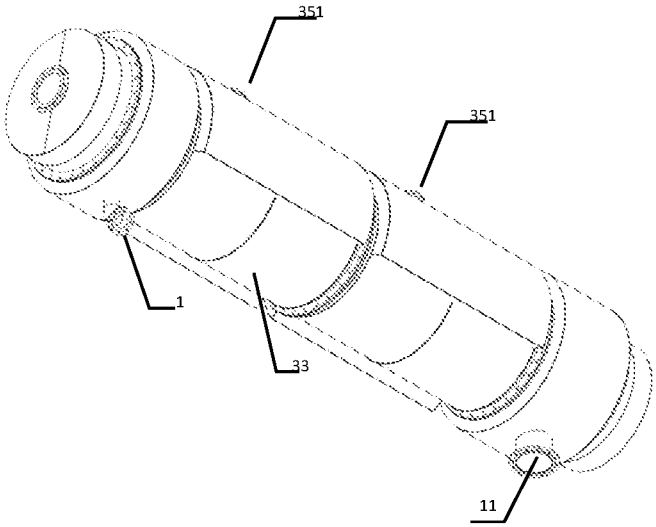

Fig. 7

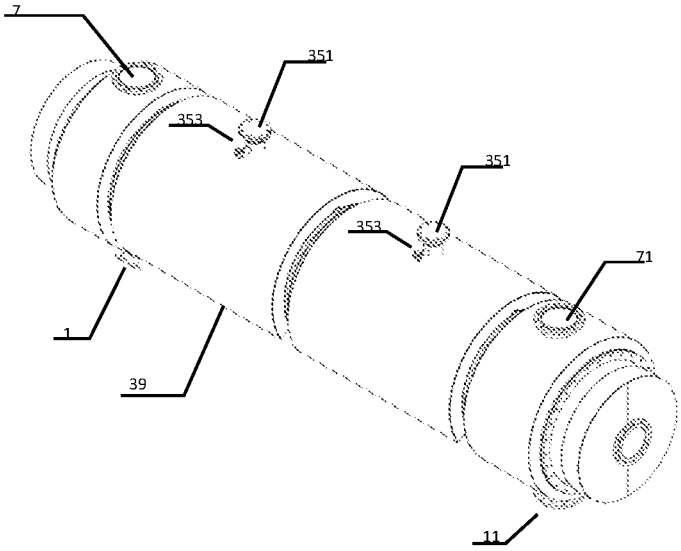

Fig. 8

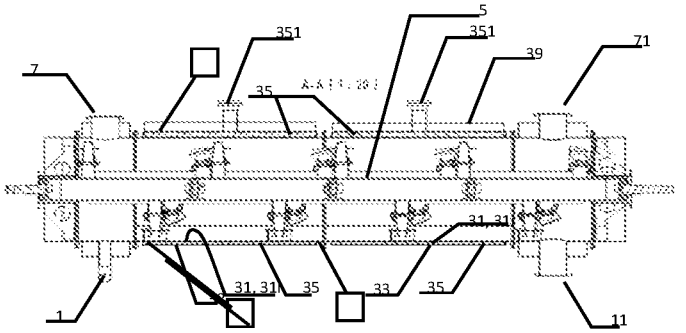

Fig. 9

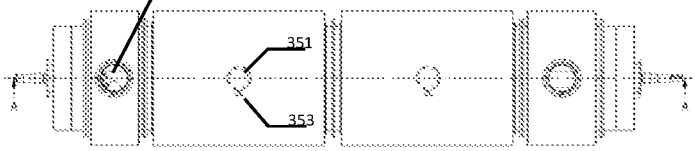

Fig. 10

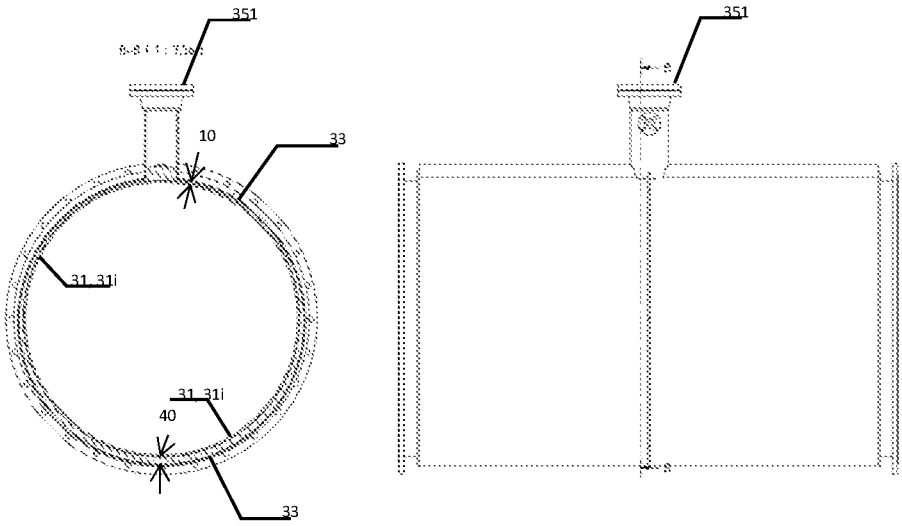

Fig. 11

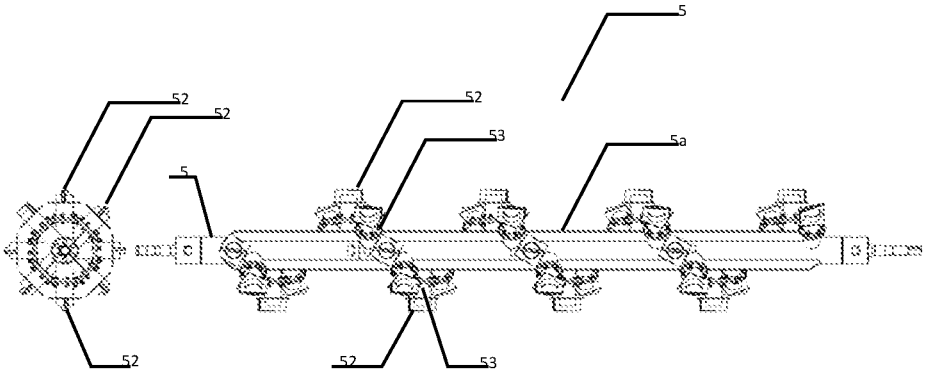

Fig. 12

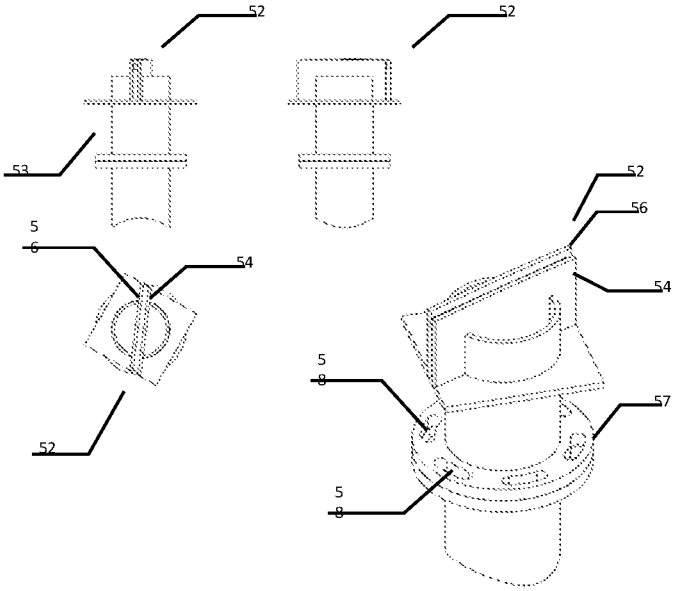

Fig. 13

INTERNATIONAL SEARCH REPORT

International application No
PCT/NO2020/050 154

A. CLASSIFICATION OF SUBJECT MATTER

INV. B01D 1/00 B01D 1/22 B01D 1/24 C02F 11/13 E21B 21/06
F26B 3/20 F26B 3/24 F26B 17/20
ADD. C02F 10 1/32 C02F 103/10

According to International Patent Classification (IPC) or to both national classification and IPC

B. FIELDS SEARCHED

Minimum documentation searched (classification system followed by classification symbols)

B01J B01D C02F E21B F26B

Documentation searched other than minimum documentation to the extent that such documents are included in the fields searched

Electronic data base consulted during the international search (name of data base and, where practicable, search terms used)

EPO-Internal, WPI Data

C. DOCUMENTS CONSIDERED TO BE RELEVANT

Category*	Citation of document, with indication, where appropriate, of the relevant passages	Relevant to claim No.
A	US 2019/071340 A1 (IMRIE GEORGE GRAHAM [GB]) 7 March 2019 (2019-03-07) figures 1,2 paragraph [0087] - paragraph [0140] -----	1-26
A	GB 205 906 A (WOODALL DUCKHAM & JONES 1920 L; ARTHUR MCDOUGALL DUCKHAM) 29 October 1923 (1923-10-29) figure 1 page 2, line 35 - line 86 -----	1-26
A	US 2 510 057 A (BAKER STANLEY L ET AL) 6 June 1950 (1950-06-06) figures 1,2 column 1, line 21 - line 25 -----	1-26
A	JP 2018 153768 A (MEIJI CO LTD) 4 October 2018 (2018-10-04) figures 7-8 -----	1-26

☐ Further documents are listed in the continuation of Box C.

☒ See patent family annex.

* Special categories of cited documents :

"A" document defining the general state of the art which is not considered to be of particular relevance

"E" earlier application or patent but published on or after the international filing date

"L" document which may throw doubts on priority claim(s) orwhich is cited to establish the publication date of another citation or other special reason (as specified)

"O" document referring to an oral disclosure, use, exhibition or other means

"P" document published prior to the international filing date but later than the priority date claimed

"T" later document published after the international filing date or priority date and not in conflict with the application but cited to understand the principle or theory underlying the invention

"X" document of particular relevance; the claimed invention cannot be considered novel or cannot be considered to involve an inventive step when the document is taken alone

"Y" document of particular relevance; the claimed invention cannot be considered to involve an inventive step when the document is combined with one or more other such documents, such combination being obvious to a person skilled in the art

"&" document member of the same patent family

Date of the actual completion of the international search	Date of mailing of the international search report
7 September 2020	21/09/2020

Name and mailing address of the ISA/	Authorized officer
European Patent Office, P.B. 5818 Patentlaan 2 NL - 2280 HV Rijswijk Tel. (+31-70) 340-2040, Fax: (+31-70) 340-3016	Châtellier, Xavier

INTERNATIONAL SEARCH REPORT

Information on patent family members

International application No
PCT/NO2020/050154

Patent document cited in search report	Publication date	Patent family member(s)	Publication date
US 2019071340 A1	07-03-2019	EP 3426612 A1	16-01-2019
		GB 2548243 A	13-09-2017
		US 2019071340 A1	07-03-2019
		WO 2017153733 A1	14-09-2017
GB 205906 A	29-10-1923	NONE	
US 2510057 A	06-06-1950	NONE	
JP 2018153768 A	04-10-2018	NONE	