Oct. 27, 1931. G. HILGER 1,829,517

AUTOMATIC VALVE

Filed July 11, 1928

FIG. 1

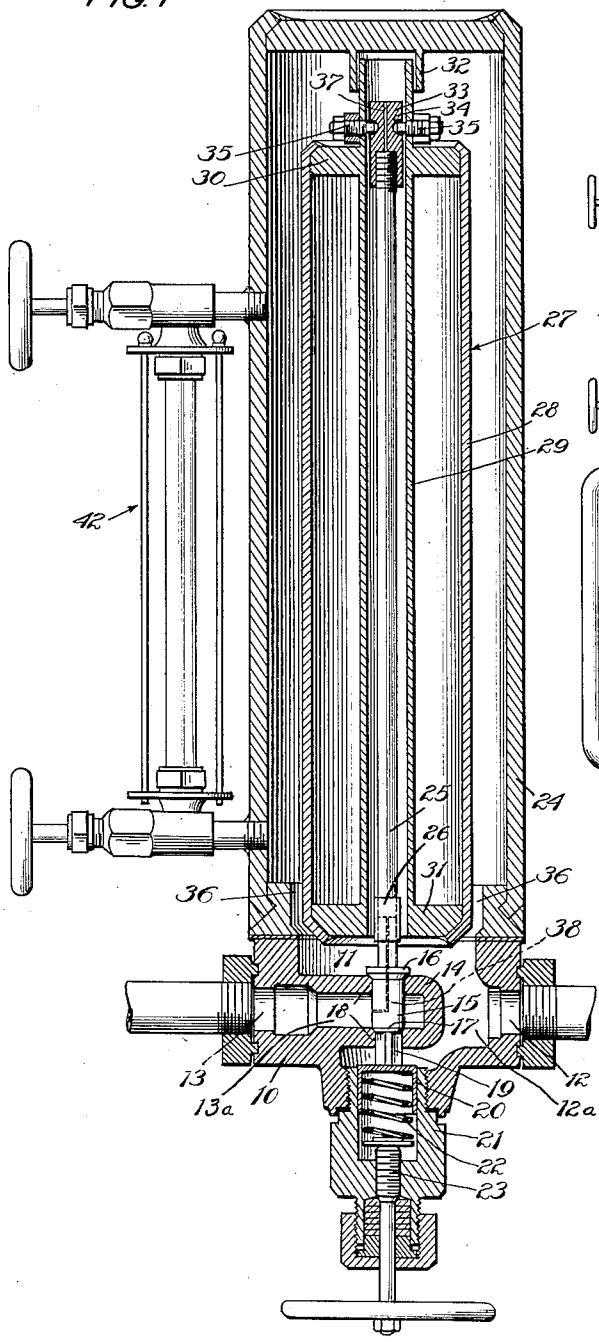

FIG. 2

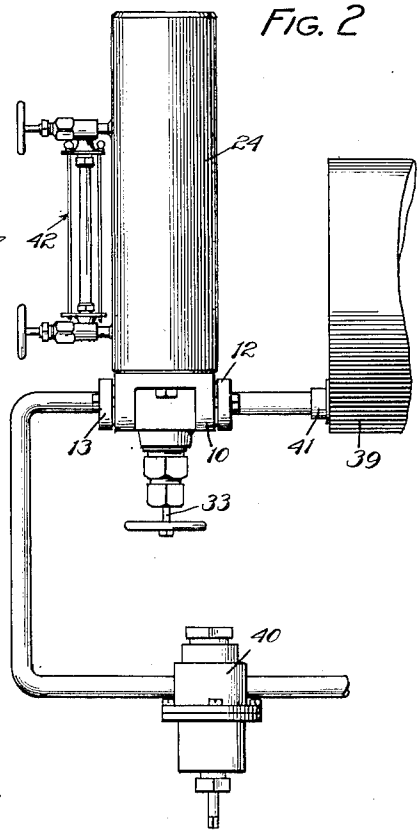

FIG. 3

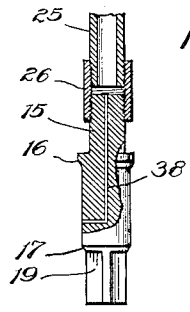

Inventor
George Hilger
By Churchill Parker Carlson
Attys

Patented Oct. 27, 1931

1,829,517

UNITED STATES PATENT OFFICE

GEORGE HILGER, OF CHICAGO, ILLINOIS

AUTOMATIC VALVE

Application filed July 11, 1928. Serial No. 291,746.

The present invention relates to automatic control valves and has more particular reference to control valves operated by the flow of liquid therethrough.

In the operation of ordinary refrigeration systems, it sometimes happens that the water supply to the condenser is cut off or that the evaporating coils draw more refrigerant from the receiver than the condenser is capable of liquefying. Under such conditions, the refrigerant will be supplied to the expansion valve as a gas rather than as a liquid, and its cooling effect after expansion will be very small.

The system will therefore operate inefficiently as long as gaseous refrigerant is supplied to the expansion valve, and this condition may continue for a substantial length of time before being detected. It is desirable, therefore, to close off the receiver automatically as soon as the supply of liquid refrigerant therein has been exhausted and to hold it closed until normal operation can be resumed.

An important object of the present invention, therefore, is to provide a new and improved valve for a system containing a condensible fluid which will operate automatically to pass only liquid through the system.

As applied more particularly to ordinary refrigeration systems using ammonia or other readily condensible refrigerant, the invention aims to provide a valve for controlling the flow of refrigerant from the receiver outlet which automatically will be rapidly closed as soon as substantially all of the liquid has been drawn from the receiver so that gas instead of liquid is drawn from the receiver and which will also open automatically to permit normal operation of the system when liquefied refrigerant is again available in the receiver.

Other objects and advantages will become apparent from the following detailed description of the invention taken in connection with the accompanying drawings, in which:

Figure 1 is a fragmentary view of the valve in vertical section.

Fig. 2 is an elevational view of my improved valve interposed between the liquid receiver and the expansion valve in an ordinary refrigeration system.

Fig. 3 is an enlarged fragmentary view partially in section of a detail of the valve.

While I have shown in the drawings and will herein describe the preferred embodiment of the invention, it is to be understood that I do not intend thereby to be limited to the form disclosed but aim to cover all modifications and alternative constructions falling within the spirit and scope of the invention as expressed in the appended claims.

In attaining the objects of the invention a valve is interposed in the refrigeration system preferably between the receiver outlet and the expansion valve, which valve normally is maintained in open position by the passage of liquid refrigerant through the valve but which closes automatically upon the passage of any appreciable amount of gaseous refrigerant through the valve. While in accomplishing this, the valve preferably employed resembles in some respects valves of the float type, it differs therefrom in an important feature, namely, in that means is provided which maintains the valve in either open or closed position, which means is operable by a slight fluctuation in the level of a suspended column of liquid to move the valve immediately to the other position. The immediate movement of the valve from one position to another prevents wiredrawing of the fluid through the valve which would occur were the valve to "float" or move gradually to either position as occurs in the ordinary float type valve.

Since, at irregular intervals, gas will enter the float valve, thereby closing the valve, means is provided in the valve which permits a relatively slow passage of the accumulated gas from the valve casing to the outlet therefrom when the valve is closed. Thus, when the valve is closed, a difference in pressure between the upper interior portion of the casing and the inlet thereto is established and maintained, which permits a steady flow from the receiver to the valve in order to increase the fluid column in the casing and

open the valve when fluid refrigerant is again available in the receiver.

More particularly described, in the exemplary embodiment of the invention as shown herein, 10 designates generally an ordinary well-known type of valve casing providing a chamber 11 and having an inlet passage 12 and an outlet passage 13. The inlet and outlet passages are separated by an internal partition which divides the interior of the casing into inlet and outlet chambers 12^a and 13^a. In the exemplary form shown herein the partition is formed to provide an enclosure having vertically disposed parallel walls, which enclosure communicates with the outlet 13.

Communication between the chambers is controlled by a vertically movable valve member which comprises in the present instance a cylindrical stem 15 having a flaring portion 16 with a relatively large area perpendicular to the stem 15 said flaring portion being so positioned that pressure on said area tends to maintain the valve closed when the valve is seated but allows the pressure to be equalized when the valve leaves the seat and a beveled portion 17 arranged suitably to be seated on the parallel walls of the partition to close ports 18 therein. The character of the valve is preferably such that the ports through the partition may be opened or closed by relatively small movement of the valve member.

At its lower end the valve stem 15 carries a spider 19 which engages a plunger 20 slidably mounted in a cylindrical head 21 closing the lower end of the valve casing. A compression spring 22 acting upwardly on the plunger tends to hold the valve member in its raised or open position, the force applied by the spring being variable by such means as the manually operable screw 23.

Mounted upon the valve casing is a cylindrical casing 24 providing a float chamber which communicates with the valve chamber 11 through the open end of the cylindrical casing. Preferably a continuation of the valve stem 15 is, in effect provided by connecting the upper end of the valve stem with one end of a pipe or tubular stem 25 in any suitable manner as by the sleeve 26, so that the stem extends upwardly from the valve stem substantially centrally through the cylindrical casing 24.

As a means for automatically opening and closing the valve, a float member 27 is suspended from the upper end of the tubular stem 25 in such manner that the float in moving vertically carries the stem with it. To this end the float is constructed in the form of a hollow cylindrical member having a cylindrical outer wall 28, a concentric inner wall in the form of a tube 29, and upper and lower heads 30 and 31 rigidly secured together. The tube 29 extends substantially axially of the float and is of sufficient diameter to receive the stem 25 very loosely therein, the arrangement of parts being substantially concentric with the cylindrical casing 24. The tube 29 of the float projects upwardly beyond the upper head 30 into loose engagement with a tubular guide 32 appropriately positioned on the head of the cylindrical casing.

Preferably the connection between the tubular stem 25 and the float member 27 is one which prevents relative longitudinal movement between the stem and float but permits relative rotational and limited swinging movement therebetween. Such a means in the present instance comprises a nipple 33 screw threaded upon the upper end of the tubular stem 25 which nipple is provided with an annular groove 34 formed in the surface thereof. The annular groove is arranged to be engaged by the inner ends of a pair of diametrically opposed screws 35 which are carried by and have an adjustable screw threaded engagement with the projecting end of the tube 29 of the float member.

This manner of connecting the float and the valve operating stem permits a slight looseness or relative movement therebetween which insures that the valve will be free to seat each time the valve is closed. Moreover this looseness prevents damage or injury to the parts which might occur in shipping or in assembling the valve in the refrigerating system. Preferably the disposition of parts in mounting the float upon the stem is such that the lower end of the float is positioned substantially within and concentric of the lower open end of the cylindrical casing 24 thus providing a narrow passageway 36 leading between the inlet side of the valve and the interior of the casing. The clearance between the tube 29 of the float and the stem 25 also permits liquid to occupy the space between the tube and the stem.

The means by which a difference in pressure between the upper interior portion of the casing and the inlet is maintained while the valve is closed comprises in this embodiment the provision of a communicating passageway between the upper part of the cylindrical casing and the outlet 13 of the valve. To this end an axial bore 37 through the nipple 33 on the upper end of the tubular stem connects the interior of the upper portion of the casing with the tubular stem and a suitably formed passageway 38 in the valve stem connects the discharge chamber 13^a in the casing with the interior of the tubular stem.

The utility of my improved control valve will best be understood by describing its operation in an ordinary refrigeration system. As shown in Fig. 2, the valve, as preferably used in refrigeration systems employing ammonia or other readily condensible refrigerant, is interposed at a point between the liquid receiver 39 and the expansion valve 40,

the inlet side of the valve being connected to the receiver outlet 41.

When the refrigerating system is in its normal condition the receiver is substantially filled with liquid refrigerant under pressure. The valve casing is also filled with liquid and the cylindrical casing thereon is partially filled through the passageway 36 only to the predetermined level necessary to hold the float and the valve in raised position. Liquid refrigerant will then flow through the valve to the expansion valve of the system, while the liquid buoying the float in the cylindrical casing is held in suspension to maintain equilibrium of the parts. If desired a well known type of liquid level gauge generally designated at 42 may be provided to indicate the level of liquid refrigerant in the casing 24.

This condition of equilibrium will exist as along as there is a supply of liquid within the receiver, it being apparent that the pressure in the receiver will be sufficient to support the column of liquid in the valve structure including the cylindrical casing 24, regardless of differences in level between the receiver and the valve.

Now assuming that the evaporating coils of the system draw more refrigerant from the receiver than the condenser is capable of liquefying; under such conditions, the supply of liquid in the receiver will become exhausted and gaseous refrigerant at compressor pressure will flow into the valve chamber 11. When this occurs, the gaseous refrigerant will bubble upwardly through the passageway 36 into the cylindrical casing 24 and in a short time will displace sufficient of the liquid refrigerant therein to overcome the operative equilibrium and effect a lowering of the float and a closing of the valve. Inasmuch as the valve moves only a short distance in closing a slight variation of the liquid from its normal level insures that the closing will not take place gradually but will close positively and firmly when the weight of the valve overcomes the spring tension. As an illustration of this action it has been found in practice that a valve having a vertical displacement of approximately one quarter of an inch between the open and closed positions thereof functions rapidly and efficiently and it will be seen that only a very slight variation of the liquid level from its normal height is necessary to cause the valve to function. Thus the flow of refrigerant to the expansion coil will be quickly and automatically shut off as soon as gaseous refrigerant from the receiver enters the valve inlet and sufficiently reduces the level of the suspended liquid in the casing. After the valve has closed the liquid column in the casing will be held in suspension so that only a small quantity of fluid is needed to reopen the valve.

Since, in the closed position of the valve, the discharge chamber is at a lower pressure than the inlet chamber, the communication of the discharge chamber with the upper portion of the interior of the casing, through the bores 37 and 38 and the stem 25, substantially equalizes the pressures therebetween. This produces a lower pressure in the upper portion of the casing interior relative to the inlet chamber and permits a constant flow from the receiver to the valve when the valve is closed. Thus while liquid refrigerant is accumulating in the receiver gas therefrom will flow slowly through the valve. However, as may be seen in Fig. 3, the bore 38 is preferably restricted in order to prevent a too rapid flow which would impair the efficiency of the system.

As soon as sufficient liquid has accumulated in the receiver to cover the outlet opening 41 therefrom, liquid refrigerant will pass to the valve and into the casing 24 to raise the height of the suspended column of liquid therein and open the valve. Thus the valve is automatically opened and will remain open until the liquid receiver may again become empty permitting the admission of gaseous refrigerant to the valve casing again closing the valve.

The control valve thus provided is extremely simple in construction and positive and rapid in its operation. It is opened and closed entirely automatically under conditions existing within the system to which it is applied, and therefore operates to maintain efficient operation of the system as a whole.

I claim as my invention:

1. In a refrigeration system, the combination with a source of refrigerant supply and an expansion valve, of means for controlling the flow of liquid refrigerant to said expansion valve, comprising a casing having a passage therethrough, means providing a float chamber above said passage and in communication therewith, a float responsive to the level of liquid refrigerant in said chamber for opening and closing said passage, means permitting access of gas to the upper part of said float chamber to effect a closing of said passage by said float, and means connecting the upper end of said float chamber with the outlet side of said passage whereby slowly to exhaust the gas from said chamber.

2. A control valve comprising, in combination, a valve casing having inlet and outlet passages, an internal partition separating said passages and having a port therethrough establishing communication between said passages, a vertically movable valve member adapted to be seated in said port, a second casing mounted upon and above said first casing and communicating with the inlet passage of said first casing, a hollow stem rigidly connected to said valve member and extending vertically into said second casing, an

elongated float secured to said stem, and means providing communication between the chamber adjacent the upper end of the stem and the outlet passage.

3. In a refrigerating system, the combination of a source of refrigerant adapted normally to supply liquid refrigerant under pressure, an expansion valve, and means for controlling the flow of refrigerant from said source to said expansion valve comprising a casing having a passage therethrough, a movable valve member in said casing controlling said passage, a float chamber above said valve, and a float in said chamber connected with said valve member to move it, said float chamber being formed to communicate with the upper part of said valve casing through a restricted opening on the inlet side of said valve member.

4. In a refrigerating system having a source of refrigerant and an expansion valve, the combination of means for controlling the flow of refrigerant from said source to said expansion valve comprising a casing having a passage therethrough, a valve member in said casing for controlling said passage, a float chamber above said casing communicating therewith on the inlet side of said valve member, a float in said chamber connected to said valve to open and close the same, the lower end of said float being formed to cooperate with the walls of said float chamber to provide a restricted passage between said chamber and said casing, and means connecting the upper end of said float chamber with the outlet side of said passage whereby slowly to exhaust gas from the upper part of said chamber.

In testimony whereof, I have hereunto affixed my signature.

GEORGE HILGER.