A. ROACH.

ACETYLENE LAMP.

APPLICATION FILED FEB. 1, 1913.

1,068,931. Patented July 29, 1913.

Fig. 2

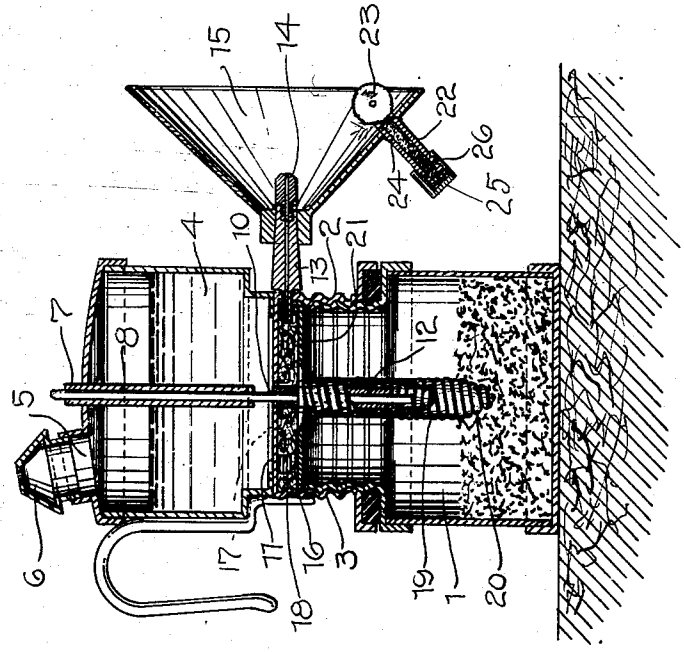

Fig. 1

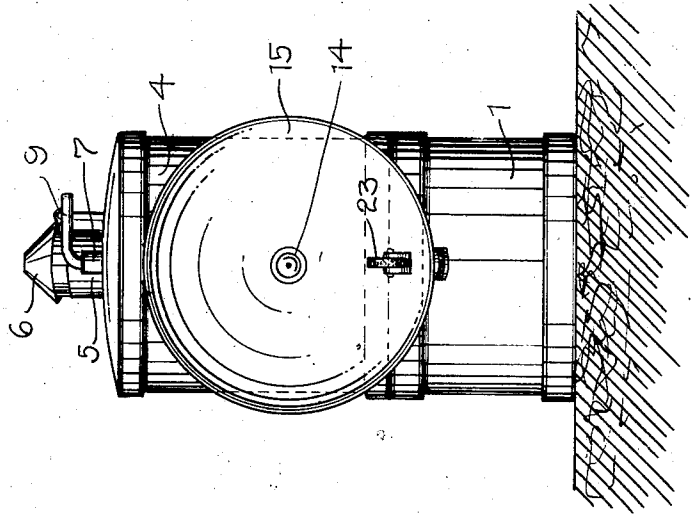

Inventor

A. Roach

Witnesses

Robert M. Sutphen

A. L. Hind.

By Watson E. Coleman

Attorney

UNITED STATES PATENT OFFICE.

ALONZO ROACH, OF LINTON, INDIANA.

ACETYLENE-LAMP.

1,068,931. Specification of Letters Patent. Patented July 29, 1913.

Application filed February 1, 1913. Serial No. 745,677.

To all whom it may concern:

Be it known that I, ALONZO ROACH, a citizen of the United States, residing at Linton, in the county of Greene and State of Indiana, have invented certain new and useful Improvements in Acetylene-Lamps, of which the following is a specification, reference being had to the accompanying drawings.

This invention relates to improvements in lamps, and more particularly to that class of lamps in which acetylene gas is the fuel which is burned.

This lamp is particularly adapted for use by miners, but may be used for many other purposes such as vehicle lamps or the like.

An object of the invention is the provision of a lamp of this character which is provided with an improved form of water distributer so that the water will be equally distributed to the carbid.

A further object of this invention is the provision of means for straining the gas generated by the water and carbid to prevent any foreign matter from passing into the outlet tube, and rendering the lamp inoperative.

With these and other objects in view, as will become more apparent as the description proceeds, my invention consists in certain constructions, combinations, and arrangements of parts to be hereinafter more fully described, claimed and illustrated in the accompanying drawing, in which—

Figure 1 is a front elevation of my device, and Fig. 2 is a vertical section thereof.

Referring more particularly to the drawings, the numeral 1 designates the carbid container which is formed with a threaded neck 2 for engagement with the threaded flange 3 of the water reservoir 4. The water reservoir is formed with a filling opening 5 which is suitably closed by a hingedly mounted vent cap 6. A neck 7 is formed on the top of the water reservoir, and disposed through the opening in the neck is a rod 8, the upper end of which is offset, as at 9, to form a handle. A central opening 10 is formed in the base plate 11 of the reservoir, and depending from the opening is a tube 12 in which the lower end of the rod 8 is slidably disposed. Extending through the flange 3 near the base plate 11 is a gas outlet tube 13, in the outer end of which is threadably disposed a burner tip 14, and a suitable reflector 15 is secured to the end of the outlet tube.

A cover plate 16 having a central opening 17, is slidably disposed on the tube 12, the plate being of substantially the same diameter as the flange 3 to prevent the carbid from entering the outlet tube 13. Secured to the bottom plate 10 at a point diametrically opposite the outlet tube 13, is a loop 18, the plate 16 being adapted to rest against the inner end of the tube 13 and the loop 18 so that the plate will be maintained in a horizontal position within the flange by the neck of the carbid container. Connected to the cover plate 16 and adapted to surround the opening 17 therein, is a depending water distributer 19, the distributer comprising a coiled wire which is tapered, as at 20, at the lower end thereof. The coils of the wire are slightly spaced to allow water from the reservoir to drain therethrough, thereby equally distributing the water to the carbid. A disk of felt or other suitable fibrous material 21 is disposed between the cover plate 16 and the bottom plate 11 of the water reservoir to strain the gas before it enters the outlet tube, and thereby prevent the tube from becoming clogged and rendering the lamp inoperative.

If desired, an automatic sparking device may be secured in the reflector 15 below the burner 14, so that the use of matches to light the lamp will be unnecessary. The lighter consists of a hollow plug 22 which is secured in the wall of the reflector, the inner end of the plug being bifurcated, for the reception of a rotatably mounted abrasive wheel 23. Disposed in the hollow end of the plug is a spark producing stick of material 24, and a follower nut 25 is threadedly disposed on the end of the plug to feed the stick 24 against the wall 23. If desired, a spring 26 may be disposed between the nut and the stick so that the tension of the spring may be regulated by adjusting the nut, whereby the spring will normally maintain the stick in engagement with the wheel.

In the practical use of my lamp, the water reservoir is filled with water through the filling opening 5, and carbid is placed in the container 1, whereupon the reservoir and container are connected. Upon raising the rod 8 the water will be allowed to flow through the pipe 12 into the distributer 19, and as the lower end of the distributer is

adapted to rest in the carbid, the water will be equally distributed thereto through the convolutions of the spring. The gas upon being generated, will pass between the convolutions of the spring and thence upwardly through the opening 17 in the bottom plate 16, whereupon it will pass through the disk 21 into the outlet tube 13 to the burner. Upon rotation of the wheel 23, sparks will be produced by reason of the frictional engagement between the periphery of the wall and the end of the stick 24 and the gas will be automatically lighted. Should the lower end of the water pipe 12 become clogged, it will only be necessary to move the rod 8 upwardly and downwardly to clear the opening and allow the water to pass freely into the carbid, through the spring 19.

What is claimed is:—

The combination with a lamp of the character described having a reflector surrounding the burner tip of the lamp, of a tube fixed at one of its ends to the wall of the reflector adjacent the outer edge thereof and extending rearwardly of the same and below the reflector, the fixed end of said tube being provided with spaced ears projecting inwardly from the reflector wall, an abrasive wheel rotatably mounted between said ears and having its axis disposed in a plane at right angles to the longitudinal axis of the reflector, the periphery of said wheel projecting beyond the plane of the outer edge of the reflector wall, a stick of sparking material slidably mounted in said tube, a spring arranged in the tube and bearing against the sparking stick to force the same into frictional engagement with the abrasive wheel, and a cap threaded upon the end of said tube to removably retain the spring therein and adjust the tension thereof.

In testimony whereof I hereunto affix my signature in the presence of two witnesses.

ALONZO ROACH.

Witnesses:
SQUIRE WALTERS,
FRANK J. OSHA.