US009091287B2

(12) **United States Patent**
Schraer

(10) **Patent No.: US 9,091,287 B2**
(45) **Date of Patent: Jul. 28, 2015**

(54) **WASHER, SCREW OR NUT WITH INCREASED COEFFICIENT OF FRICTION**

(75) Inventor: **Thorsten Schraer**, Jetzendorf (DE)

(73) Assignee: **RUIA GLOBAL FASTENERS AG** (DE)

(*) Notice: Subject to any disclaimer, the term of this patent is extended or adjusted under 35 U.S.C. 154(b) by 565 days.

(21) Appl. No.: **13/060,559**

(22) PCT Filed: **Aug. 24, 2009**

(86) PCT No.: **PCT/DE2009/050046**
§ 371 (c)(1),
(2), (4) Date: **Mar. 17, 2011**

(87) PCT Pub. No.: **WO2010/022720**
PCT Pub. Date: **Mar. 4, 2010**

(65) **Prior Publication Data**

US 2011/0158768 A1 Jun. 30, 2011

(30) **Foreign Application Priority Data**

Aug. 26, 2008 (DE) ..... 20 2008 011 371 U

(51) **Int. Cl.**
F16B 2/00 (2006.01)
F16B 39/282 (2006.01)
F16B 43/00 (2006.01)

(52) **U.S. Cl.**
CPC ***F16B 2/005*** (2013.01); ***F16B 39/282*** (2013.01); ***F16B 43/00*** (2013.01)

(58) **Field of Classification Search**
CPC F16B 2/005; F16B 39/282; F16B 43/00
USPC 411/161, 162, 369, 531, 533, 542, 960
See application file for complete search history.

(56) **References Cited**

U.S. PATENT DOCUMENTS

1,963,535	A *	6/1934	Trotter	411/156
3,030,997	A *	4/1962	Collins	411/301
3,168,321	A *	2/1965	Glicksman	277/637
3,241,422	A *	3/1966	Heimovics	411/371.1
3,332,464	A *	7/1967	Castel	411/155
3,399,589	A	9/1968	Breed	

(Continued)

FOREIGN PATENT DOCUMENTS

DE	33 29 967	A1 *	11/1984
DE	34 11 812	A1 *	7/1985

(Continued)

OTHER PUBLICATIONS

English translation of the International Preliminary Report on Patentability which issued in connection with International Application No. PCT/DE2009/050046.

(Continued)

Primary Examiner — Gay Ann Spahn
(74) *Attorney, Agent, or Firm* — Clark Hill PLC

(57) **ABSTRACT**

The invention relates to a washer (**10**), screw or nut having an end surface (**12**) which faces toward a workpiece, wherein the end surface (**12**) is provided with a concentric, annularly encircling web (**14**), and that region (**18**) of the end surface (**12**) which is situated outside the encircling web (**14**) tapers conically toward the web (**14**) from the outside, with the inclination from the outside to the inside being directed away from the workpiece.

4 Claims, 1 Drawing Sheet

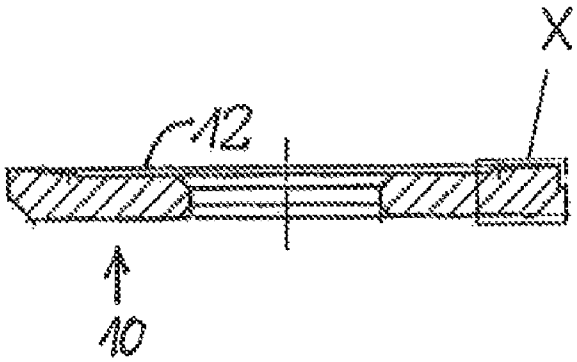

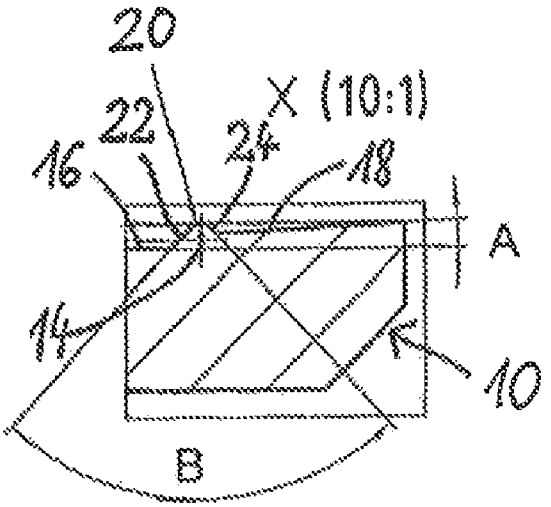

(56) **References Cited**

U.S. PATENT DOCUMENTS

3,476,009	A *	11/1969	Markey	411/11
3,531,850	A *	10/1970	Durand	411/160
3,606,357	A *	9/1971	Yonkers	411/537
3,618,444	A *	11/1971	Kay	411/373
3,628,584	A *	12/1971	Gutshall	411/155
3,659,491	A *	5/1972	Duffy et al.	411/436
3,678,979	A *	7/1972	Bjorklumd	411/134
3,680,619	A *	8/1972	Sparks	411/134
3,744,012	A *	7/1973	Gutshall	439/782
3,750,525	A *	8/1973	Waters et al.	411/34
3,856,066	A *	12/1974	Reynolds	411/155
3,882,752	A *	5/1975	Gutshall	411/371.1
4,103,725	A *	8/1978	Abe	411/160
4,292,876	A *	10/1981	De Graan	411/542
4,467,581	A *	8/1984	Francovitch	52/410
4,476,660	A *	10/1984	Francovitch	52/515
4,482,278	A *	11/1984	Dorn	411/377
4,686,808	A *	8/1987	Triplett	52/410
4,715,756	A *	12/1987	Danico et al.	411/369
4,749,321	A *	6/1988	Knohl et al.	411/371.1
4,749,322	A *	6/1988	Sygnator	411/387.3
4,875,818	A *	10/1989	Reinwall	411/369
4,884,932	A *	12/1989	Meyer	411/373
5,112,178	A *	5/1992	Overhues et al.	411/544
5,188,441	A *	2/1993	Rubel	305/180
5,205,692	A *	4/1993	Kelbert et al.	411/173
5,407,313	A *	4/1995	Bruins et al.	411/544
5,547,326	A *	8/1996	Overhues	411/544
5,658,108	A *	8/1997	Swick	411/368
5,743,691	A *	4/1998	Donovan	411/180
5,827,028	A *	10/1998	Swick	411/368
6,082,942	A *	7/2000	Swick	411/368
6,233,889	B1 *	5/2001	Hulsey	52/302.1
6,497,543	B1 *	12/2002	Lyons	411/171
7,192,232	B2 *	3/2007	Esser	411/161
7,818,940	B2 *	10/2010	Herb	52/704
7,857,566	B2 *	12/2010	Sullivan et al.	411/155
8,029,223	B2 *	10/2011	Mair	411/542
8,931,160	B2 *	1/2015	Shinjo	411/179
2004/0131443	A1 *	7/2004	Terry	411/161
2005/0286988	A1	12/2005	Harris	
2007/0212191	A1 *	9/2007	Nilsen et al.	411/162
2008/0148544	A1 *	6/2008	Shuart et al.	411/179
2010/0047037	A1 *	2/2010	Ishida et al.	411/427

FOREIGN PATENT DOCUMENTS

DE	92 01 686	U1	4/1992
DE	100 01 857	A1	7/2001
DE	697 07 099	T2	3/2002
DE	10 2004 006 628	A1	9/2005
GB	993 021	A	5/1965
JP	06-010936		1/1994
JP	08-042551		2/1996
JP	2001317529		11/2001
JP	3404585		3/2003
KR	10-2006-0041209		5/2006
WO	00/77410		12/2000
WO	2008/066031	A1	6/2008

OTHER PUBLICATIONS

Search Report of the German Patent and Trademark Office which issued in connection with corresponding German Patent Application No. 20 2008 011 371.7 on Jul. 17, 2009.

International Search Report which issued in connection with International Application No. PCT/DE2009/050046 on Jan. 21, 2010.

* cited by examiner

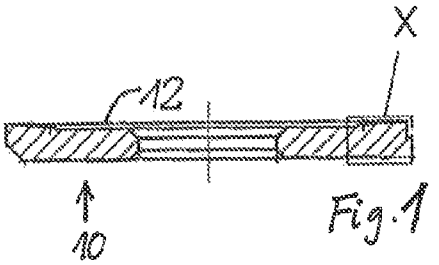

Fig. 1

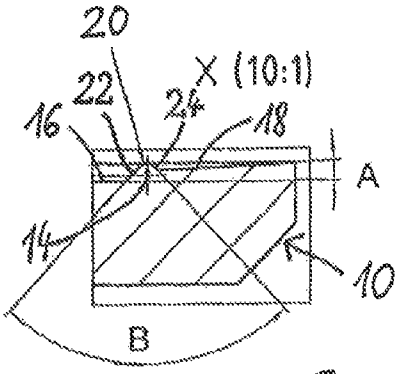

Fig. 2

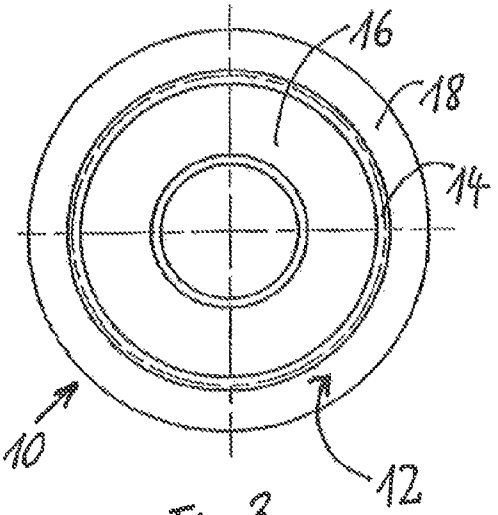

Fig. 3

WASHER, SCREW OR NUT WITH INCREASED COEFFICIENT OF FRICTION

RELATED/PRIORITY APPLICATION

This application is a National Phase filing regarding International Application No. PCT/DE 2009/050046, filed on Aug. 24, 2009, which relies upon German Application No. 20 2008 011 371.7, filed on Aug. 26, 2008, for priority.

TECHNICAL FIELD

The present invention relates to a washer, screw or nut having an end face which faces a workpiece and on which it is provided with a profile which increases the coefficient of friction.

PRIOR ART

In the automotive industry, the problem is becoming more and more frequent whereby the constructional space available for connecting members is becoming smaller and the forces to be transmitted are increasing because of higher vehicle performances and higher requirements. In this context some connections, such as strut bars, push rods, lateral shock absorbers, etc., are mainly acted on by transverse forces. To be able to absorb larger transverse forces (F_T), a higher clamping force (F_C) or a higher coefficient of friction (μ_T) is required, in accordance with the formula $F_C=F_T/\mu_T$.

A higher clamping force can only be achieved by way of a larger screw prestressing force. In turn, this can only be achieved by way of a larger screw size or by screwing in until the yield point of the screw material is reached. If the space for a larger screw is not available, and screwing in until the yield point is reached is not safe, the only remaining option is to increase the coefficient of friction.

In the known prior art, this is attempted in some types of application, such as pulleys etc., by way of additional members, such as diamond discs. However, this solution is expensive and elaborate because of the relatively expensive member and the additional component.

In the prior art, a washer with an end face facing a workpiece for improving the tightness of a screw connection is known from GB 993 021, said washer being provided with a concentric annularly encircling web, wherein the part of the end face outside of the encircling web tapers conically towards the web from the outside, and wherein the inclination from the outside to the inside is directed away from the workpiece.

A similar washer also for improving the tightness is known from DE 92 01 686 U1. In this case, however, a level end face with respect to the workpiece comprising a plurality of concentric annularly encircling webs is provided.

In contrast, WO 2008/066 031 A1 discloses a washer also serving as a seal and having a flat end face with respect to the workpiece which extends inclined at an angle of 60 to 89° from the outside to the inside relative to the axis of rotation of the washer. In this context, flat means without any protrusions or webs.

All prior art documents mentioned above disclose washers which serve for improving the tightness of a screw hole. None of the documents cited describes increasing the forces which can be transmitted, which is the aim of the present invention.

SUMMARY OF THE INVENTION

Based on this prior art, the object of the present invention is to increase the coefficient of friction without requiring an additional member which has to be inserted during assembly.

According to the invention, this object is achieved in that the end face of a washer, screw or nut facing the respective workpiece is provided, in accordance with the invention, with a special profile. In this context, studs or ribs as a profile have not achieved the desired result. To achieve the stated object, the present invention therefore selects for the first time an end face which is provided with a concentric, annularly encircling web as a profile and a region of the end face outside the encircling web which tapers conically towards the web from the outside, the inclination from the outside to the inside being directed away from the workpiece and the inclination of the conically tapering region to the plane of the workpiece being 1.5 to 2.5°.

By comparison with all of the shapes known in the prior art, this special shape according to the invention can absorb by far the highest transverse forces. A further additional advantage of the present invention is that it can provide a one-hundred percent water-tight connection. This is frequently required, since water, in combination with road salt in winter for example, can lead to severe corrosion between the material of the washer, nut or screw (steel) and the material of the workpiece (nowadays usually aluminium) because of the electrochemical series. This is therefore a particular advantage of the present invention when used with pairs of materials having different electrochemical potentials.

The profile according to the invention for the end face of washers, screws or nuts increases the theoretical coefficient of friction resulting from a positive fit so much that extremely high transverse forces can be transmitted. It is virtually possible to achieve a theoretical coefficient of friction of 1. In the prior art, coefficients of friction of 0.1 to 0.3 are usually achieved, depending on the surface. In this context, the absolutely water-tight connection is a further additional advantage of the invention.

Because of its circular symmetry, the profile according to the invention may be applied to or pressed onto the end face of a screw, nut or blind rivet nut directly. In addition, it is also possible according to the invention to apply the profile according to the invention to a washer, and subsequently to use this washer with a normal screw, nut or blind rivet nut or to connect the corresponding washer to the respective connecting member directly by rolling, welding or adhesion.

The concentric, annularly encircling web according to the invention on the end face penetrates into the base material of the workpiece, where it transmits the large transverse forces via a positive fit.

In this context, it is particularly preferred for the region of the end face inside the encircling web to be arranged deeper relative to the workpiece than the outer region and than the theoretical zero point of the contact surface between the end face and the workpiece. In this way, it can be ensured that the web always penetrates first and completely into the base material of the workpiece (usually aluminium or another light metal). This ensures the positive fit, the water-tightness and the high transverse force transmission capacity.

BRIEF DESCRIPTION OF THE DRAWINGS

The present invention is explained in greater detail in the following by way of the embodiment shown in the drawings, in which:

FIG. **1** is a section taken in the radial direction through a washer according to the invention;

FIG. **2** is the detail X from FIG. **1**; and

FIG. **3** is a view of the washer from FIG. **1**, looking onto the end face on the work-piece side.

PREFERRED EMBODIMENT OF THE INVENTION

FIG. **1** is a sectional view of a washer **10** according to the invention, the section being taken along the axis of rotation. This washer **10** comprises an end face **12** which faces a workpiece when the washer **10** is mounted. As can be seen more clearly in FIGS. **2** and **3**, a concentrically encircling web **14** is attached to this end face **12**.

As can be seen particularly clearly in FIG. **2**, the region **16** of the end face **12** inside the encircling web **14** is arranged deeper relative to the workpiece, preferably by 0.2 to 0.4 mm.

As can also be seen most clearly from the detailed view of FIG. **2**, the region **18** of the end face **12** outside the encircling web **14** is inclined at an inclination of 1.5 to 2.5° to the plane of the workpiece, (indicated by angle A in FIG. **2**), in such a way that the distance between the workpiece and the surface of the washer **10** increases from the outside towards the web **14**.

As can also be seen in the detailed view of FIG. **2**, the web **14** has a cross-section in the form of a rounded V, the rounded point **20** of which points towards the workpiece. The flanks **22**, **24** of the web **14** approach one another at an angle of 80 to 90° (indicated by angle B in FIG. **2**).

The present invention has been explained here by way of a washer. In the same manner as has been described here for a washer, the present invention may of course also be carried out on a corresponding end face of a nut or blind rivet nut or on the underside of the head of a screw, in that the corresponding end faces facing the workpiece in each case are configured accordingly.

The washer according to the invention can either be used loose or be rolled, welded or adhesively bonded onto a corresponding connecting member.

Naturally, the profile according to the invention of the end face can be manufactured particularly cost-effectively if the corresponding profile is applied to the corresponding end face of the nut, blind rivet nut or screw straight away, during manufacture.

The invention claimed is:

1. Washer, screw or nut having an end face directly contacting a workpiece, wherein the end face is provided with a concentric, annularly encircling web, and a region of the end face outside the encircling web tapers conically towards the web from the outside, the inclination from the outside to the inside being directed away from the workpiece, wherein the inclination of the conically tapering region to the plane of the workpiece is 1.5 to 2.5°, wherein the web has a cross-section in the form of a rounded V, the rounded point of which points towards, and is configured to penetrate, the workpiece.

2. Washer, screw or nut according to claim **1**, wherein a region of the end face inside the encircling web is arranged deeper relative to the workpiece.

3. Washer, screw or nut according to claim **1**, wherein flanks of the web together form an angle of 80 to 90°.

4. Washer, screw or nut according to claim **2**, wherein the region of the end face inside the web is arranged 0.2 to 0.4 mm deeper than the web.

* * * * *