Sept. 29, 1959 A. BARKER 2,906,058

GREETING CARD OR FOLDER

Filed Feb. 20, 1958

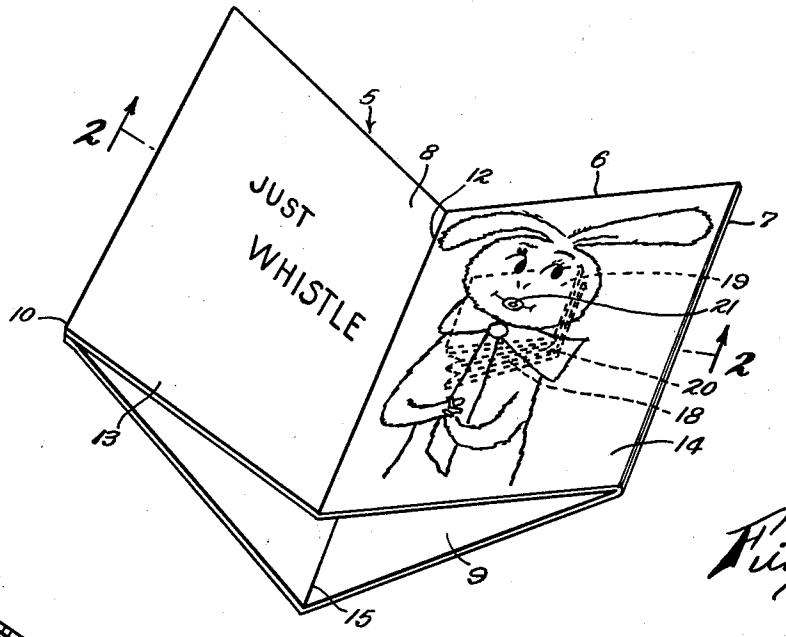


Fig. 1

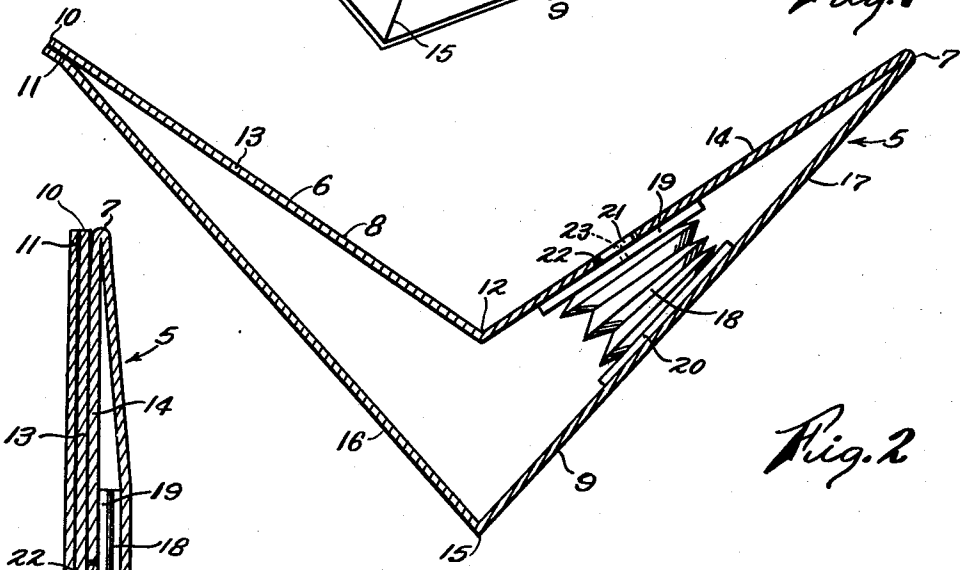


Fig. 2

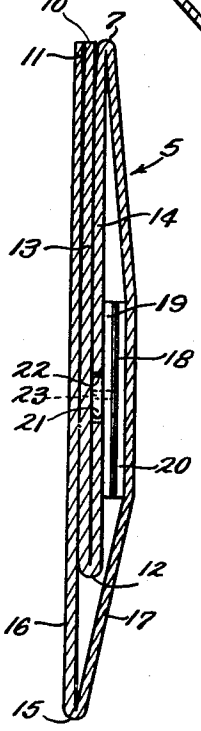


Fig. 3

INVENTOR.
Alvin Barker
BY
Murray, Sackhoff & Murray
ATT'YS

United States Patent Office 2,906,058 Patented Sept. 29, 1959



2,906,058

# GREETING CARD OR FOLDER

Alvin Barker, Cincinnati, Ohio

Application February 20, 1958, Serial No. 716,384

2 Claims. (Cl. 46—175)

The present invention relates to novelty greeting cards or folders and is particularly directed to a card construction that provides an audible effect when the folded sections of the card are moved relative to each other, as when the card is opened or closed.

It is an object of the invention to provide in the usual folded greeting card a simplified yet concealed sound producing means that is made operative by relative movement of the folded card sections and which is so placed that it does not at all interfere with the opening or closing movements of the movable sections of the card nor does it lessen the amount of space usually occupied by illustrations on the exposed faces of said sections.

Another object of the invention is to provide a sound maker having the foregoing characteristics that can be worked into various illustrated patterns appearing on the surfaces of the folded card sections.

The foregoing and further objects and novel features of the invention will become apparent from the following detailed description when read in connection with the accompanying drawings whereby certain advantages are obtained and the card rendered simpler, less expensive to manufacture and more attractive in its appearance and action.

In the drawings wherein like reference characters refer to like parts throughout the several views:

Fig. 1 is a perspective view of my greeting card or folder illustrated in open position.

Fig. 2 is an enlarged section taken on line 2—2 of Fig. 1.

Fig. 3 is a section similar to Fig. 1 showing the card or folder in closed position.

The embodiment of my invention comprises a greeting card or folder 5 constructed from a rectangular piece of light cardboard 6, which is folded along a lateral crease line 7 that is located to one side of the longitudinal center of the cardboard sheet to provide a somewhat foreshortened inner section 8 and a relatively longer outer section 9. The ends of the sections 8 and 9 are secured together along a lateral end of the greeting card that is opposed to the crease line 7 by means of a glue line 11, or the like.

The inner section 8 has a centrally located, laterally extending crease line 12 formed therein which divides it into two panels 13 and 14 that are foldable on each other around said line, whilst the outer section 9 is given a crease line 15 which extends laterally across the center of the section and divides said outer section into panels 16 and 17 that are folded onto the adjacent panels 13 and 14, respectively, of the inner section when the greeting card is in closed position.

With particular reference to Figs. 2 and 3 which, respectively, show my greeting card in open and closed positions, it will be noted that in folded, closed position the crease lines 12 and 15 of the inner and the outer sections 8 and 9, respectively, are spaced away from each other and that the panels of the inner section have shorter longitudinal dimensions than the panels of the



outer section. When the card is opened from the position shown in Fig. 3 to that shown in Fig. 2 the construction of the card will provide relative hinging movement between the adjacent panels of the sections in a direction away from each other whereas when the card is closed from the position indicated in Fig. 2 to the position shown in Fig. 3, the adjacent panels move toward each other in a direction opposed to that of the panels when the card is opened. Thus opening and closing of the card in a normal manner will provide relative reciprocating movement between the adjacent panels of the inner and outer sections of the card.

The sound producing device for my greeting card or folder is shown in the drawings as a bellows 18 made of inexpensive, light weight paper or the like, which is secured to reciprocated, opposed end pieces 19 and 20 that may be constructed of cardboard, or other relatively stiff material. As best shown in Figs. 2 and 3 the bellows is positioned between adjacent panels 14 and 17 of the inner and outer sections, respectively, the end piece 19 being glued or otherwise fastened to the interior face of the panel 14 while end piece 20 of the bellows is glued to the interior face of the panel 17. A sound producing device such as a whistle 21, or the like, is mounted in a hole 22 formed in the panel 14 and is secured on the end piece 19 in such manner that the air orifice 23 of the whistle is in communication with the interior of the expansible air chamber formed by the bellows and the reciprocated end pieces 19 and 20 therefor.

When the greeting card or folder is opened and closed relative reciprocating movement is set up between the adjacent panels of the inner and outer sections of the card which moves the bellows end pieces 19 and 20 toward and away from each other thereby drawing in and expelling air through the orifice 23 in the sound producing device 21 to cause an auditory effect simultaneous with the opening and closing of said card. It will be noted with reference to Fig. 1 that this sound producing device is completely concealed from view and permits illustration on all the exposed faces of the card panels whilst permitting the card to be folded flat (Fig. 3) for mailing, or the like. The sound producing device may also be made a part of various illustrated patterns on the card, as for instance, in the card shown in the drawings the sound producing device forms the mouth of an illustrated figure which gives the impression that such figure is actually whistling as the card is opened or closed.

From the foregoing explanation it will be seen that the invention lends itself to various cards, folders, and books and that various changes may be made in the design and arrangement of parts or in the materials of construction without departing from the spirit and scope of the invention as it is expressed in the appended claims.

What is claimed is:

1. A novelty greeting card comprising an inner section having a centrally located, laterally extending crease line providing two panels foldable on each other around said line, an outer section overlying the inner section and longitudinally elongated with respect to the corresponding dimension of the inner section, said outer section having a centrally located, laterally extending crease line providing two panels foldable on adjacent panels of the inner section, means for connecting together the free end portions of adjacent panels of the sections whereby folding movement of the card will cause relative pivotal movement between adjacent card panels, a bellows positioned between adjacent panels of the sections and having its reciprocated end pieces each connected to one of said panels, and a restricted orifice connected with the bellows for producing a sound when the bellows end pieces are

reciprocated by opening and closing movement of the card.

2. A novelty greeting card comprising an inner section having a centrally located, laterally extending crease line providing two panels foldable on each other around said line, an outer section overlying the inner section and longitudinally elongated with respect to the corresponding dimension of the inner section, said outer section having a centrally located, laterally extending crease line providing two panels foldable on adjacent panels of the inner section, means for connecting together the free end portions of adjacent panels of the sections whereby folding movement of the card will cause relative pivotal movement between adjacent card panels, a bellows positioned between adjacent panels of the sections and having its reciprocated end pieces each connected to one of said panels, and a restricted orifice formed through the panel of the inner section and through the bellows end piece and in open communication with the interior of the bellows.



**References Cited** in the file of this patent

UNITED STATES PATENTS

| | | |
|---|---|---|
| 2,219,013 | Krasno | Oct. 22, 1940 |

FOREIGN PATENTS

| | | |
|---|---|---|
| 4,774 | Great Britain | 1877 |
| 379,486 | Great Britain | Sept. 1, 1932 |
| 714,472 | Great Britain | Aug. 25, 1954 |