Jan. 24, 1928. 1,657,287

A. R. TRIST

PRINTING MACHINE

Filed Oct. 5, 1926 2 Sheets-Sheet 1

Fig. 1.

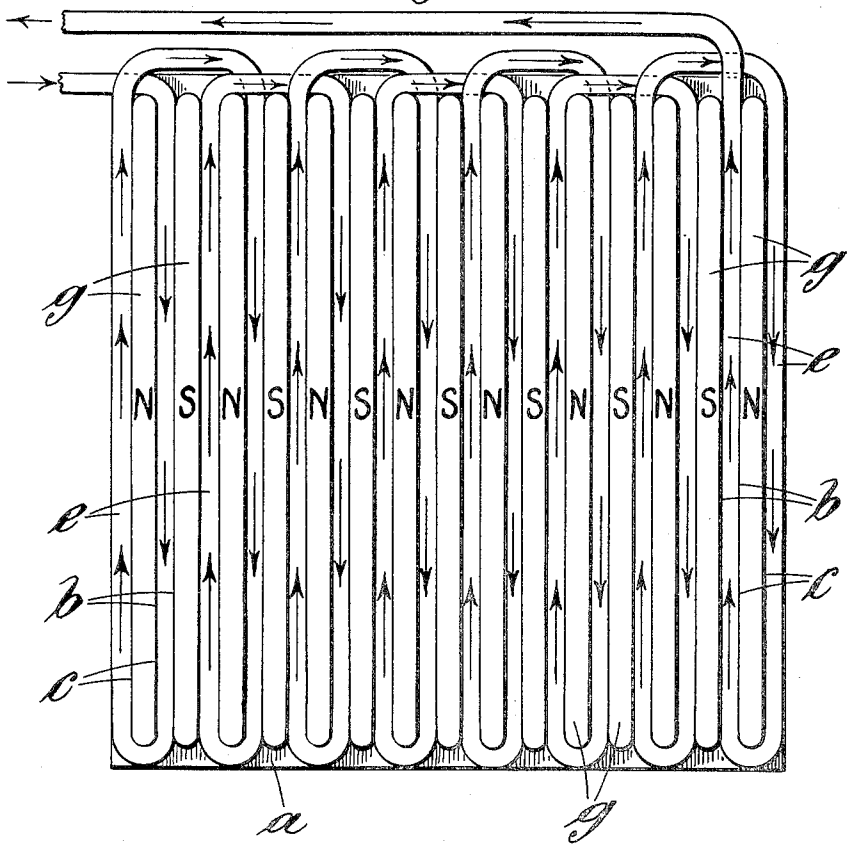

Fig. 4.

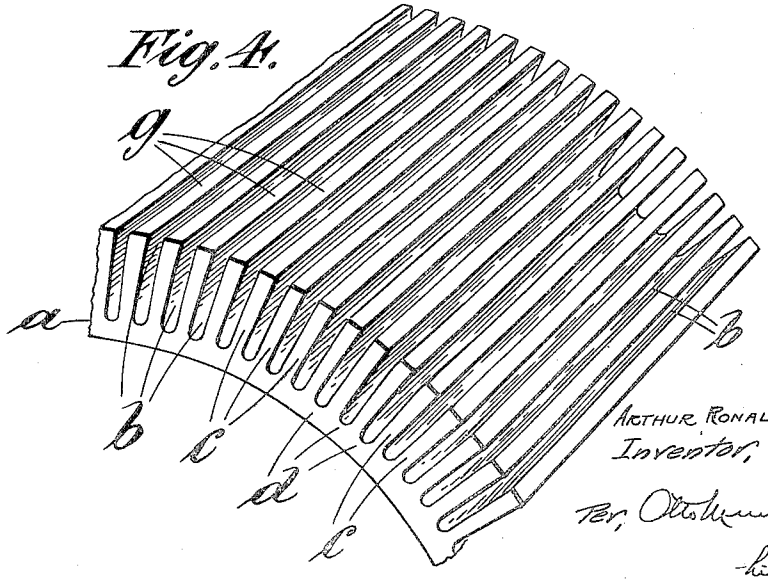

Arthur Ronald Trist.
Inventor,
Per, Otto Schmidt
his Attys.

Jan. 24, 1928.

1,657,287

A. R. TRIST

PRINTING MACHINE

Filed Oct. 5, 1926

2 Sheets-Sheet 2

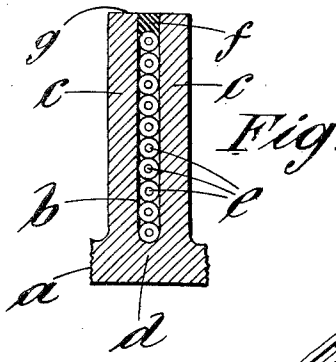

Fig. 3.

Fig. 2.

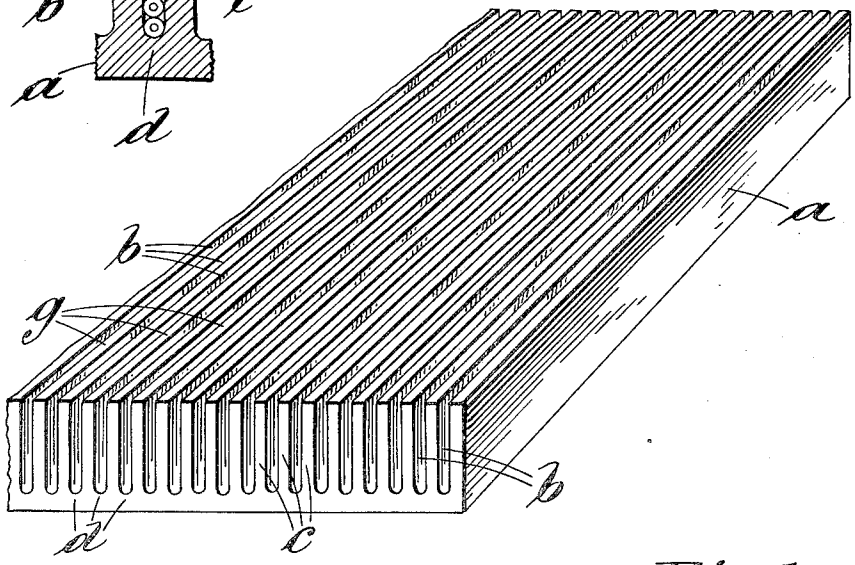

Fig. 5.

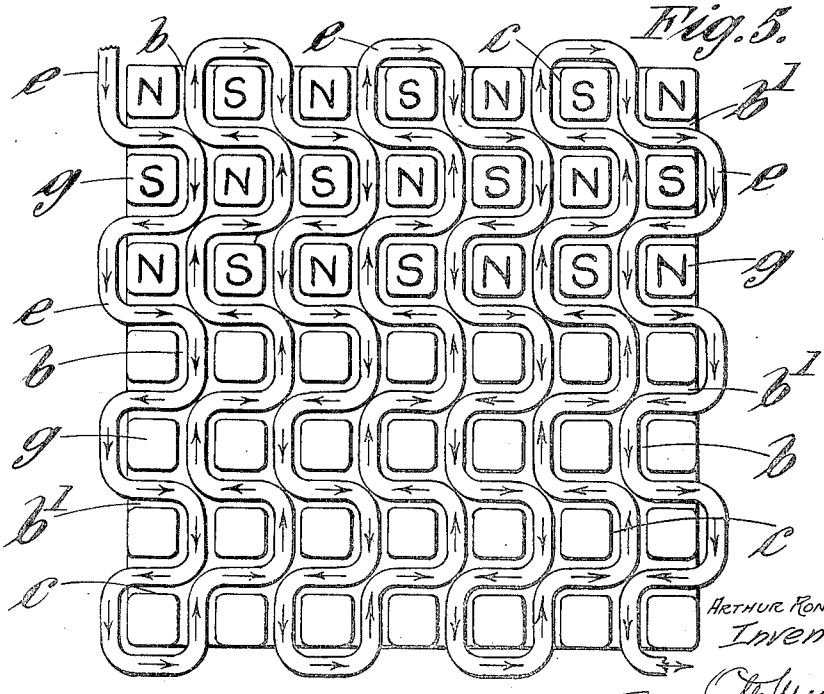

ARTHUR RONALD TRIST
Inventor,
Per Otto Munk
his Atty.

Patented Jan. 24, 1928. 1,657,287

UNITED STATES PATENT OFFICE.

ARTHUR RONALD TRIST, OF LONDON, ENGLAND.

PRINTING MACHINE.

Application filed October 5, 1926, Serial No. 139,652, and in Great Britain November 11, 1925.

This invention relates to improvements in printing machines in which an impression is taken from a prepared flat or cylindrical surface and has for one of its objects the provision of means and arrangement of parts whereby the prepared surface can be held in intimate contact with the bed or cylinder of the machine throughout substantially the whole of its area in a simple and effective manner.

A further object of this invention is to enable a great saving of time to be effected during the preparatory operation and to enable such operation as is required to be successfully carried out by comparatively unskilled labour.

It is also an object of this invention to enable that class of printing which requires a continuous or uninterrupted printing operation to be carried out with curved printing plates which were initially flat.

If the invention is to be used in a simple printing process it is sufficient if the printing surface is supported by magnetic material such as iron to which it is intimately attached, for example, by electrode position so as to form a sheet of uniform thickness, alternatively the material of which the printing surface is formed may be of magnetic material but in all cases the finished printing plate must have uniform thickness and be uniformly flat or regularly curved in part or whole to fit the cylinder of the printing machine.

The printing machine bed or cylinder is provided with a plurality of magnetic devices, the polar extremities of which form a substantially continuous surface which is so located that when a printing plate of uniform thickness is disposed thereon an even impression is obtained on the material being impressed during printing operation.

The printing plates employed in this invention may be as thin as desired inasmuch as the number of magnetic poles may be multiplied indefinitely up to a limit defined by mechanical and constructional details. It will be seen that the magnetic holding powers of the device is limited by the magnetic saturation of the section of the plate, therefore as the section of the plate is reduced in thickness the number of poles must be increased, and in order to reduce the losses as much as possible care must be taken to avoid air spaces between the windings and the limbs as much as possible.

In the drawings:—

Figure 1 is a diagrammatic plan view of an electromagnetic device constructed in accordance with this invention:

Figure 2 is a perspective view of the iron element of the magnetic device illustrated in Figure 1:

Figure 3 is a cross section through two poles and a winding space:

Figure 4 is a fragmentary perspective view of an iron element for a magnetic device for use on the cylinder of a rotary printing machine; and

Figure 5 is a diagrammatic plan view of a modified form of electromagnetic device constructed in accordance with this invention.

Referring to Figures 1, 2 and 3 of the drawings, a form of electromagnetic device for use on a flat bed printing machine may comprise a block of suitable iron *a* having a plurality of grooves *b* formed therein by planing, sawing, milling or other metal removing process.

The formation of the grooves *b* produces a plurality of ribs *c* connected together at their lower ends by webs *d* thus producing a plurality of U shaped magnet elements each comprising two adjacent ribs *c* acting as limbs and a web *d* which acts as a yoke.

In this arrangement each alternate rib *c* is provided with a winding *e* energized to induce a magnetic pole of similar polarity in each case with the result that a magnetic device is obtained having a plurality of magnetic fields incidental to a plurality of polar faces *g* each of comparatively small area.

As illustrated in Fig. 1 the windings *e* are all connected in series circuit with one another and the source of electric supply but obviously such windings *e* can be equally well connected in parallel circuit or in series parallel circuit without departing from this invention.

To enable a smooth continuous surface to be available for contact with the plate to be held the upper convolution of each of the windings *e* is located somewhat below the external ends of the ribs c and the space thus left is filled up with a suitable composition or fusible metal *f* of comparatively low melting point.

When such a magnetic device is to be used in conjunction with a rotary printing machine a similar construction to that already described may be employed provided that in place of a flat block of iron a cylinder or tube

is substituted. Such a construction is illustrated in Fig. 4.

In an alternative construction two series of grooves b and b' at right angles to one another may be used as illustrated in Figure 5, the winding e passing about three sides of each pole g. By arranging the turns of wire in this way it will be seen that although each turn of wire only passes about three sides of a pole g the majority of the poles g have current flowing unidirectionally completely around them owing to adjacent windings, in such direction that each pole g is surrounded by four poles g of opposite polarity.

This arrangement enables the number of poles to be largely increased with consequent reduction in the area of each pole.

For purposes of general explanation it has been assumed that an iron block is used but obviously for ease of manufacture and winding the device can be built up from elemental parts or from laminations as may be found to be most convenient and in some cases the windings may be associated with the polar parts before such parts are assembled with the remainder.

It will be readily seen, if the printing plate is of uniform thickness and if the ends of the polar extremities form or complete a smooth regular surface which is parallel with the impression surface during operation that no "make ready" or "underlay" will be required and as, in view of the electromagnetic holding means, no mechanical means for holding the plate in position are required, all that is necessary during the preparing operation is to place the printing plate or plates in the precise location required, switch on the electric current and proceed with printing; the precision with which the plates can be located being of considerable value in cases where multicolour or repeated impressions are necessary.

Further as no mechancal means for holding the plate in position on the cylinder are required, it is possible to employ a curved printing plate or printing plates, the edges of which abut so as to produce a continuous printed pattern and in some cases it may be desirable to connect the abutting edges together so as to avoid the possibility of any indication of the edges in the printed result.

Owing to the plurality of electromagnetic holding devices and the attraction thereof any very small irregularities of the printing plate will be corrected and owing to the uniform attraction over the surface large printing plates can be employed without fear of their buckling or "knocking" during use, even when such plates are only fifteen one thousandths of an inch in thickness.

It will also be recognized that the expensive electrodeposited copper cylinders used in machines for photogravure printing processes may be effectively replaced according to my invention thus enabling said process to be effected more cheaply.

In cases where it is not possible to obtain sheets of magnetizable material sufficiently thin or sufficiently uniform for the purposes of this invention obviously an electromagnetic device of the form and character recited above may be employed to hold sheets of magnetizable material during grinding, machining polishing or analogous process.

I claim:—

1. An improved magnetic bed for printing machines having in combination a bed plate of magnetizable material, a plurality of grooves in said bed plate and an insulated electrical conductor disposed in said grooves so as to form magnetic poles of opposite polarity adjacent to one another when an electrical current is passed through said conductor.

2. An improved magnetic bed for printing machines having in combination a bed plate of magnetizable material, a plurality of parallel grooves in said bed plate and an insulated electrical conductor disposed in said grooves so as to form magnetic poles of opposite polarity adjacent to one another when an electrical current is passed through said conductor.

3. An improved magnetic bed for printing machines having in combination a bed plate of magnetizable material, two series of intersecting grooves in said bed plate and an insulated electrical conductor disposed in said grooves so as to form magnetic poles of opposite polarity adjacent to one another when an electrical current is passed through said conductor.

4. An improved magnetic bed for printing machines having in combination a bed plate of magnetizable material, two intersecting series of parallel grooves in said bed plate and an insulated electrical conductor disposed in said grooves so as to form magnetic poles of opposite polarity adjacent to one another when an electrical current is passed through said conductor.

5. An improved magnetic bed for printing machines having in combination a mass of magnetizable material, two intersecting series of parallel grooves in said magnetizable material and having the upper edges of the projections therebetween located in a plane surface and an insulated electrical conductor disposed about said projections so as to form magnetic poles of opposite polarity adjacent to one another when an electrical current is passed through said conductor.

6. An improved magnetic bed for printing machines having in combination a mass of magnetizable material, two intersecting series of parallel grooves in said magnetizable material and having the upper edges of the projections therebetween located in a

cylindrical surface and an insulated electrical conductor disposed about said projections so as to form magnetic poles of opposite polarity adjacent to one another when an electric current is passed through said conductor.

7. An improved magnetic bed for printing machines having in combination a mass of magnetizable material, two intersecting series of parallel grooves in said magnetizable material, an insulated electrical conductor disposed in said grooves so as to form magnetic poles of opposite polarity adjacent to one another when an electrical current is passed through said conductor and fillings in said grooves for forming a substantially continuous supporting surface for a magnetizable sheet.

8. An improved magnetic bed for printing machines having in combination a mass of magnetizable material, two intersecting series of parallel grooves in said magnetizable material and an insulated electrical conductor disposed in said grooves so as to form magnetic poles of opposite polarity adjacent to one another when an electrical current is passed through said conductor the magnetic fields existing between said adjacent poles being of such density as can be effectively employed for holding a thin magnetizable sheet and in such number as will securely hold said sheet in position during printing operation.

9. An improved magnetic bed for printing machines having in combination a mass of magnetizable material, two intersecting series of parallel grooves in said magnetizable material the upper edges of the projections therebetween being located in a plane surface, an insulated electrical conductor disposed in said grooves so as to form magnetic poles of opposite polarity adjacent to one another when an electrical current is passed through said conductor, the magnetic fields existing between said adjacent poles being of such density as can be effectively employed for holding a thin magnetizable sheet and in such number as will securely hold said sheet in position during printing operation and a non-magnetic filling in said grooves for forming a continuous supporting surface for said magnetizable sheet.

10. An improved magnetic bed for printing machines having in combination a mass of magnetizable material, two intersecting series of parallel grooves in said magnetizable material the upper edges of the projections therebetween being located in a cylindrical surface, an insulated electrical conductor disposed in said grooves so as to form magnetic poles of opposite polarity adjacent to one another when an electrical current is passed through said conductor, the magnetic fields existing between said adjacent poles being of such density as can be effectively employed for holding a thin magnetizable sheet and in such number as will securely hold said sheet in position during printing operation, and a non-magnetic filling between said ribs for forming a continous supporting surface for said magnetizable sheet.

11. An improved magnetic bed for printing machines having in combination a mass of magnetizable material having a plane upper surface, a plurality of parallel grooves in said mass and an insulated electrical conductor disposed in said grooves so as to form magnetic poles of opposite polarity adjacent to one another when an electrical current is passed through said conductor.

12. An improved magnetic bed for printing machines having in combination a cylinder of magnetizable material, a plurality of parallel grooves in the exterior of said cylinder and an insulated electrical conductor disposed in said grooves so as to form magnetic poles of opposite polarity adjacent to one another when an electrical current is passed through said conductor.

13. An improved magnetic bed for printing machines having in combination a mass of magnetizable material, a plurality of parallel grooves in said mass, an insulated electrical conductor disposed in said grooves so as to form magnetic poles of opposite polarity adjacent to one another when an electrical current is passed through said conductor and fillings in the upper part of said grooves so as to form with the exposed parts of the mass a substantially continuous supporting surface for a magnetizable sheet.

14. An improved magnetic bed for printing machines having in combination a mass of magnetizable material, a plurality of parallel grooves in said mass and an insulated electrical conductor disposed in said grooves so as to form magnetic poles of opposite polarity adjacent to one another when an electrical current is passed through said conductor the magnetic fields existing between said adjacent poles being of such density as can be effectively employed for holding a thin magnetizable sheet and in such number as will securely hold said sheet in position during printing operation.

15. An improved magnetic bed for printing machines having in combination a mass of magnetizable material having a plane upper surface, a plurality of parallel grooves in said mass, an insulated electrical conductor disposed in said grooves so as to form magnetic poles of opposite polarity adjacent to one another when an electrical current is passed through said conductor, the magnetic fields existing between said adjacent poles being of such density as can be effectively employed for holding a thin magnetizable sheet and in such number as will securely hold said sheet in position during printing operation and a non-magnetic filling in the

upper part of said grooves for forming, with the plane upper surface, a continuous supporting surface for said magnetizable sheet.

16. An improved magnetic bed for printing machines having in combination a mass of magnetizable material having a cylindrical external surface, a plurality of parallel grooves in said mass, an insulated electrical conductor disposed in said grooves so as to form magnetic poles of opposite polarity adjacent to one another when an electrical current is passed through said conductor the magnetic fields existing between said adjacent poles being of such density as can be effectively employed for holding a thin magnetizable sheet and in such number as will securely hold said sheet in position during printing operation, and a non-magnetic filling in the upper part of said grooves for forming, with the cylindrical external surface, a continuous supporting surface for said magnetizable sheet.

17. An improved magnetic bed for printing machines having in combination a plurality of strips of magnetizable material having their edges located in plane surfaces, a plurality of strips of magnetizable material of less width than the first named strips and interposed between said first named strips so as to form grooves, clamping means for securing all said strips in magnetic association with one another, an insulated electrical conductor disposed in said grooves so as to form magnetic poles of opposite polarity adjacent to one another when an electrical current is passed through said conductor and a filling of non-magnetizable material in the upper part of said grooves to form a continuous supporting surface with the exposed edges of the strips.

18. An improved magnetic bed for printing machines having in combination a plurality of strips of magnetizable material having their edges located in cylindrical surfaces, a plurality of strips of magnetizable material of less width than the first named strips and interposed between said first named strips so as to form grooves, clamping means for securing all said strips in magnetic association with one another, an insulated electrical conductor disposed in said grooves so as to form magnetic poles of opposite polarity adjacent to one another when an electrical current is passed through said conductor and a filling of non-magnetizable material in the upper part of said grooves to form a continuous supporting surface with the exposed edges of the strips.

19. An improved magnetic bed for printing machines having in combination a plurality of strips of magnetizable material having their edges located in plane surfaces, a plurality of strips of magnetizable material of less width than the first named strips and interposed between said first named strips so as to form grooves, notches in one edge of said first named strips, clamping means for securing all said strips in magnetic association with one another to form a magnetizable mass having two intersecting series of parallel grooves, an insulated electrical conductor disposed in said grooves so as to form magnetic poles of opposite polarity adjacent to one another when an electrical current is passed through said conductor and a filling of non-magnetizable material in the upper part of said grooves to form a continuous supporting surface with the exposed parts of the strips.

20. An improved magnetic bed for printing machines having in combination a plurality of strips of magnetizable material having their edges located in cylindrical surfaces, a plurality of strips of magnetizable material of less width than the first named strips and interposed between said first named strips so as to form grooves, notches in one edge of said first named strips, clamping means for securing all said strips in magnetic association with one another to form a magnetizable mass having two intersecting series of parallel grooves, an insulated electrical conductor disposed in said grooves so as to form magnetic poles of opposite polarity adjacent to one another when an electrical current is passed through said conductor and a filling of non-magnetizable material in the upper part of said grooves to form a continuous cylindrical supporting surface with the exposed parts of said strips.

ARTHUR RONALD TRIST.