A. B. KENDALL.

LOCKING DEVICE FOR RELAY ARMATURES.

APPLICATION FILED OCT. 28, 1920.

1,433,952. Patented Oct. 31, 1922.

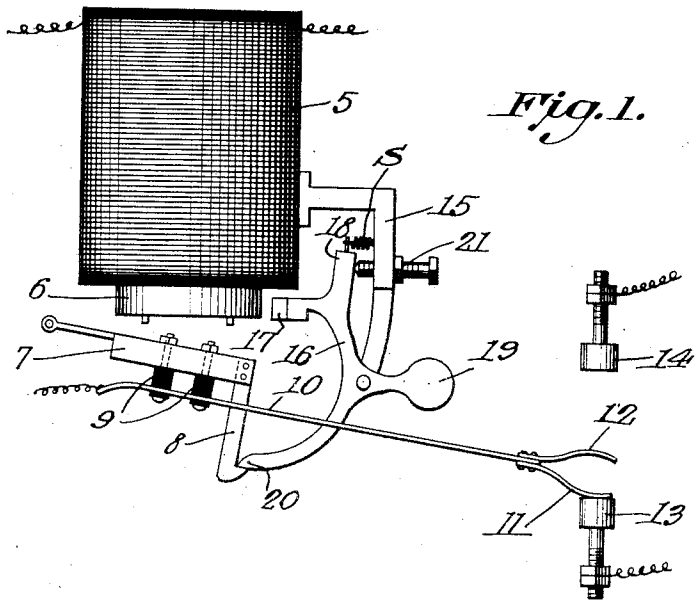

Fig. 1.

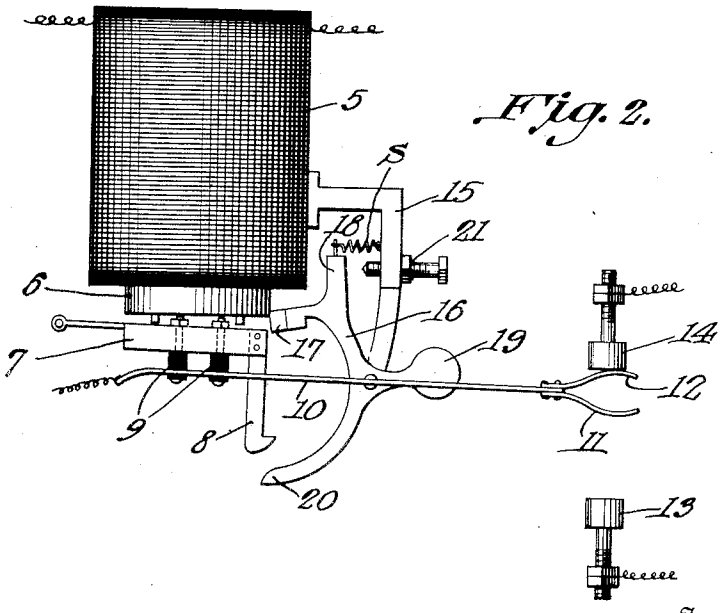

Fig. 2.

Inventor

A. B. Kendall

Davis Belton Moore.

Attorney

Patented Oct. 31, 1922.

1,433,952

UNITED STATES PATENT OFFICE.

ALLEN B. KENDALL, OF MAYWOOD, ILLINOIS, ASSIGNOR TO REGAN SAFETY DEVICES COMPANY, INC., A CORPORATION OF NEW YORK.

LOCKING DEVICE FOR RELAY ARMATURES.

Application filed October 28, 1920. Serial No. 420,238.

To all whom it may concern:

Be it known that I, ALLEN B. KENDALL, a citizen of the United States, residing at Maywood, in the county of Cook and State of Illinois, have invented certain new and useful Improvements in Locking Devices for Relay Armatures, of which the following is a specification, reference being had therein to the accompanying drawing.

This invention relates to improvements in locking devices for relay armatures, one object of the invention being the provision of a novel arrangement of lock, a portion of which constitutes an armature and is provided with a counter weight, while the remaining portion is attached to the armature of the relay.

In the accompanying drawings:

Figure 1 is a side elevation of the complete relay, parts being shown unattached with the armature in repelled and locked position.

Figure 2 is a similar view of the armature released and in attracted position.

Referring to the drawings, the numeral 5 designates the electromagnet which is provided with the core 6 disposed in attractive relation to the pivoted armature 7, which is here shown as carrying a depending hook 8 and the two insulated supports 9 for the terminal carrying member 10 which is here shown with two terminals or forks 11 and 12 for cooperation with the contacts 13 and 14, respectively. Pivoted to one side and in any convenient manner, here shown as connected to the supporting bracket 15, is the pivoted locking member 16 having the armature 17, the stop engaging terminal 18, the counter weight 19 and the locking terminal 20. The adjustable stop 21 mounted in the bracket 15 is so disposed as to limit the swinging movement by engagement with the stop 18 and the armature 17 is so disposed as to be in attractive relation to the core 6 of the magnet.

When the parts are in the position as shown in Figure 2, the magnet 5 being energized, the armature 17 having previously been in the position as shown in Figure 1, the armature 17 is attracted toward the core 6 and consequently releases the locking terminal 20 so that the armature 7 is free for engagement toward the core, the de-energization of the magnet 5 permitting the parts to assume the position as shown in Figure 1.

A spring S may also be used in conjunction with the weight or without the weight.

Where desired to use the present device upon moving vehicles the weight would be dispensed with and the spring used for maintaining a neutral or de-energized position and for that reason the spring S is here shown.

What I claim as new is:

1. A relay including a magnet, an armature pivotally associated therewith and in attractive relation thereto a locking member carried thereby and a pivotally controlled armature locking member disposed in cooperative relation with the magnet and having a terminal in cooperative relation to the locking member, whereby the armature when in released position is held fixedly by the locking device.

2. A relay including a magnet, a swinging armature, a locking member carried thereby, a pivotally mounted substantially U-shaped member one terminal of which is an armature disposed in cooperative relation to the magnet, and the other terminal being disposed for cooperation with the locking member, means for limiting the movement of the upward U-shaped member, and a counter weight carried by the U-shaped member.

In testimony whereof I affix my signature.

ALLEN B. KENDALL.