US00D433670S

United States Patent [19]

Lohrding et al.

[11] **Patent Number: Des. 433,670**

[45] **Date of Patent: ** Nov. 14, 2000**

[54] **PORTABLE RADIO COMMUNICATION DEVICE**

[75] Inventors: **Bradley K. Lohrding**, Gurnee; **Galina Treyer**, Northbrook; **Theodore R. Arneson**, Ivanhoe, all of Ill.

[73] Assignee: **Motorola, Inc.**, Schaumburg, Ill.

[**] Term: **14 Years**

[21] Appl. No.: **29/112,104**

[22] Filed: **Oct. 8, 1999**

[51] **LOC (7) Cl.** **14-03**

[52] **U.S. Cl.** **D14/138**

[58] **Field of Search** D14/137, 138, D14/147–148, 247–248, 250, 240, 140–142; 379/433, 434, 419, 420, 428, 440; 455/550–575, 90

[56] **References Cited**

U.S. PATENT DOCUMENTS

D. 307,272	4/1990	Desbarats	D14/148
D. 332,833	1/1993	Lauks et al.	D24/186
D. 340,452	10/1993	Skowronski	D14/148
D. 353,809	12/1994	Nuovo et al.	D14/138
D. 365,095	12/1995	Kajita	D14/138
D. 371,359	7/1996	Hung	D14/147
D. 388,784	1/1998	Phillips et al.	D14/138
D. 394,433	5/1998	Lindeman et al.	D14/138
D. 396,230	7/1998	Phillips et al.	D14/138
D. 398,926	9/1998	Lindeman et al.	D14/138
D. 409,998	5/1999	Meyer	D14/138
D. 411,843	7/1999	Lohrding et al. .	
D. 413,884	9/1999	Ogawa	D14/138
D. 415,149	10/1999	Vuolteenaho et al.	D14/138
D. 415,489	10/1999	Ke	D14/138
D. 421,005	2/2000	Lucaci et al.	D14/138
D. 421,435	3/2000	Haase et al.	D14/137
5,029,236	7/1991	Yasuda et al.	D14/14
5,768,370	6/1998	Maatta et al.	379/433
5,848,152	12/1998	Slipy et al.	379/433
5,909,490	6/1999	Sokolich et al.	379/433
6,006,074	12/1999	De Larminat et al.	455/90

Primary Examiner—Jeffrey Asch

Attorney, Agent, or Firm—Lalita P. Williams

[57] **CLAIM**

The ornamental design for a portable radio communication device, as shown and described.

DESCRIPTION

FIG. **1** is a bottom, right and front perspective view of the portable radio communication device;

FIG. **2** is a left side elevational view of the portable radio communication device shown in FIG. **1**;

FIG. **3** is a front elevational view of the portable radio communication device shown in FIG. **1**;

FIG. **4** is a bottom elevational view of the portable radio communication device shown in FIG. **1**;

FIG. **5** is a top elevational view of the portable radio communication device shown in FIG. **1**;

FIG. **6** is a right side elevational view of the portable radio communication device shown in FIG. **1**;

FIG. **7** is a rear elevational view of the portable radio communication device shown in FIG. **1**;

FIG. **8** is a top, right and front perspective view of the portable radio communication device shown in FIG. **1** without the broken line showings;

FIG. **9** is a left side elevational view of the portable radio communication device shown in FIG. **1** without the broken line showings;

FIG. **10** is a top elevational view of the portable radio communication device shown in FIG. **1** without the broken line showings; and,

FIG. **11** is a rear elevational view of the portable radio communication device shown in FIG. **1** without the broken line showings.

The broken line showings in FIGS. **1–7** are for illustrative purposes only and form no part of the claimed design.

1 Claim, 5 Drawing Sheets

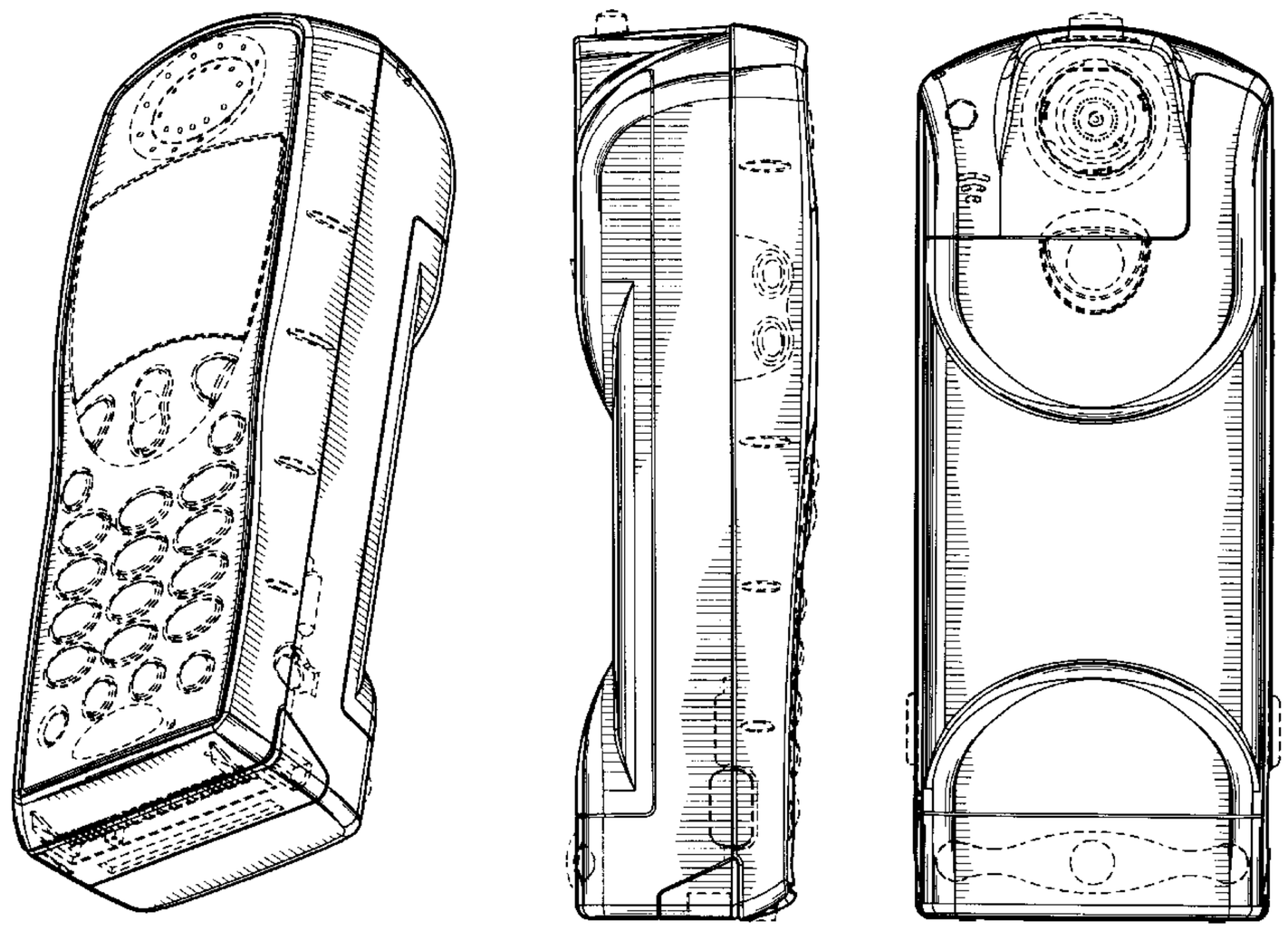

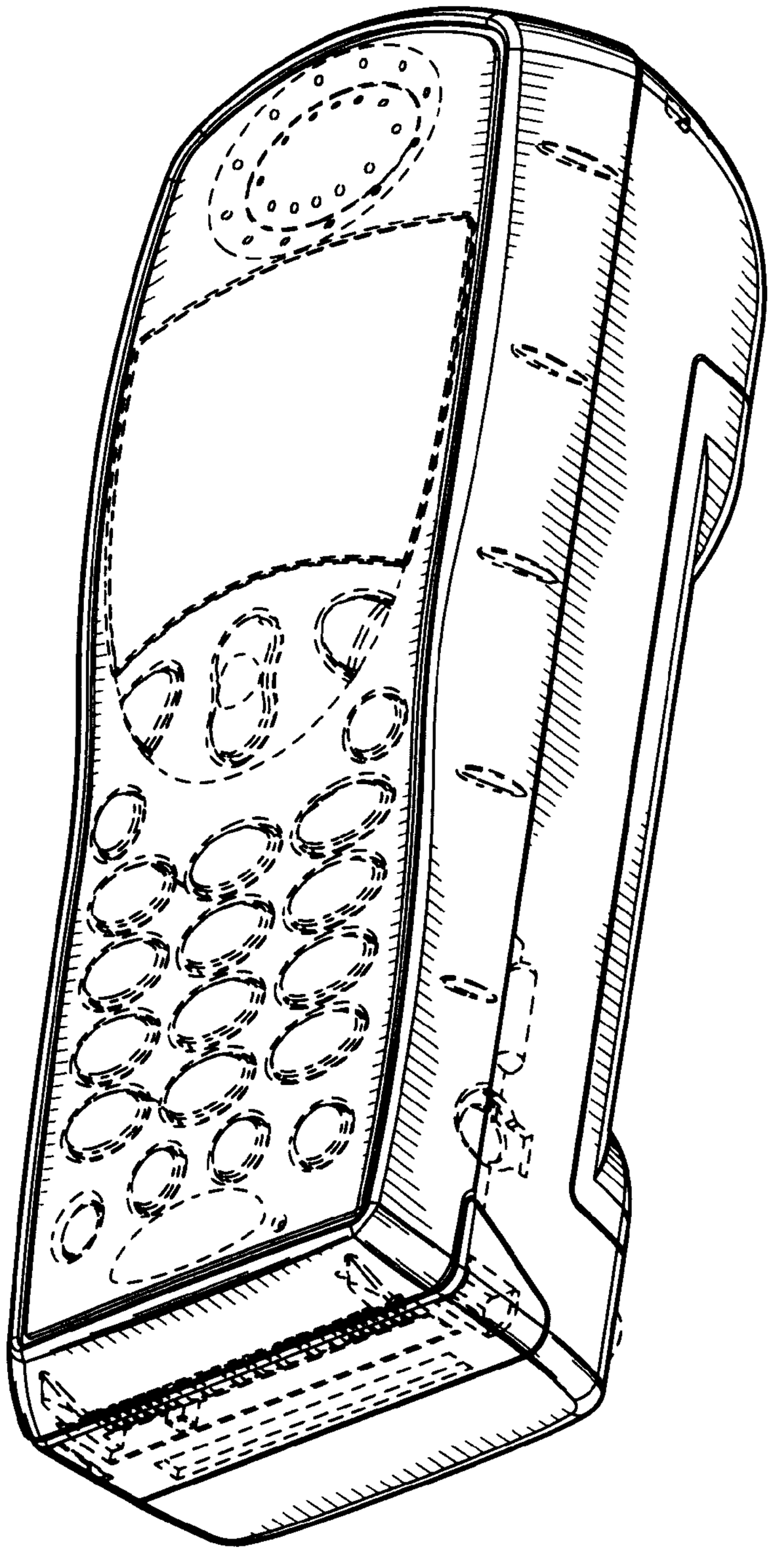

FIG.1

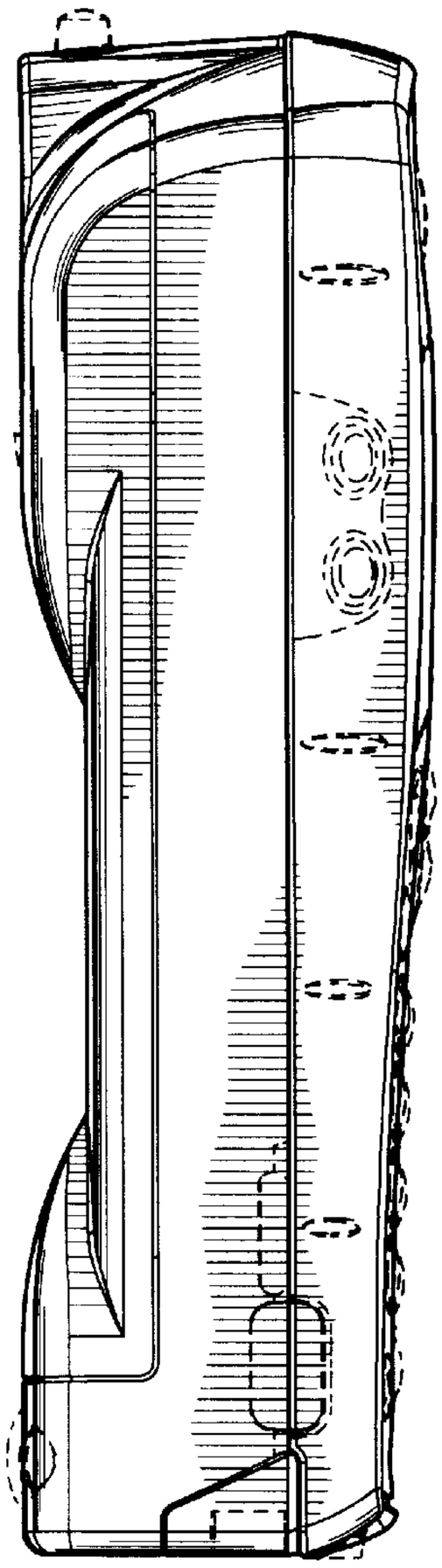

FIG.2

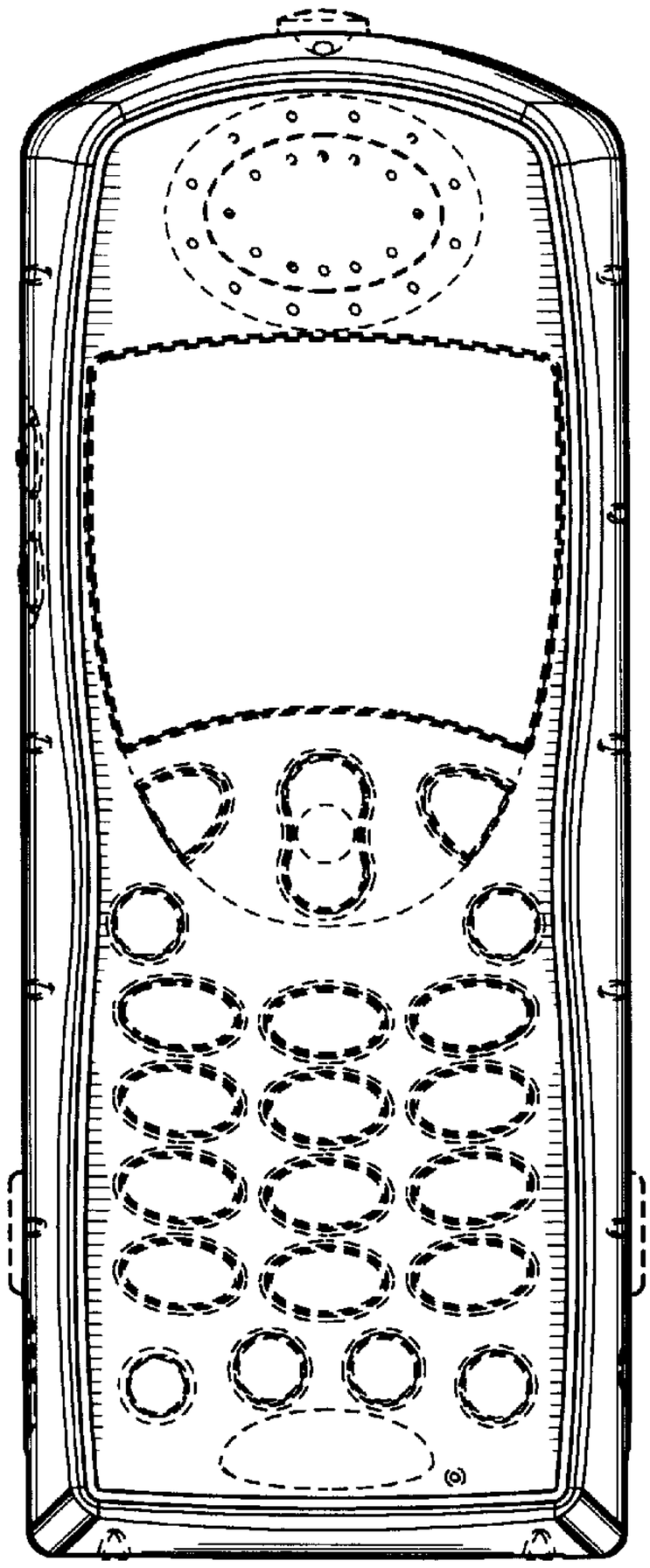

FIG.3

FIG.4

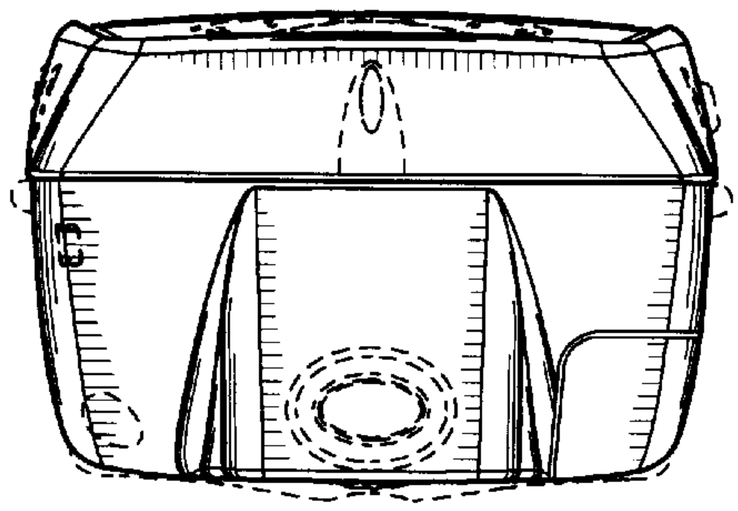

FIG.5

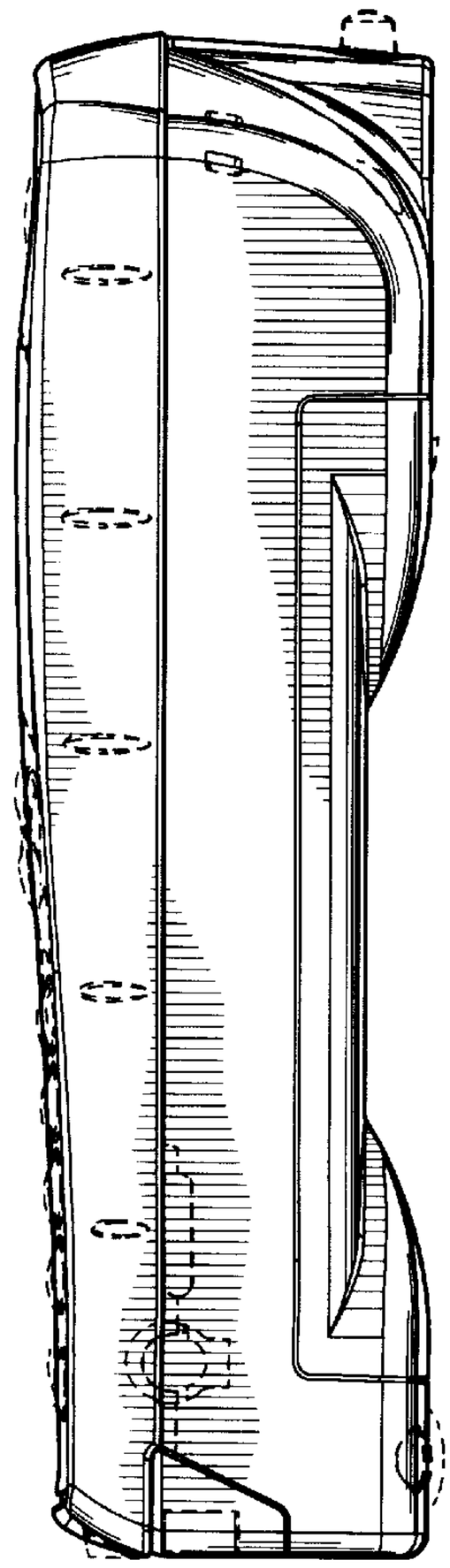

FIG.6

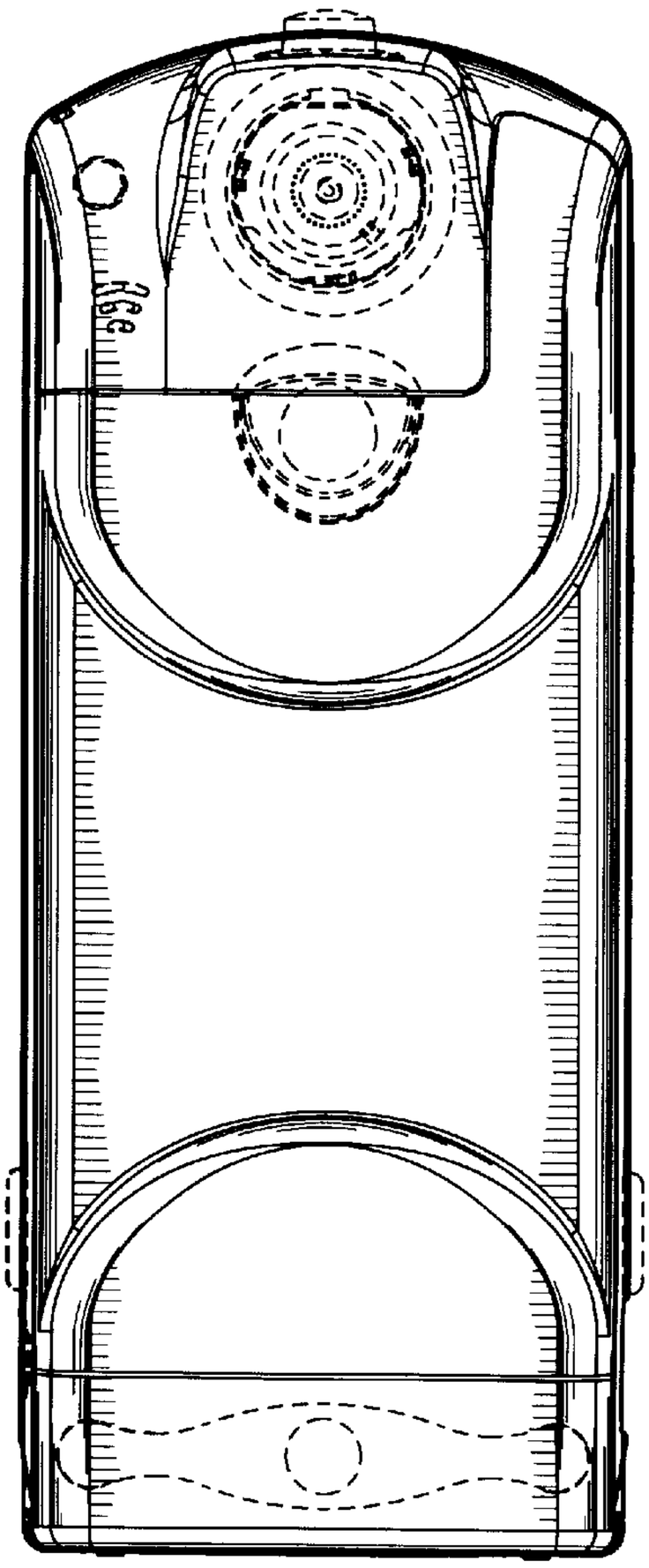

FIG.7



FIG.8

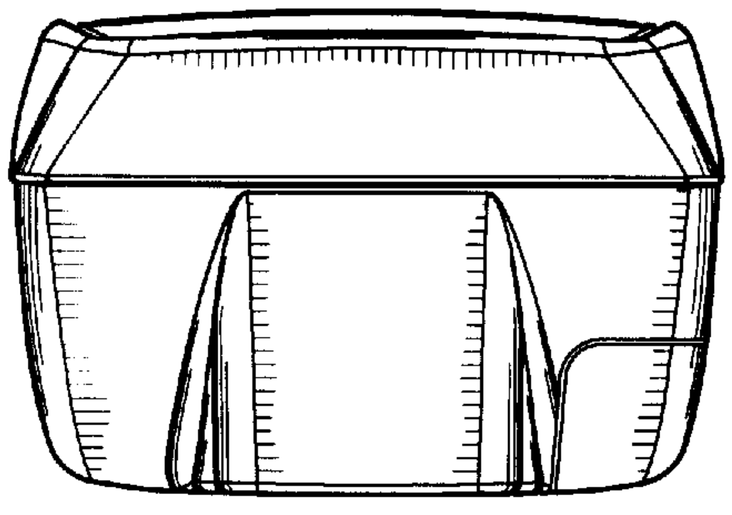

FIG.10

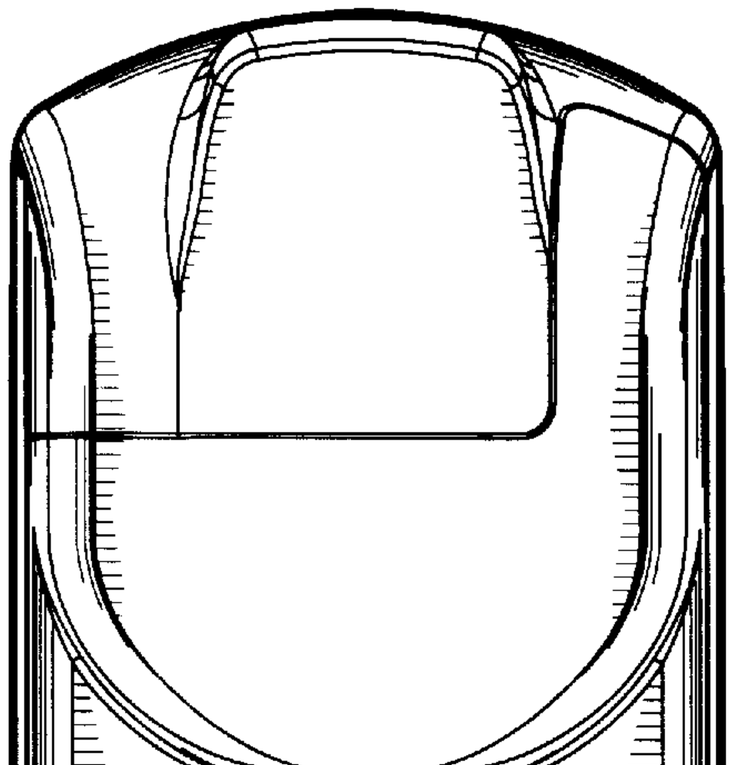

FIG.11

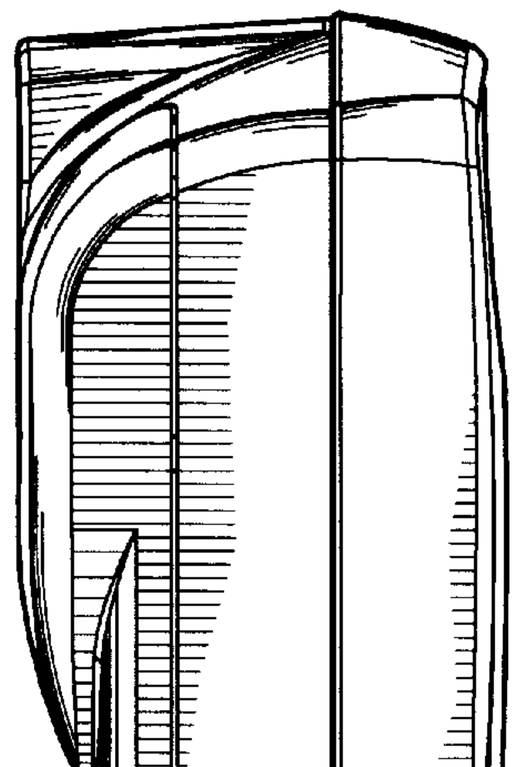

FIG.9