June 21, 1966 H. F. STOFFEL 3,256,626

MEDALLION

Filed Jan. 3, 1964

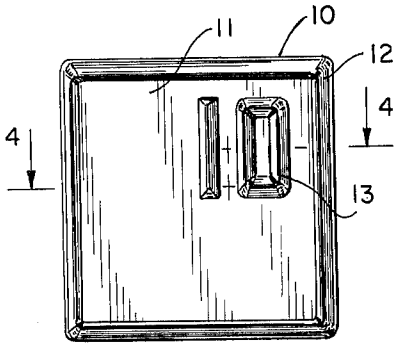

FIG. 1

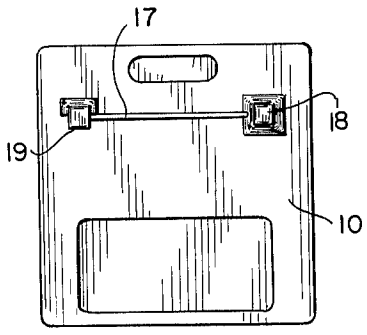

FIG. 2

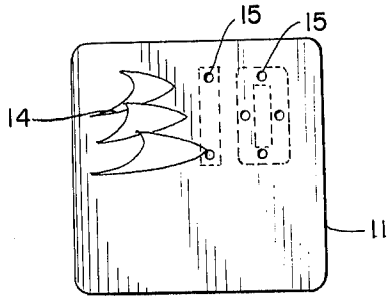

FIG. 3

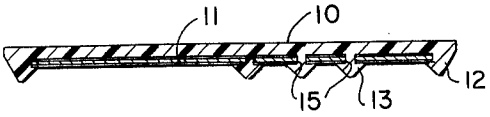

FIG. 4

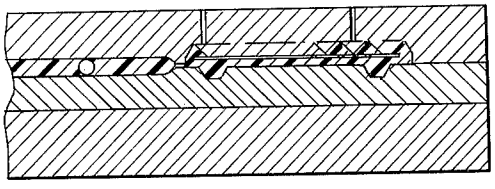

FIG. 5

INVENTOR
H. F. STOFFEL

BY

ATTORNEY

United States Patent Office

3,256,626
Patented June 21, 1966

3,256,626

MEDALLION

Hans F. Stoffel, Tuckahoe, N.Y., assignor to Stoffel Seals Corporation, Tuckahoe, N. Y.

Filed Jan. 3, 1964, Ser. No. 335,493
1 Claim. (Cl. 40—1.5)

This invention relates to ornamentation and display and more particularly to badges and signs having portions thereof of a contrasting nature including color and configuration in order to provide a more pleasing appearance and to emphasize certain features of the display.

It is an object of the present invention to provide a badge or article of display and method of manufacture in which the badge has a sheet portion to which is molded a back and rim portion integral with a portion thereof which projects through the sheet portion to form a three-dimensional contrasting design with the flat sheet member.

These and other objects of the invention will be apparent from the following description in conjunction with the accompanying drawing, in which:

FIG. 1 is a plan view of a badge in accordance with the present invention;

FIG. 2, a rear view;

FIG. 3, a plan view of the sheet material element;

FIG. 4, an enlarged section on the line 4—4 of FIG. 1; and,

FIG. 5, a schematic diagram of the molding operation.

Briefly stated the invention includes molding a display member or badge by injection molding plastic through the face and around the sides of a sheet member, the plastic forming the frame or rim and the central or emblem portion of the article and the sheet material appearing to form only an integral background portion thereof, and the article produced thereby.

With futher reference to the drawing, there is illustrated one embodiment of the invention, including a badge 10 having an interior portion 11, a frame or rim 12 and indicia or numerals 13. The interior portion is shown as having lithographed thereon a message or ornamentation portion 14.

The interior portion 11, as indicated in FIG. 4, consists of a sheet member which may be flat or of other configuration, having apertures 15 spaced beneath the indicia or numerals 13. The rear side of the portion 11 may, if desired, be coated to correspond with the color of the plastic material used in forming the border 12 and the indicia 13.

In the manufacture of the device the interior portion 11 is placed in a mold, as indicated in FIG. 5, and plastic is injected into the mold from the rear side, the plastic spreading over the back of the portion 11 and around its border to form the raised rim 12, the connecting frame or body portions 16 as indicated in FIG. 2, and to flow through apertures 15 to form the indicia 13.

A pin 17 for attaching the badge may be mounted on suitable blocks or bosses 18, 19, one end of the pin being free and retained over an overhanging lip of the block 19, the blocks being formed integrally in the molding operation.

Accordingly, it will be seen that the medallion includes a sheet element through which and around which plastic is molded in a single operation, such plastic constituting the frame, the body and the indicia or symbol, the latter formed on and projecting from the front face of the sheet element. Such indicia may be of contrasting color with respect to the exposed interior portion, including any printing thereon, and by reason of projecting outwardly from the flat surface within the frame the inner and outer exposed portions of the plastic complement each other, the inner being framed by the outer.

It wil be obvious to one skilled in the art that various changes may be made in the invention without departing from the spirit and scope thereof and therefore the invention is not limited by that which is illustrated in the drawing and described in the specification, but only as indicated in the accompanying claim.

What is claimed is:

A display device comprising a thin sheet interior element having a border and one or more relatively small apertures, and an integral plastic body secured to said interior element, said plastic body having a first portion forming a back for said element, a second portion forming a rim engaging the border of said element, and a third portion extending through said apertures and forming indicia on the opposite side of said element from said back.

References Cited by the Examiner

UNITED STATES PATENTS

2,411,987	12/1946	D'Antonio	40—1.5
2,902,782	9/1959	Coleman	40—1.5
2,925,625	2/1960	Souza	264—320
2,994,925	8/1961	Gita	264—247

EUGENE R. CAPOZIO, *Primary Examiner.*
W. J. CONTRERAS, *Assistant Examiner.*