ADJUSTABLE MAGNETIC SKI BINDING

Filed July 7, 1969 3 Sheets-Sheet 1

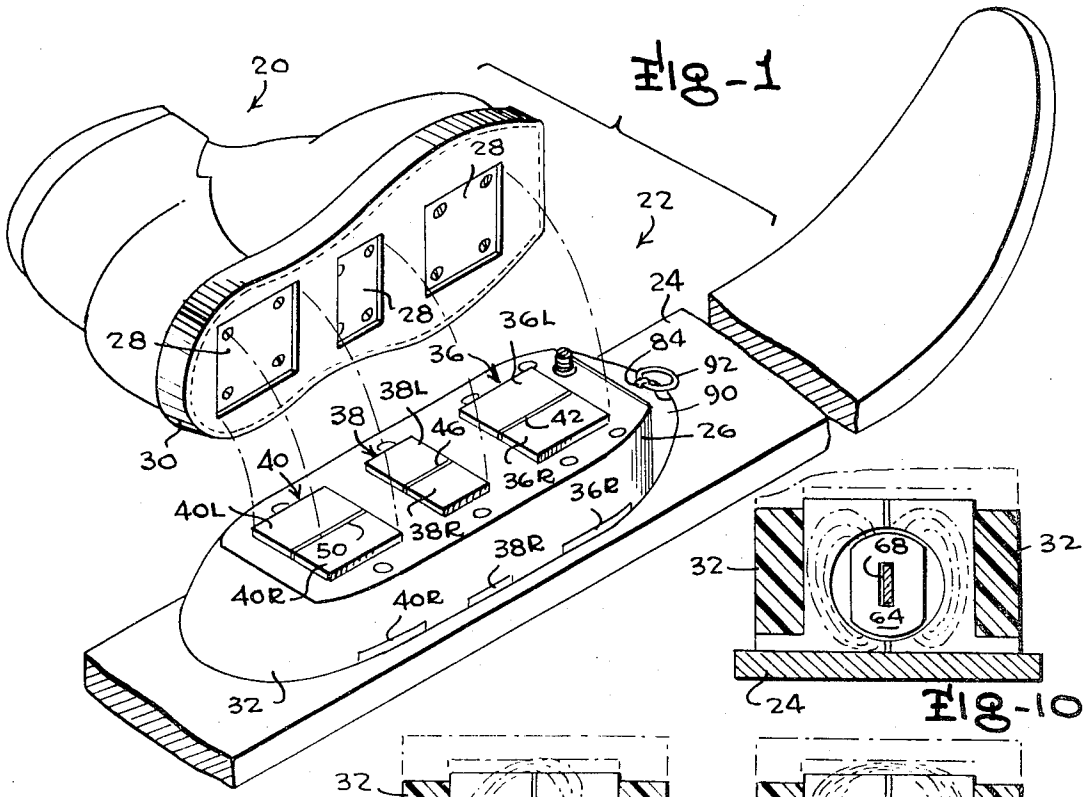

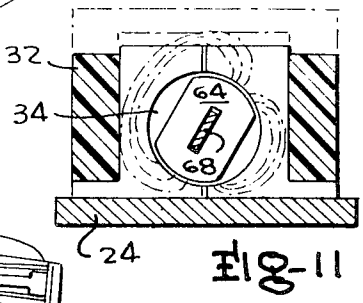

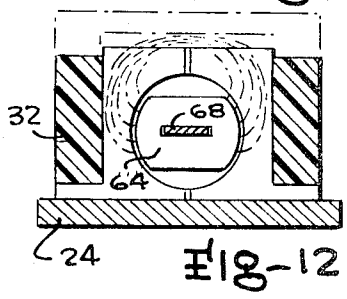

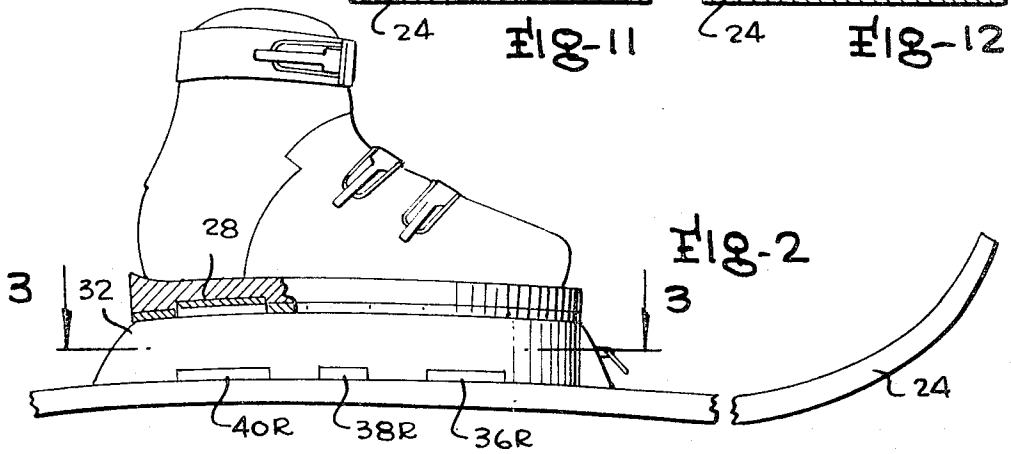

INVENTOR

RICHARD C. LARSON

BY

Mason, Fenwick & Lawrence

ATTORNEYS

ADJUSTABLE MAGNETIC SKI BINDING

Filed July 7, 1969 3 Sheets-Sheet 2

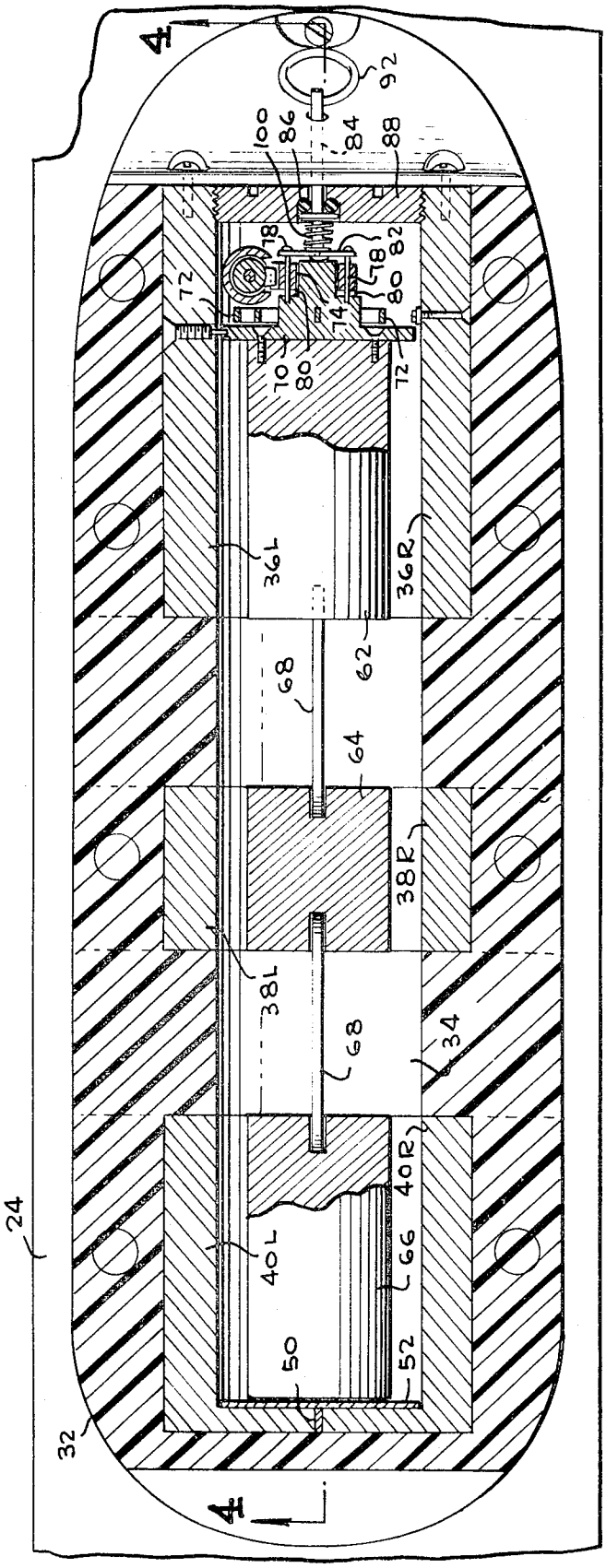

FIG. 3

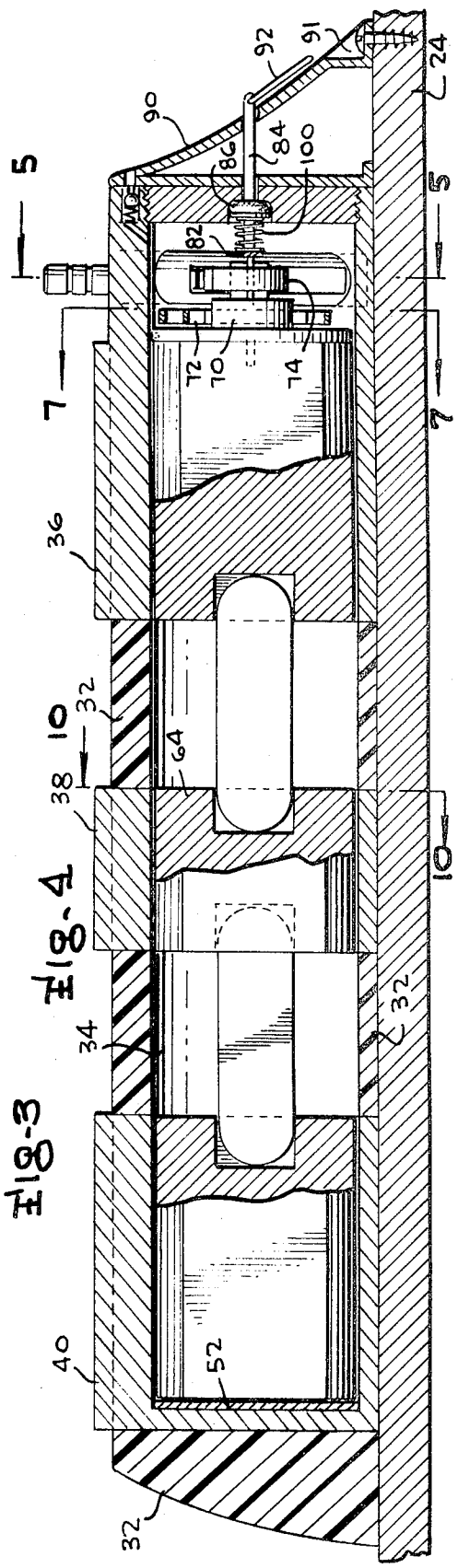

FIG. 4

ADJUSTABLE MAGNETIC SKI BINDING

Filed July 7, 1969 3 Sheets-Sheet 3

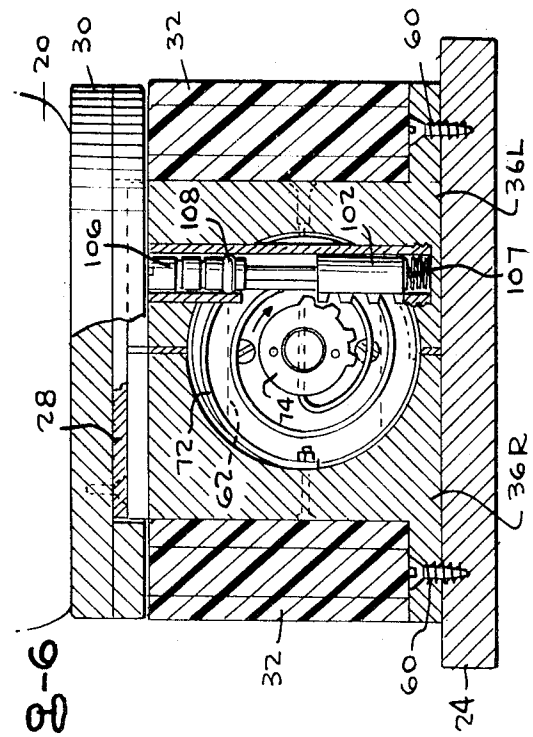

FIG-6

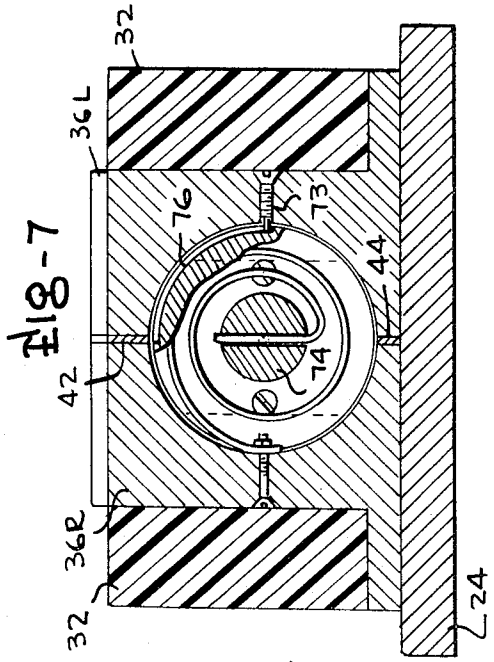

FIG-7

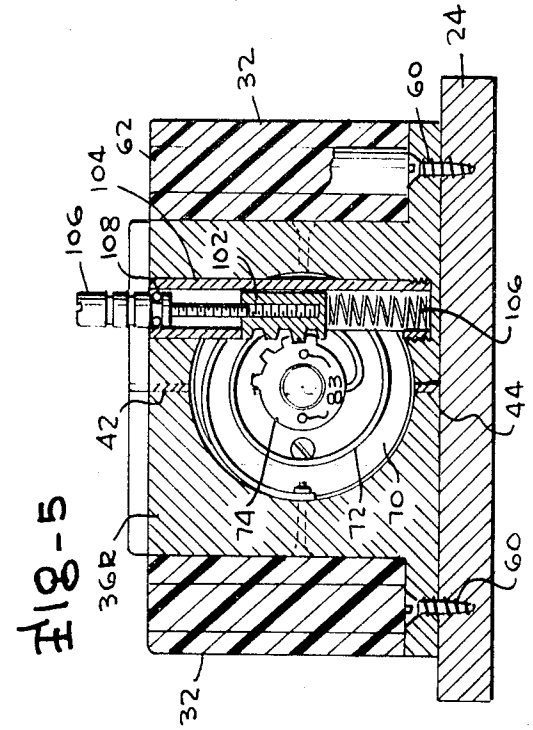

FIG-5

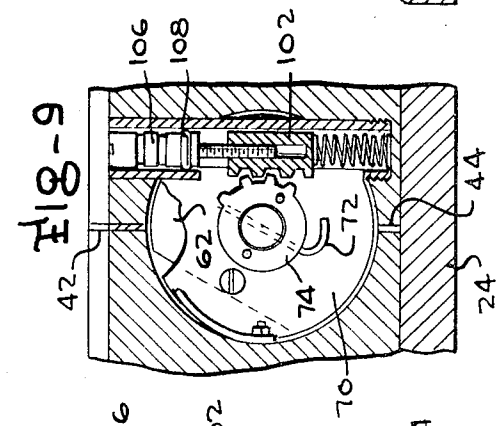

FIG-9

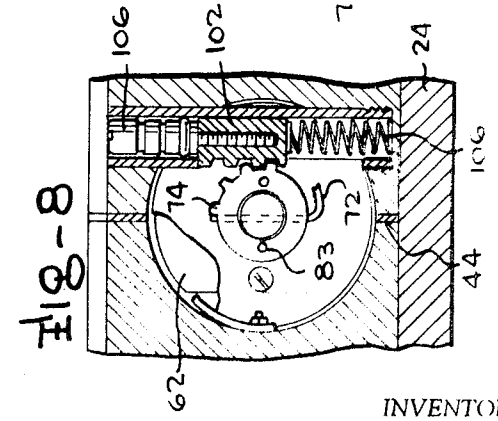

FIG-8

INVENTOR

RICHARD C. LARSON

BY

Mason, Fenwick & Lawrence

ATTORNEYS

United States Patent Office

3,667,771

Patented June 6, 1972

3,667,771

ADJUSTABLE MAGNETIC SKI BINDING

Richard C. Larson, 4420 Great Oak Road,
Rockville, Md. 20853

Filed July 7, 1969, Ser. No. 839,584
Int. Cl. A63c *9/08*
U.S. Cl. 280—11.35 M 20 Claims

ABSTRACT OF THE DISCLOSURE

A magnetic ski binding employing a plurality of rotatable bar magnets for attracting magnetically attractable plates in the sole of a ski boot including ski mounted plunger means for rotating the bar magnets from a shunted position in which the boot is not attracted by the magnets to a boot attracting position upon the placing of a ski boot on the plunger means with the plunger means being adjustable to vary the extent of magnet rotation and consequently vary the force with which the boot is attracted to the ski wherein spring means are also provided for moving the magnets to the shunted position to enable an easy removal of the boot from the ski.

BACKGROUND OF THE INVENTION

This invention is directed to the field of ski bindings and is particularly directed to the field of magnetic ski bindings in which magnetic means are employed for retaining a skier's boot in connection to a ski.

Many types of bindings or connectors have been employed for securing ski boots to skis. Originally, simple straps passing through the skis and buckled across the top of the boots were employed for this purpose; however, this method of connecting the skis to the boot resulted in frequent injury to the user by virtue of the fact that the connection would usually remain intact during spills or falls and although it was possible to select straps that would break upon being subjected to a given stress, the employment of such straps resulted in great inconvenience to skiers since the straps must be replaced after each such occurrence.

The obvious limitations of the strap-type bindings have resulted in their virtual elimination from use during recent years and replacement by a wide variety of mechanical clamp-type bindings which clamp the boot to the ski with a given amount of force and which, in many cases, are adjustable in order to vary the force required for separately the ski from the binding. However, the mechanical clamp-type bindings, while a vast improvement over the strap bindings, have suffered, and continue to suffer, from a number of inherent deficiencies which have remained unsolved up to the present time. Attempts to solve the problems of the clamp-type bindings have resulted in some highly sophisticated devices requiring quality materials, precision tooling, fine adjustments and lubrication of moving parts for the purpose of insuring safe operation. Consequently, such devices are expensive both to manufacture and maintain.

Another disadvantage of the known clamp-type bindings is occasioned by virtue of the fact that they are usually usable with a particular kind and size of boot and cannot be adjusted for other kinds and/or sizes of boots. While some of the prior known clamp-type bindings are adjustable for different boot sizes and for providing varying degrees of force necessary for separation of the ski and binding, such adjustments are time consuming and frequently require more mechanical dexterity than the average skier possesses. This problem is also aggravated by the gradual changes in size and/or shape of a given boot as occurs with the passage of time. Therefore, the

need for a versatile easily adjustable binding usable with a wide variety of ski boot sizes and/or types has not been met by the prior known clamp-type devices.

An additional problem in providing versatility of usage of ski bindings is that various users require varying amounts of break-away force necessary for separating the ski from the binding in accordance with the strength and size of the user. For example, women and chlidren require much less break-away force than does the average man in order to avoid injury occasioned by failure of the bindings to separate from the ski. This problem has been aggravated in recent years by the increased number of women and children participating in skiing and is one of the prime reasons why many of the later more sophisticated clamp-type bindings have become extremely complicated and complex in construction.

Another problem inherent in the mechanical clamp-type bindings is that they frequently fail to provide a uniform break-away release force for all angles and directions to which they may be subjected during usage. It has been recognized that an effective ski binding should release from the ski when subjected to forces in any one of ten angles or combinations thereof of a given amount. Since skiers fall in all directions, a ski binding should be capable of providing a release in all directions. Unfortunately, almost all ski bindings are capable of providing a reliable release in only three angles of force application and failure of such bindings to provide a reliable release when subjected to forces of a given degree at the other seven angles consequently results in thousands of fractures each year. Therefore, the need for a ski binding that will release upon the application of a given force in practically any direction has, as yet, remained unmet.

The deficiencies of the prior known clamp-type binding have resulted in several ski binding constructions employing magnetic couplings for connecting the bindings to the skier's boot. Unfortunately, the prior known magnetic coupling devices, while providing certain advantages over the mechanical bindings, have suffered other deficiencies which have precluded their wide-spread acceptance and adoption. For example, prior magnetic ski bindings have employed electro-magnetic means requiring the skier to carry a power supply connectible to the electro-magnetic means for energizing same. While such an arrangement is, in and of itself, inconvenient, such devices are additionally inconvenient in that they also require mechanical circuit connectors which frequently become corroded and require continuing maintenance in order to function properly.

Other magnetic ski bindings have employed permanent magnets in an effort to avoid the problems of the prior known bindings. However, the permanent magnet bindings heretofore known have suffered from a number of deficiencies such as bulkiness and lack of adjustability of the magnetic force with which the bindings attract the boot of the skier. Probably the greatest problem of the prior permanent magnetic-type bindings is the difficulty with which the skier's boot is removed from the binding at the completion of skiing activity. Additionally, some of the prior known permanent magnetic-type bindings present other problems during connection of the boot to the binding since the permanent magnets are always energized and snap the boot in position with certain misalignments being possible unless great care is taken.

Other attempts to provide a satisfactory ski binding have resulted in combinations of magnets and clamps in which magnetic means are employed for retaining the boot clamps in position. However, hybrid devices of this type have failed to gain widespread acceptance in that they fail to solve the problems of either the clamp-type bindings or the pure magnetic-type bindings.

This invention provides a solution to the problems of the prior known devices in that it can be usable with a wide variety of boot sizes or types without any adjustment whatsoever when changing from one boot size or type to another. Moreover, the instant invention is of simple and rugged construction in which all of the moving parts are protected within a casing and are not subjected to the deleterious effects of the environment in which they are employed. Additionally, the instant invention enables the usage of a permanent magnet for effecting the connection between a binding and a skier's boot. However, the magnetic attraction between the binding and the boot is provided gradually as the skier steps into the binding so that the boot can be properly aligned in position as the full force of the magnet is supplied. Additionally, the binding can be easily released from the boot upon the completion of skiing activity with practically no effort upon the part of the user.

Additionally, the instant invention provides a binding in which the release force necessary for separating the binding from the ski remains constant for an infinite number of angles through which the force may be applied. Therefore, the instant invention provides an extremely safe binding far superior to anything that has been previously known.

Still another feature of this invention enables an easy adjustment of the force with which the binding attracts the skier's boot by simple manual adjustment requiring neither additional tools or manual dexterity greater than that possessed by practically any skier.

SUMMARY OF THE INVENTION

Therefore, it is the primary object of this invention to provide a new and improved magnetic ski binding of great versatility.

Obtainment of the object of this invention is enabled through the provision of a ski binding in the form of a casing member enclosing a plurality of permanent bar magnets which are supported for rotation within a bore extending parrallel to the ski within the casing. The sole of the skier's boot includes a plurality of metal magnetically attractable plates affixed to be attracted by the permanent bar magnets of the binding. Spring means connected to the permanent magnets normally urge the magnets into a shunted position in which their pole pieces are adjacent shunt means which effectively prevent any substantial magnetic attraction from being exerted exteriorly of the casing. However, a foot actuated plunger extends upwardly from the binding casing to be engaged by the skier's foot when it is desired to attach the binding to the boot. Depression of the plunger by the skier's boot serves to rotate the magnets into another position in which the magnetic lines of force are no longer shunted and are effectively oriented through the plate members in the sole of the boot to provide a holding force between the binding and the boot. The upper end of the plunger is provided with a vertically adjustable member which determines the extent to which the permanent magnets are rotated and consequently determines the amount of force with which the boot is attracted by the magnets.

Disconnection of the drive between the plunger member and the magnets is enabled by a simple release mechanism which is normally activated by either the ski pole tip upon completion of skiing activity or manually to consequently permit the magnets to return under the urging of the biassing spring to their shunted position. It is then possible for the skier to merely lift the boot from the ski with little or no manual effort being required.

Moreover, the instant ski binding is extremely versatile in that it can be employed with a wide variety of boots with the only requirement being that the magnetic plates should be positioned so as to be attracted by the magnets employed in the binding. Additionally, the device is easily adjustable by a mere turning movement of the extension member on the plunger and can consequently be used with little or no difficulty by a wide variety of persons having ski-binding break-away force requirements.

DESCRIPTION OF THE DRAWINGS

FIG. 1 is a perspective view illustrating the preferred embodiment of this invention as associated with a ski and a ski boot;

FIG. 2 is a side elevational of the preferred embodiment of the invention with portions broken away for clarity and with the boot being connected to the binding;

FIG. 3 is a sectional view taken along lines **3—3** of FIG. 2;

FIG. 4 is a sectional view taken along lines **4—4** of FIG. 3 illustrating the parts in the position in which the magnets are shunted so as to exert no substantial external force;

FIG. 5 is a sectional view taken along lines **5—5** of FIG. 4;

FIG. 6 is a sectional view similar to FIG. 5 but illustrating the parts in the position which is assumed when a boot is being retained in position on the binding by the full force of the permanent magnets;

FIG. 7 is a sectional view taken along lines **7—7** of FIG. 4;

FIG. 8 is a sectional view similar to FIG. 6 with portions removed illustrating the device in a storage condition of adjustment in which the magnets are shunted and with the actuator pump being adjusted to a recessed position within the casing to prevent accidental actuation of the magnets;

FIG. 9 is similar to FIG. 8 illustrating an intermediate magnet position of adjustment in which less than the full magnetic force capability is exerted;

FIG. 10 is a sectional view taken along lines **10—10** of FIG. 4 and corresponds to FIG. 5 in illustrating the shunted position of the magnets;

FIG. 11 is a sectional view taken along lines **10—10** of FIG. 4 corresponding to FIG. 9 and illustrates an intermediate position in which partial magnetic force is exerted exteriorly of the casing; and

FIG. 12 is a sectional view taken along lines **10—10** of FIG. 4 illustrating the position of the permanent magnet in which maximum exterior force is provided by the binding and corresponds to FIG. 6.

DESCRIPTION OF THE PREFERRED EMBODIMENT

Attention is initially invited to FIG. 1 of the drawings which illustrates the basic components of the preferred embodiment which includes a boot member generally designated **20** and a ski member generally designated **22**. Ski member **22** includes a ski **24** which has a magnetic binding casing means **26** attached to its upper surface. A plurality of magnetically attractable plates **28** are positioned inwardly within recesses formed in the sole **30** of the boot member **20**.

Casing **26** includes an exterior shell member **32** formed of suitable non-magnetic material such as somewhat flexible plastic or the like. A bore **34** (FIG. 3) extends centrally through shell **32** and is provided with a plurality of recesses along its length which respectively receive three magnetic keeper pairs each of which pairs is associated with a permanent magnet. The keeper pairs comprises a forward keeper pair **36**, a middle keeper pair **38** and a rearward keeper pair **40** as shown in FIG. 4 of the drawings. The forward keeper pair **36** is formed of a left keeper block **36L** and a right keeper block **36R** with the keeper blocks being formed of ferrous material which is highly permeable to magnetic lines of force. The left and right keeper blocks are separated from each other by an upper non-magnetic field separator plate **43** and a lower field separator plate **44**. Similarly, the middle keeper pair **38** consists of a left keeper block **38L** and a right keeper block **38R** separated at their upper and lower portions by non-

magnetic separator plates **46** and **48** respectively. The rearward keeper pair **40** constitutes a similar construction which includes a left keeper block **40L** and a right keeper block **40R**; however, keeper blocks **40L** and **40R** are separated by a U-shaped separator plate **50** which extends along their upper and lower surfaces and also serves to separate the blocks on their left end portions as viewed in FIG. 3. Additional magnetic shielding is provided with the rearmost blocks by means of a shielding disc **52** illustrated in FIG. 3.

The interiors of the various keeper blocks are of arcuate configuration having identical curvature to the curvature of bore **34** so that a continuous cylindrical surface is provided along bore **34** as best illustrated in FIG. 3. Additionally, it should be noted that each keeper block is provided with a lateral lug extending outwardly through notches in the base of the exterior shell member **32**. Each of these lugs has a screw **60** extending through it and connected to the ski **24** as illustrated in FIG. 5 etc. Additionally, other screws (not shown) or adhesive means are provided for connecting the shell **32** to the ski and all of the screws are covered by means of plugs **62** extending through the shell.

It should be noted that all of the keeper blocks extend above the upper surface of shell **32** and are dimensioned to be matingly received within the openings in the sole of boot **20** as shown in FIG. 1.

A forward permanent magnet **62** is mounted for rotation within the confines of the forward keeper block members **36L** and **36R** and a middle permanent magnet **64** is similarly located for rotation within the confines of the arcuate interior surfaces of the blocks **38L** and **38R**. A rearward permanent magnet **66** is mounted within the confines of the rearward blocks **40L** and **40R** in a similar manner. Each of the permanent magnets is a bar-type magnet with the pole portion having a curvature matingly received within bore **34**. However, sufficient clearance is provided between the respective magnets and the bore in order that the magnets may be easily rotated when desired. Flexible non-magnetic connector plates **68** provide a flexible drive connection between the adjacent magnets as illustrated in FIG. 3. The flexible nature of plates **68** and shell **32** permits flexing of the ski during use.

Each of the magnets exerts a high magnetic force (which can be in the order of sixty-seven pounds for each cubic centimeter of magnet) and provides more than adequate force for retaining the boot on the top surface of shell member **32**.

Forward permanent magnets **62** has combination shield and drive member **70** formed of brass or other suitable non-permeable material connected to its forward end and which, when rotated, serves to rotate magnet **62** along with the other magnets **64** and **66**. A coil spring **72** connected on one end to the right keeper block **36R** has its other end extending through a slot in drive member **70**. Spring **72** continuously biasses drive member **70** in a counterclockwise direction as viewed in FIG. 5; however, a stop crew **73** extends into a peripheral slot **76** which extends over 90° of the periphery of the drive member **70** and serves to normally limit the counterclockwise rotation of the drive member and the associated magnets to the position illustrated in FIG. 7. In this position, the magnets are vertically oriented as shown in FIG. 10 so that the magnetic lines of force are completely shunted by means of the respective keeper pairs. Consequently, the magnets exert little or no magnetic force exteriorly of the shell **32**.

It is necessary that the magnets be rotated from the position illustrated in FIG. 10 in order that they may assume a position in which the magnets are effective for attracting the plates **28** in the skier's boot. Means for positioning the magnet includes the aforementioned drive member **70** and additionally include a mutilated pinion **74** supported for rotation on the forwardmost portion of the drive member **70**.

A drive connection is established between the mutilated pinion **74** and the drive member **70** by means of a U-shaped drive connector which is formed of a pair of drive pins **78** connected on one end to a pin supporting connecting bar **82** and extending through axially parallel openings **83** in the mutilated pinion **74** to be received within a pair of drive recess openings on an intermediate forwardly facing surface **80** of the drive member **70** as best shown in FIG. 3. The pin supporting connecting bar **82** connects the rear ends of drive pins **78** and is, in turn, rotatably connected to the actuator rod **84** extending forwardly from the bar through a seal means **86** and a forward plug shield **88** threadably fitted in the forward end of the opening extending through the keeper blocks **36L** and **36R** and their associated separators **42** and **44**. Rod **84** also extends through a forward cover plate **90** forming the forward termination of the binding means. An actuator ring **92** is connected to the forward end of rod **84** and a coil compression spring **100** encircling rod **84** is mounted between seal and bar **82** for biassing bar **82**, rod **84** and pins **78** to the left in an obvious manner as shown in FIG. 3. Consequently, pins **78** are normally received within the drive recesses in surface **80** so that rotation of the mutilated pinion **74** consequently serves to rotate member **70** and magnets **62**, **64** and **66** drivingly connected thereto. It should be noted that stop screw **73** normally positions the openings in surface **80** in alignment with pins **78** when the parts are in the positions shown in FIGS. 5 and 7.

Rotation of pinion **74** is effected by a vertically oriented drive member in the form of a reciprocable rack **102** mounted in a tube **104** and having teeth engageable with the teeth of pinion **74**. Downward movement of rack **102** from its position shown in FIG. 5 serves to rotate the magnets to a boot holding position. Rack **102** is biassed upwardly by a coil spring **106** and has its rack teeth extending outwardly through a side opening in the vertical tube **104** with the uppermost tooth of the rack engaging the top of the opening to limit the vertical movement of the rack. Additionally, a vertically adjustable threaded plunger member **106** is threadably connected to rack **102** for vertical adjustment with respect to rack **102** so as to provide a variation in overall length of the two members. Actuator plunger **106** normally extends above the uppermost surface of shell **32** in the manner shown in FIG. 5. A seal **108** is provided about plunger member **106** for preventing snow and moisture from entering the interior of tube **104**.

The manner in which the preferred embodiment is used will now be discussed with initial reference being made to FIG. 1 of the drawings. It will be assumed that the respective parts of the device are in the position illustrated in FIGS. 5 and 10 with the plunger **106** extending above the upper surface of the shell **32**. The skier steps onto the ski member **22** with the plates **28** being in substantial alignment with the upper ends of the various keeper blocks and in doing so, gradually depresses the plunger **106** to the position illustrated in FIG. 6 as the upper ends of the blocks enter the recesses in the boot sole. This downward movement of plunger **106** results in a consequent downward movement of rack **102** which serves to rotate mutilated pinion **74** in a clockwise direction from the FIG. 5 position to the FIG. 6 position. This rotation is accomplished against the bias of spring **72** as will be obvious from inspection of the drawings. Rotation of pinion **74** to the FIG. 6 position causes all of the magnets to rotate from the vertical orientation of FIG. 10 in which substantially no magnetic force is exerted exteriorly of shell **32** to the position of FIG. 12 in which maximum magnetic is exerted exteriorly of the shell. This magnetic force is gradually applied to plates **28** so that they become firmly attached to the upper surfaces of the respective blocks **36L** and **36R** and the skier's boot is then consequently firmly attached to the ski member.

The mating relationship of the blocks to the sole recesses enables accurate alignment of the boot to the bind-

ing and also provides a degree of resistance to lateral movement between the boot and the bindings. However, the ski boot will become detached from the keeper blocks upon being subjected to a given force in any one of an infinite number of directions if the skier should have a fall resultant in such a force. Detachment of the skier's boot under such circumstances will permit the actuator plunger **106** to be returned upwardly by the coil compression spring **107** to resume the position shown in FIG. 5. Consequently, the magnets will be continuously protected magnetically while being automatically returned to their shunted position of FIG. 10 so that their strength will be preserved at all times.

Moreover, the boot **20** can be easily removed upon completion of skiing by the skier's pulling the ring **92** and actuator rod **84** forwardly so as to withdraw drive pins **78** from the drive recesses in the surface **80** of the drive member **70**. Such withdrawal of the pins **78** from their drive recesses serves to permit spring **72** to rotate the drive member **70** in a counterclockwise direction as viewed in FIG. 5 etc. and permits the magnets to return to the FIG. 10 shunted position in which they exert little or no force on the plates **28** in the sole of the boot. Consequently, the boot can be easily lifted from the ski member. Additionally, it should be noted that actuator rod **84** can also be moved forwardly to enable removal of the boot by the skier's insertion of his ski pole through actuator ring **92** to consequently pull the rod **84** forwardly. Use of the ski pole for pulling rod **84** forwardly is made all the more convenient by virtue of the forward recess **91** into which the forward end of the ski pole can be passed following insertion through ring **92** so that a subsequent pivotal movement of the upper end of the ski pole will serve to reciprocate the rod **84** forwardly with a maximum of ease.

The skier merely lifts his foot from the ski member following discontinuation of the magnetic attraction of the permanent magnets so that the actuator plunger **106** then reciprocates upwardly to the FIG. 4 position to consequently cause the pins **78** to re-enter the drive recesses in surface **80** upon their becoming realigned with said recesses. The device is then in condition for a subsequent skiing operation.

It is sometimes desirable to employ a magnetic attractive force between the boot and the ski member that is less than the maximum force obtained when the magnet is in the FIG. 12 position. This result is easily accomplished by merely rotatable adjusting the actuator plunger **106** so that it moves downwardly with respect to rack **102** and the skier's subsequent depression of actuator plunger **106** consequently cannot move the rack to the full extent of movement previously possible. Therefore, the magnets will assume an intermediate position such as that illustrated in FIG. 11 in which the attractive force between the magnet and the plates **28** is somewhat less than the force that would be exerted when the magnets are in the FIG. 12 position. In all other respects, the operation would be the same as that previously discussed.

It should be kept in mind that the foregoing discussion relates to the preferred embodiment of this invention and other modifications will occur to those skilled in the art which will not depart from the spirit and scope of this invention as set forth in the appended claims. For example, the number of magnets employed can be varied if desired and it would also be possible to employ two parallel rows of magnets if such should be deemed desirable. Moreover, it would be possible to reverse the position of the magnets and the magnetically attractable plates so that the magnets would be incorporated in the sole of the boot with the plates being mounted on the ski per se.

I claim:

1. A releasable connector means for providing a magnetic holding force between a ski boot member and a ski member comprising magnetically attractable means mounted on one of said members, means supporting and rotatably mounting permanent magnet means on the other member and positioning means for rotating said movable permanent magnet means between a first position in which the lines of magnetic force of said permanent magnet means pass through and exert a holding force on said magnetically attractable means so that considerable force is required for separating said members and a second position in which the lines of magnetic force of said permanent magnet means are shunted through keeper means adjacent said permanent magnet means so that said permanent magnet means exerts no substantial holding force on said magnetically attractable means and said members can be separated with ease.

2. The invention of claim **1** wherein said positioning means includes adjustable means for enabling a selected variation of said first position to consequently vary the degree to which said magnet means is shunted to provide a resultant variation of said holding force so that a holding force of desired strength can be obtained.

3. The invention of claim **2** wherein said permanent magnet means is enclosed in casing means attached to the top side of said ski member and said magnetically attractable means are metal members attached to the sole of said ski boot member.

4. The invention of claim **3** wherein said permanent magnet means comprises plural permanent magnets supported in alignment in a longitudinal bore in said casing means.

5. The invention of claim **4** in which each of said permanent magnets comprises a bar magnet mounted with its axis perpendicular to the axis of said longitudinal bore for rotation about the axis of said bore.

6. The invention of claim **5** wherein said positioning means includes a driver member connected to said magnets for rotating said magnets to either of said first or second positions, spring means connected to said driver member for biassing said driver member and said permanent magnets toward stop means engageable by said driver member to position said permanent magnets in said second position, a drive pinion, a releasable drive connection between said drive pinion and said driver member, rack means engaged with said pinion for rotating said pinion and said permanent magnets against said biassing force of said spring means toward said first position and wherein said adjustable means includes a rack actuator plunger adjustably connected to said rack and extending above the top of said casing means to be engaged by the sole of said ski boot to move said rack to consequently rotate said permanent magnets toward the first position with the extent of rotation and resultant holding force being determined by the extent to which said rack actuator plunger initially extends above said casing.

7. The invention of claim **6** wherein the pole ends of said bar magnets are arcuate and are matingly supported in said bore for rotation therein.

8. The invention of claim **7** additionally including flexible connectors between said permanent bar magnets for permitting flexure of said ski while retaining a rotary drive connection between said magnets.

9. The invention of claim **4** wherein said keeper means comprises first and second keeper blocks adjacent each of said permanent magnets and separated by first and second magnetic field separator plates.

10. The invention of claim **9** in which each of said permanent magnets comprises a bar magnet mounted with its axis perpendicular to the axis of said longitudinal bore for rotation about the axis of said bore.

11. The invention of claim **10** wherein said first and second field separator plates are oriented in a vertical plane passing through the axis of rotation of said permanent magnets.

12. A magnetically operable ski binding for attachment to a ski for providing a magnetic holding force for a ski boot having magnetically attractable elements associated with its sole, said binding comprising permanent magnet

means which when in a first position exert a maximum magnetic force capable of attracting said magnetically attractable elements, shunt means for shunting the lines of magnetic force from said magnet means when said magnet means is positioned in a second position so that no substantial external magnetic force is created by said magnet means and means for moving said magnet means from said second position toward said first position in response to the placing of a ski boot on said binding so that said magnetic means will become effective for attracting said magnetically attractable elements to retain said boot on said binding.

13. The invention of claim **12** additionally including means for biassing said magnet means towards said second position to return said magnet means to said second position upon removal of said boot from said binding.

14. The invention of claim **13** wherein said means for moving said magnet means from said second position includes adjustable means for adjusting the extent to which said magnet means is moved from said second position to provide a variation in the external magnetic force provided by said magnet means for attracting the magnetically attractable elements in the sole of said ski boot.

15. The invention of claim **14** wherein said magnet means comprises bar magnet means mounted for rotation and said shunt means comprises first and second shunt blocks mounted adjacent said bar magnet means.

16. The invention of claim **15** wherein said shunt blocks extend above the upper surface of a shell means encasing said magnet means to be received within recesses in the sole of said ski boot.

17. The invention of claim **16** wherein said means for moving said magnet means includes reciprocable plunger means extending above the upper surface of said shell means for engagement by said ski boot.

18. The invention of claim **17** wherein said means for moving said magnet means additionally includes pinion means, disconnectible drive means connecting said pinion means to said bar magnet means for enabling rotation of said bar magnet means, rack means on said plunger means engaged with said pinion means so that downward reciprocation of said plunger means serves to rotate said pinion and manually operable means for disconnecting said drive connection between said pinion and said magnet means so that spring biassing means will return said magnet means to said second position irrespective of the position of said plunger means.

19. The invention of claim **18** wherein said bar magnet means comprises plural bar magnets oriented with their longitudinal axes perpendicular to their axis of rotation and connected by flexible connector plates.

20. The invention of claim **16** additionally including vertically oriented field separator plates between said first and second shunt blocks.

References Cited

UNITED STATES PATENTS

2,276,826	3/1942	Crowther	280—11.35 M
3,246,907	4/1966	Chisholm	280—11.35 M
3,251,607	5/1966	Wren	280—11.35 M
3,414,283	12/1968	Salomon	280—11.35 M

FOREIGN PATENTS

1,387,319	12/1964	France	280—11.35 CB

BENJAMIN HERSH, Primary Examiner

M. L. SMITH, Assistant Examiner