Nov. 22, 1938. E. F. FISHER 2,137,682

DRYING OVEN

Filed March 27, 1937

FIG. 1.

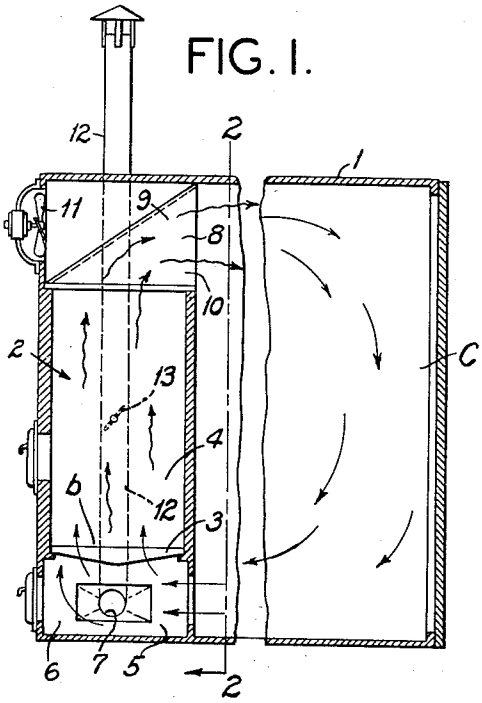

FIG. 2.

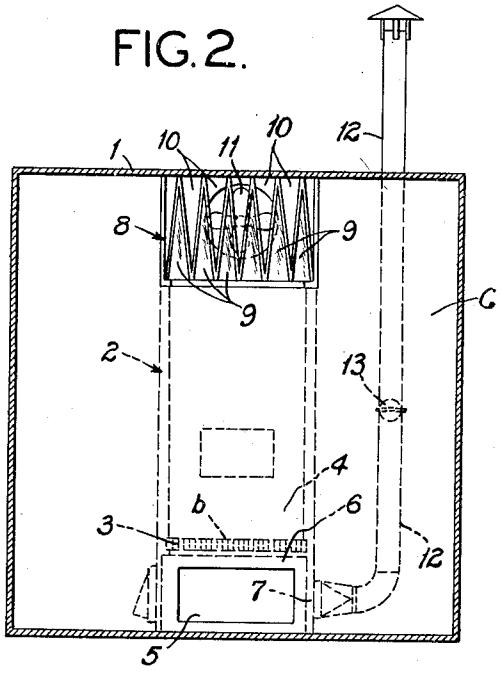

FIG. 4.

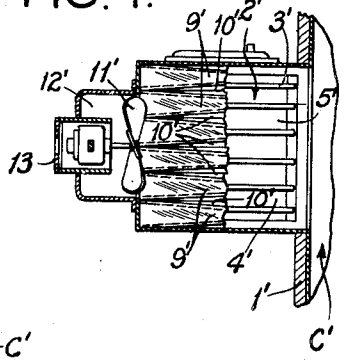

FIG. 3.

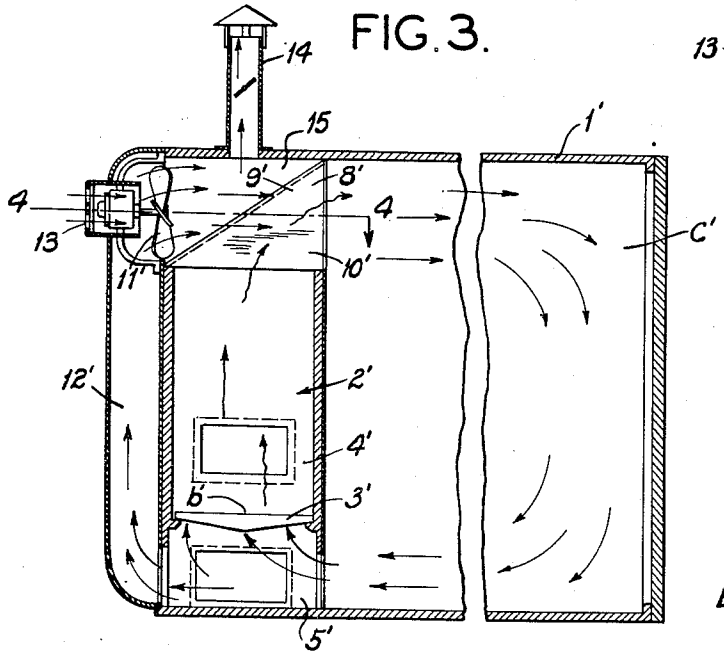

INVENTOR;
ERNEST F. FISHER
BY Harry A. Beinus
ATTORNEY

Patented Nov. 22, 1938

2,137,682

UNITED STATES PATENT OFFICE

2,137,682

DRYING OVEN

Ernest F. Fisher, Springfield, Ill.

Application March 27, 1937, Serial No. 133,349

3 Claims. (Cl. 34—19)

My invention has relation to improvements in drying ovens and it consists in the novel features of construction more fully set forth in the specification and pointed out in the claims.

The invention relates particularly to ovens for the drying of various articles of manufacture which require drying at some point in the manufacturing process. One such instance is the manufacture of cores for making castings.

The principal object of the invention is the circulation of air through a drying chamber and also through a suitable heater, to which circulation are added increments of atmospheric air to assist in the combustion within the heater.

A further object is to inject the atmospheric air into the body of the recirculated air so as to become thoroughly commingled therewith and supply air for oxidizing purposes in the drying of products which are benefited by such oxidation, and not appreciably reduce the oven temperature at any point.

It is also the object of the invention to cause the increments of fresh atmospheric air to traverse the oven before passing to the heater so that this air will be preheated and thus expedite the combustion within the furnace or heater.

Other advantages of the invention will be better apparent from a detailed description in connection with the accompanying drawing, in which:

Figure 1 is a middle vertical longitudinal section through a drying oven embodying the invention; Fig. 2 is a vertical cross section taken on a plane indicated by the line 2—2 of Fig. 1; Fig. 3 is a section similar to that shown in Fig. 1 of a slightly modified form of the invention; and Fig. 4 is a horizontal cross-sectional detail taken on a plane indicated by the line 4—4 of Fig. 3.

Referring to the drawing, my improved oven comprises a casing 1 enclosing a drying chamber C, at one end of which is a heater 2 in the form of a furnace having a grate 3, combustion chamber 4 and ash-pit 5. The furnace wall 6 is provided with an air inlet opening 7 leading to the ash-pit 5 and an air distributing unit 8 is arranged above and in communication with the combustion chamber 4 of the furnace. The air distributing unit is similar to that shown in my Patent No. 1,913,980 of June 13, 1933, and comprises a series of juxtaposed pyramid shaped air conductors 9 open at their bases for communication with the combustion chamber 4 and open on their front faces for communication with the chamber C. Because of the pyramid shape of the conductors 9, spaces 10 are formed between adjacent conductors through which air may be propelled by a fan 11 mounted on the casing 1 behind the distributing unit 8.

When air is forced through the spaces 10 by the fan 11 it will cause an induced flow of heated air and gases through the air conductors 9. In order that the quantity of air flowing through the fuel bed b may be controlled, a flue 12 is arranged in communication with the ash-pit 5. A damper 13 within the flue controls the volume of gases allowed to flow therethrough.

In the operation of the invention a fire is maintained within the combustion chamber 4 and the fan 11 is set in motion to cause a circulation of air throughout the drying chamber C. The fan, obviously, draws fresh atmospheric air into the drying chamber which induces into its path of circulation hot air and products of combustion from the air conductors 9 to maintain the circulation of a closed circuit of hot gases. The passage of these gases through the fire bed b will serve to purify them and free them from the contamination caused by contact with the articles being dried. In order to control the volume of gases flowing through the combustion chamber 4, the damper 13 in the flue 12 may be manipulated so as to cause the discharge, from the path of circulation, of any desired volume of gases up to the maximum capable of being carried by the flue.

In Figs. 3 and 4 I show a modified form of drying oven 1' in which the flue 12, shown in Fig. 1, is replaced by a flue 12' leading from the ash-pit 5' to the fan 11'. The function of the fan 11' is to recirculate practically all of the air through the drying chamber C', only small quantities of atmospheric air being admitted through the damper 13 so as to maintain combustion within the combustion chamber 4'.

A vent stack 14 is provided in the chamber 15 behind the air distributing unit 8' for venting any excess air that is introduced into the circulation.

The essential difference between the drying ovens shown in Figs. 1 and 3 is that the oven shown in Fig. 1 operates on what may be termed a "non-recirculating" principle since fresh air is continuously admitted directly into the path of the hot gases from the heater, while the oven shown in Fig. 3 operates on what may be termed a "recirculating" principle since the hot air from the oven is being continuously recirculated with only sufficient increments of fresh air to maintain combustion within the furnace or heater.

Obviously, the combustion chambers 4 and 4' of the respective furnaces may be replaced with any other heating device, such as steam coils.

Having described my invention, I claim:

1. A drying oven comprising a casing having a drying chamber, a heater adjacent to said casing, an air distributing head having an inlet from the heater, an inlet from the atmosphere outside the casing, and an outlet to the drying chamber, and means for inducing the circulation of air and hot gases through the heater, distributing head, and the drying chamber in a closed circuit.

2. A drying oven comprising a casing having a drying chamber, a heater adjacent to said casing, an air distributing head having an inlet from the heater, an inlet from the atmosphere outside the casing, and an outlet to the drying chamber, and means for inducing the circulation of air and hot gases through the heater, distributing head, and the drying chamber in a closed circuit, and said casing having a by-pass for conducting a portion of the gaseous medium around the heater for recirculation.

3. A drying oven comprising a casing having a drying chamber, a heater adjacent to said casing, an air distributing head having an inlet from the heater, an inlet from the atmosphere outside the casing and an outlet to the drying chamber, means for inducing the circulation of air and hot gases through the heater, distributing head and the drying chamber in a closed circuit, and a vent leading from said casing.

ERNEST F. FISHER.