(12) INTERNATIONAL APPLICATION PUBLISHED UNDER THE PATENT COOPERATION TREATY (PCT)

(19) World Intellectual Property Organization
International Bureau

(43) International Publication Date
18 November 2010 (18.11.2010)

PCT

(10) International Publication Number
WO 2010/132736 A1

(51) International Patent Classification:
H01R 13/52 (2006.01)

(21) International Application Number:
PCT/US2010/034845

(22) International Filing Date:
14 May 2010 (14.05.2010)

(25) Filing Language: English

(26) Publication Language: English

(30) Priority Data:
09006526.9 14 May 2009 (14.05.2009) EP

(71) Applicant *(for all designated States except US)*: **MOLEX INCORPORATED** [US/US]; 2222 Wellington Court, Lisle, IL 60532 (US).

(72) Inventors; and

(75) Inventors/Applicants *(for US only)*: **BOUCHAN, Christophe** [FR/FR]; c/o Molex Incorporated, 2222 Wellington Court, Lisle, IL 60532 (US). **DECHELETTE, Patrick** [FR/FR]; c/o Molex Incorporated, 2222 Wellington Court, Lisle, IL 60532 (US). **PLESSIS, Olivier** [FR/FR]; c/o Molex Incorporated, 2222 Wellington Court, Lisle, IL 60532 (US).

(74) Agent: **GOLDEN, Larry, I.**; Molex Incorporated, 2222 Wellington Court, Lisle, IL 60532 (US).

(81) Designated States *(unless otherwise indicated, for every kind of national protection available)*: AE, AG, AL, AM, AO, AT, AU, AZ, BA, BB, BG, BH, BR, BW, BY, BZ, CA, CH, CL, CN, CO, CR, CU, CZ, DE, DK, DM, DO, DZ, EC, EE, EG, ES, FI, GB, GD, GE, GH, GM, GT, HN, HR, HU, ID, IL, IN, IS, JP, KE, KG, KM, KN, KP, KR, KZ, LA, LC, LK, LR, LS, LT, LU, LY, MA, MD, ME, MG, MK, MN, MW, MX, MY, MZ, NA, NG, NI, NO, NZ, OM, PE, PG, PH, PL, PT, RO, RS, RU, SC, SD, SE, SG, SK, SL, SM, ST, SV, SY, TH, TJ, TM, TN, TR, TT, TZ, UA, UG, US, UZ, VC, VN, ZA, ZM, ZW.

(84) Designated States *(unless otherwise indicated, for every kind of regional protection available)*: ARIPO (BW, GH, GM, KE, LR, LS, MW, MZ, NA, SD, SL, SZ, TZ, UG, ZM, ZW), Eurasian (AM, AZ, BY, KG, KZ, MD, RU, TJ,

[Continued on next page]

(54) Title: ELECTRICAL CONNECTOR WITH WATER DRAINING

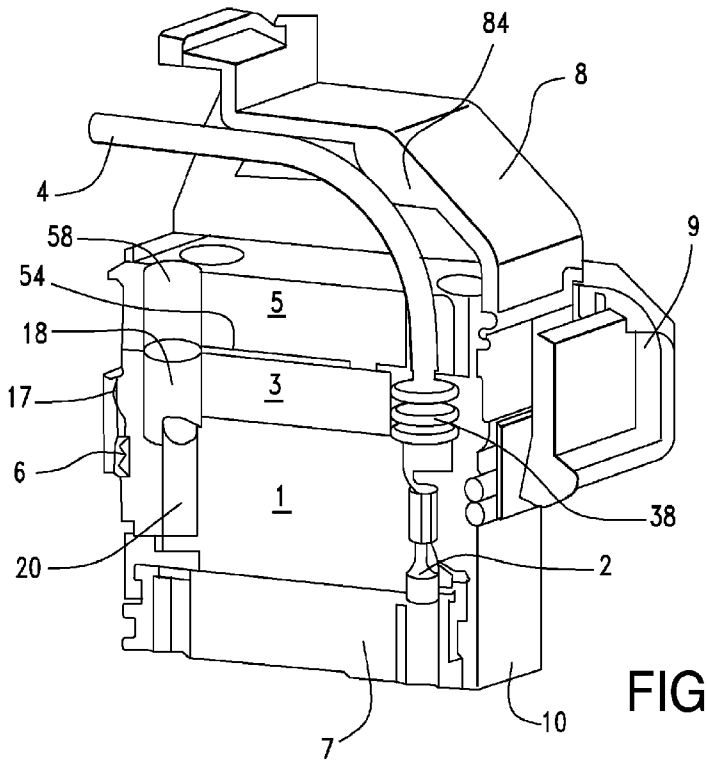

FIG.1

(57) Abstract: An electrical connector comprising a plurality of terminals (2) connected to conductors, a connector housing (1), sealing means (3) including a mat seal for sealing around the conductors, a back plate (5) forming passages for the conductors, a peripheral seal (6), a TPA member (7) for locking the terminals, a hood (8), and a lever (9), the connector housing having an extended housing cavity (13) that accommodates the mat seal and the back plate, wherein a drain passage is created between the upper surface of the sealing means and the outside of the connector housing for letting escape water that may have ingressed into the housing cavity of the connector housing.

WO 2010/132736 A1

TM), European (AL, AT, BE, BG, CH, CY, CZ, DE, DK, EE, ES, FI, FR, GB, GR, HR, HU, IE, IS, IT, LT, LU, LV, MC, MK, MT, NL, NO, PL, PT, RO, SE, SI, SK, SM, TR), OAPI (BF, BJ, CF, CG, CI, CM, GA, GN, GQ, GW, ML, MR, NE, SN, TD, TG).

Published:

— *with international search report (Art. 21(3))*

Attorney Docket No. A8-276 WO

ELECTRICAL CONNECTOR WITH WATER DRAINING

BACKGROUND OF THE INVENTION

This application claims priority to European Patent Application No. 09 006 526.9, filed May 14, 2009, which is incorporated herein by reference in its entirety.

FIELD OF THE INVENTION

The invention relates to an electrical connector for automotive applications comprising a plurality of terminals and a connector housing that has cavity formations for fixing the terminals and a grommet mat seal for sealing the conductors to the terminals as well as a back plate that forms passages for the conductors to the terminals.

Such electrical connectors are used in automobiles where they suffer from shocks and vibrations. Therefore, the terminals have to be fixed in the cavity formations of the connector housing in a vibration-safe manner, and to that end the terminals are latched and locked in the connector housing. There is the further need to protect the terminals against ingressing water, and to that end the grommet mat seal is provided protecting the cavities from above, and a peripheral seal around the connector housing protecting the terminals from below when the electrical connector is mated with a complementary connector. For doing so, a double-armed lever having two legs and a bridge between the legs is pivoted on trunnions of the connector housing and has cam slots for engagement in pegs of the complementary connector and press the connectors together with the peripheral seal therebetween. Furthermore, a hood for leading-in the conductors and for covering the connector housing from above is provided. However, the hood is open where the conductors enter.

Electrical connectors of that kind are known from FR 2,866,485 A1, WO 2006/034865 A1, EP 1 592 090 A1, WO 2006/108442 A1, EP 1 753 091 A1, JP 2007/035362 A and EP 1 903 641 A1. In most of these connectors, the grommet mat seal and the back plate are stacked in an extended cavity of the connector housing with the grommet mat seal and the back plate having nearly the same size. In some electrical connectors (FR 2,866,485 A1, WO 2006/108442 A1) the grommet mat seal has a surrounding flange which is pressed against a shoulder in the extended cavity of the connector housing so that the conductor passages in the back plate form cylindrical hollows

that are open in direction to the hood, but are sealed by the surrounding flange of the grommet mat seal. When the electrical connector is mounted in a vehicle with the hood on the upper side, water may enter through the opening in the hood and into the back plate passages which may fill with water. A risk exists that water will ingress into the terminal cavity formations of the connector due to capillarity effect of very small gaps between seal and housing wall. This risk is increased by the plenty of water that may accumulate in the back plate passages.

It is already known (US 6,203,362 B1, JP 04351865 A) to use a drain port in a backward cover of a connector that has a rear terminal insertion opening and a number of rubber stoppers for sealing the terminals. The rear surfaces of the rubber stoppers extend vertically, therefore, no water can accumulate on such surfaces.

SUMMARY OF THE INVENTION

It is an object of the present invention to minimize the risk of water ingress into the terminal cavity formations of an electrical connector.

It is a further object of the present invention to improve the mounting of the back plate into the connector housing.

It is still a further object of the invention to improve the conductor guiding in the electrical connector.

In principle, draining passages are created from a space above the grommet mat seal to the exterior of the connector housing so that water that may have entered the interior of the connector housing may escape benefiting from the shaking movement of the vehicle wherein the electrical connector is mounted. The draining passage is formed by a gap between the back plate and the grommet mat seal and by lateral openings through the housing walls of the connector. The lateral openings can simultaneously be used for locking the back plate within the connector housing, the back plate having lugs on its lateral sides that are engaged in the lateral openings of the connector housing.

For sealing the connector against ingressing water, sealing means are provided that include a grommet mat seal and a number of individual seals. The mat seal is arranged in a central cavity portion of the housing, and the individual seals are arranged in separate passages adjacent to the central housing cavity at the corners of the housing. Both, the mat

seal and the individual seals are covered by the backplate which has openings or passages registering to the sealing openings of the mat seal and of the individual seals. The openings of passages in the backplate can be shaped in view of guiding the wires or conductors without wobbling in the passages of the connector housing.

In a preferred embodiment of the invention, the back plate has a basic shape of a right parallelepiped with corner passages near the corner edges for the entry of cables or thicker conductors, and smaller passages in the central sector for the passage of smaller conductors. In this embodiment, the grommet mat seal has a basic shape of a right parallelepiped conforming to the central sector of the back plate. Registering to the corner passages of the back plate are openings in the connector housing for encompassing individual seals for the cables or bigger conductors at the corner edges of the back plate.

For creating the draining gap between back plate and grommet mat seal, preferably one of the back plate and the mat seal has ribs for supporting the back plate above the mat seal.

With the back plate having corner passages near its corners, it is possible to have inserted four conductors of bigger cross section and have the inner roof surface of the hood guiding the big conductors that make a bent from the vertical within the connector housing to the horizontal when leaving the hood. This will improve the seal performance for the bigger conductors.

BRIEF DESCRIPTION OF THE DRAWINGS

An embodiment of the invention will be described on hand of the drawings which show:

Fig. 1 is a vertical section through an electrical connector of the invention;

Fig. 2 is a perspective view on a connector housing;

Fig. 3 is a perspective view on a mat seal;

Fig. 4 is a perspective view on a back plate;

Fig. 5 is another perspective view onto the connector housing; and

Fig. 6 is a view on the connector without hood and conductors.

DETAILED DESCRIPTION OF THE PREFERRED EMBODIMENTS

Referring to Fig. 1, the electrical connector comprises a connector housing 1 for accommodating a plurality of terminals 2, a grommet mat seal 3 for sealing between the conductors 4 and the terminals 2, a back plate 5 for keeping the mat seal 3 within the connector housing 1 and guiding the conductors 4, a peripheral seal 6 around the connector housing, a TPA member 7 for locking the terminals in the connector housing (TPA = terminal position assurance), a hood 8 for covering the conductors that enter the connector housing, and a lever 9 for drawing a mating connector of which the socket housing 10 is shown against the electrical connector with the peripheral seal 6 pressed together. One of the cavity formations for accommodating the terminals 2 is shown at 20.

Fig. 2 is an oblique view from above onto the connector housing 1 which has outer lateral walls 11 and 12 enclosing an extended cavity 13. The housing cavity 13 has an upper ground level 14 on both sides adjacent to the walls 12, and a lower ground level 15 in the central region of the connector housing. Thus, the housing cavity 13 includes an upper, larger section 13a and a lower, smaller section 13b in the central region of the connector housing 1. Section 13b takes up the mat seal 3, and section 13a takes up the backplate 5. The housing sidewalls 11 each have a pair of lateral openings 16 communicating with the upper cavity ground level 14 and forming outlets from the cavity 13. A shroud 17 surrounds the connector housing 1 with a little distance thereto and may be shaped to cover the outlets from the opening 16 to form a protection against sprinkle water.

Adjacent to the sidewalls 12 and to cavity section 13b and starting from the upper ground level 14, each a pair of separate housing cavities in the form of big passages 18 are provided in the body of the connector housing. The space of the cavity 13 b and of the passages 18 is dedicated to sealing means that include the mat seal 3 and individual seals 38 (Fig. 1). Similarly, in the central region of the connector housing and starting from the lower ground level 15, four rows of smaller passages 19 are provided.

The mat seal 3 is shown in Fig. 3 having a basis shape of a right parallelepiped with rounded edges conforming to the lower cavity section 13b below the upper ground level 14. The mat seal 3 has four rows of smaller passages 39 registering to the passages 19 in the connector housing. The shape of the smaller passages 39 is accommodated to the size of the conductors leading into the electrical connector so as to seal these conductors. The electrical

connector may comprise conductors of different size, when the passages 39 may adopt different sizes, as shown. It is self-evident that the number of the rows of passages and the number of passages in each row can be chosen according to the respective needs. In such a case, the arrangement of the passages 19 in the connector housing 1 and the passages 59 in the back plate 5 will be adapted to the respective number and sizes of the conductors 4.

Fig. 4 shows a back plate 5 having a basis shape of a right parallelepiped with rounded edges. Registering to the large passages 18 in the connector housing are corner passages 58 in the body of the back plate 5 near the corners thereof. The corner passages 58 are smaller in seize than the passages 18 so that the passage walls 58 may guide the conductors 4 into the housing to the terminals 2. The back plate 5 has a central region with four rows of smaller passages 59 that register to the smaller passages 39 in the mat seal 3 and the smaller passages 19 in the connector housing 1. The back plate 5 has a pair of longer lateral sidewalls 51 and shorter sidewalls 52 that are shaped to fit within the upper cavity section 13a above the upper ground level 14. The lateral sides 51 of the back plate 5 are provided with lugs 56 that can be locked into the lateral openings 16 of the connector housing by snap action. Four lugs 56 are provided to fix the back plate 5 firmly in the cavity 13. Each lug has a triangle-shaped cross section with an inclined lower surface and a horizontal upper surface that slide into the slot-like opening 16 and lock therein. The openings 16 are not completely filled by the lugs 56, but narrow gaps are left for the water escaping. The back plate 5 at its lower surface has low feet or thin ribs 53 to create a narrow gap 54 between the lower surface of the back plate 5 and the upper surface of the mat seal 3 and of the individual seals 38. Appropriate ribs 53 can also be provided on the upper surface of the mat seal 3. The feet or ribs 53 are provided at the corners and at the middle of the lateral sides 51 of the central portion of the back plate 5.

Fig. 5 is another view onto the connector housing 1. To be seen are trunnions 91 for journalling the lever 9 on the connector housing. It is also to be seen that the upper ground level 14 leads the water flow into a respective lateral opening 16.

Fig. 6 shows the electrical connector with the hood 8 removed and without conductors. In relation to the embodiment of Fig. 1, a larger shroud 17 is used which also covers the outlets of the lateral openings 16. In Fig. 6, the mat seal 3 and the back plate 5 have been mounted in the cavity 13 of the connector housing 1.

Returning to Fig. 1, the conductor 4 is shown to be sealed off with an individual seal 38 placed in the separate passage 18 of the connector housing. Each passage 18 has its individual seal 38 for protecting the respective terminal 2 against ingressing water.

Not shown are the plurality of conductors terminated in the electrical connector. Due to the separate passages 58 in the back plate 5, each conductor 4 of larger size can be guided in appropriate manner to its terminal 2 in that the shape of the passage 58 can be adapted to decrease the freedom of movement of the conductor 4. Furthermore, the conductor is allowed to make a gentle bent while being guided also along the inner roof surface of the hood 8. To that end, inner projections 84 are provided in the hood 8.

When the electrical connector is in use in a vehicle, it may happen that spray water enters into the space below the hood 8 and gets into the upper portion of the cavity 13 through the back plate passages 58, 59. Normally, the mat seal 3 and the individual seals 38 form a barrier for the water to not ingress to the terminals 2. However, seals becoming older loose elasticity and eventually leak. If columns of water have accumulated above the seals, plenty of water may reach the terminals and lead to a short circuit. With invention however, the design is such that water cannot accumulate above the seals. With the narrow gap 54 between the back plate 5 and the mat seal 3 and with the lateral openings 16 in the connector housing 1, a drain passage is created for water having reached the upper surface of the seals 3 and 38. The shaking movement of the vehicle, wherein the electrical connector is normally built in, is helpful to remove the water that may have entered into the electrical connector above the seals 3, 38.

Modifications of the electrical connector can be made without departing from the scope of the claims. For example, the narrow gap 54 between back plate and mat seal can be created with other means than feet or ribs. Likewise it is not necessary to use lock openings for draining the water outwardly; also separate draining openings could be used.

CLAIMS

We claim:

1. An electrical connector comprising

a plurality of terminals connected to conductors,

a connector housing having cavities with a plurality of cavity formations for fixing the terminals,

sealing means including a mat seal for sealing around the conductors to the terminals and protecting the housing cavities from above, the mat seal having an upper surface with passages, each for sealing a respective conductor,

a back plate forming passages for the conductors,

a peripheral seal around the connector housing for sealing to a mating connector and protecting the terminals from below,

a TPA member for locking the terminals in the connector housing,

a hood for leading-in the conductors and for covering the connector housing from above, and

a lever for shutting the arrangement of the connector and of a mating complementary connector,

the connector housing having an extended housing cavity that accommodates the mat seal and the back plate,

characterized in that

a drain passage is created between the upper surface of the sealing means and the outside of the connector housing for letting escape water that may have ingressed into the extended housing cavity of the connector housing.

2. The electrical connector of claim 1 wherein the sealing means comprise the mat seal and a number of individual seals that are accommodated in separate housing passages adjacent to, but separate from the extended housing cavity, the drain passage connecting the individual seal upper sides with the connector housing outside.

3. The electrical connector of claim 2 wherein the back plate has corner passages registering to the separate housing passages, the corner passages having narrowed diameters relative to the respective diameters of the separate housing passages.

4. The electrical connector of claim 2 wherein the extended housing cavity has an upper, larger section for accommodating the back plate and a lower, smaller section for accommodating the mat seal.

5. The electrical connector of claim 1 wherein the drain passage extends between under side portions of the back plate on one hand and upper side portions formed by a level surface of the housing cavity and the upper surfaces of the sealing means on the other hand.

6. The electrical connector of claim 1 wherein the back plate has a basic shape of a right parallelepiped with corner passages near the corner edges and smaller passages in the central sector, and has lugs on lateral sides of the parallelepiped,

the mat seal has a basic shape of a right parallelepiped conforming to the central sector of the back plate and has smaller passages registering to the smaller passages of the back plate;

the housing cavity has two ground levels, an upper ground level for supporting the back plate and a lower ground level for supporting the mat seal,

the housing sidewalls have lateral openings communicating with the upper cavity ground level and cooperating with the back plate lugs to hold the back plate on place, and

the upper cavity ground level includes separate housing passages registering to the corner passages of the back plate and receiving each an individual seal for sealing a respective conductor of bigger cross section.

7. The electrical connector of claim 1 wherein one of the back plate or the mat seal has supporting ribs to create a narrow gap between back plate and mat seal, the narrow gap communicating the upper cavity ground level and the upper surfaces of the mat seal and of the individual seals with the lateral openings in the housing sidewalls.

8. The electrical connector of claim 6 wherein the supporting ribs are provided at four corners and at the middle of the lateral sides of the central sector of the back plate.

9. The electrical connector according to claim 6 wherein the lateral openings in the housing sidewall are arranged above the peripheral seal, and together with this seal, are covered by a shroud extending around the connector housing.

10. The electrical connector according to claim 6 wherein the hood, in its interior, has leading surfaces for supporting the conductors that make a bend at the upper cavity ground level from horizontal to vertical into a respective one of the passages of the back plate and of the connector housing.

11. The electrical connector according to claim 6 wherein the back plate, in its central section, has four rows of smaller passages.

12. The electrical connector of claim 11 wherein the smaller passages are differently small among rows or within rows.

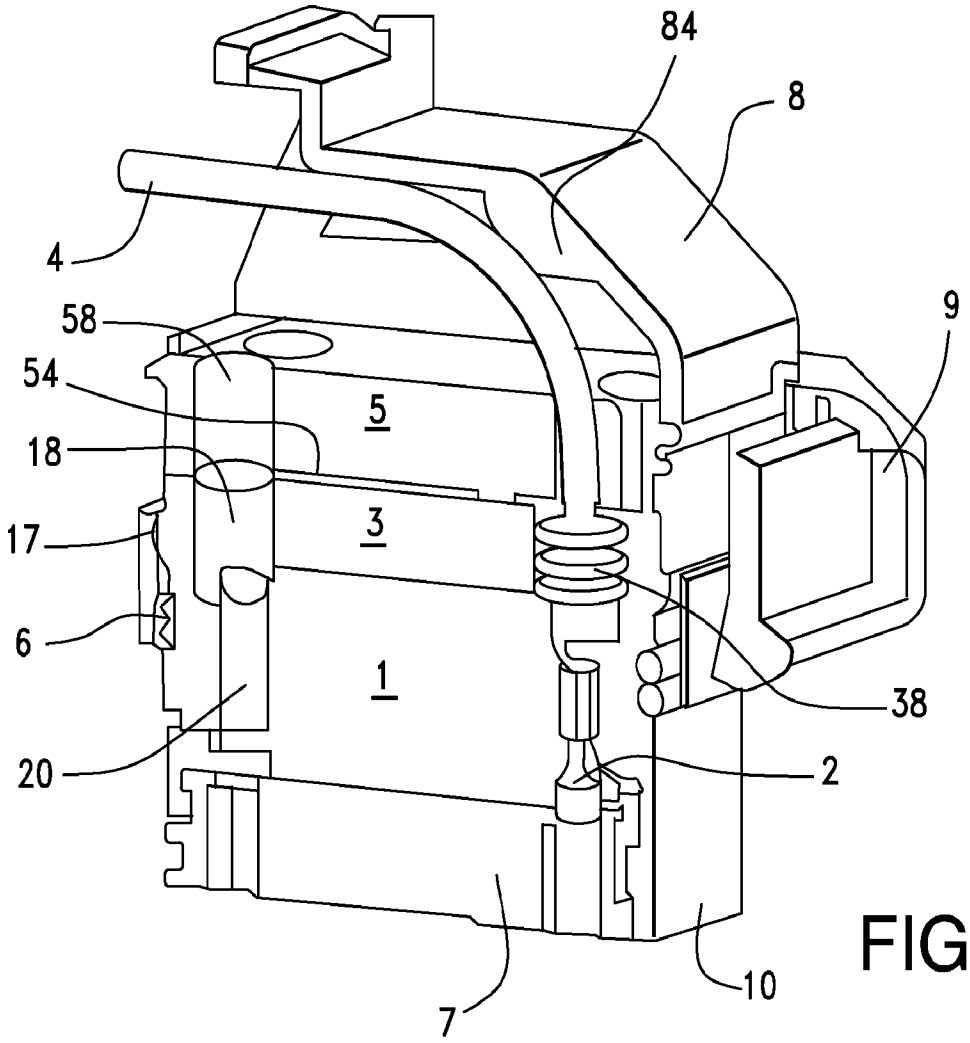

FIG.1

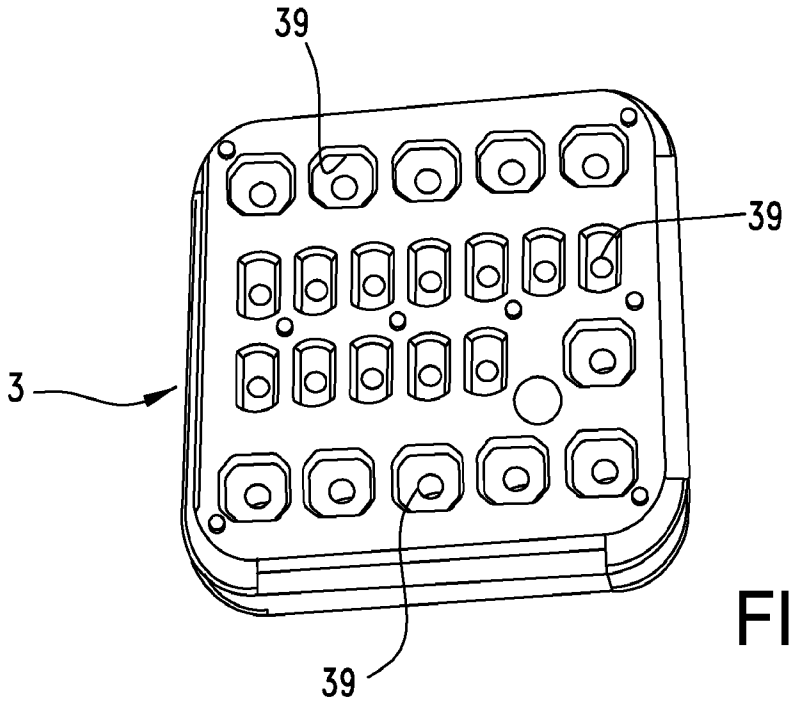

FIG.3

FIG.2

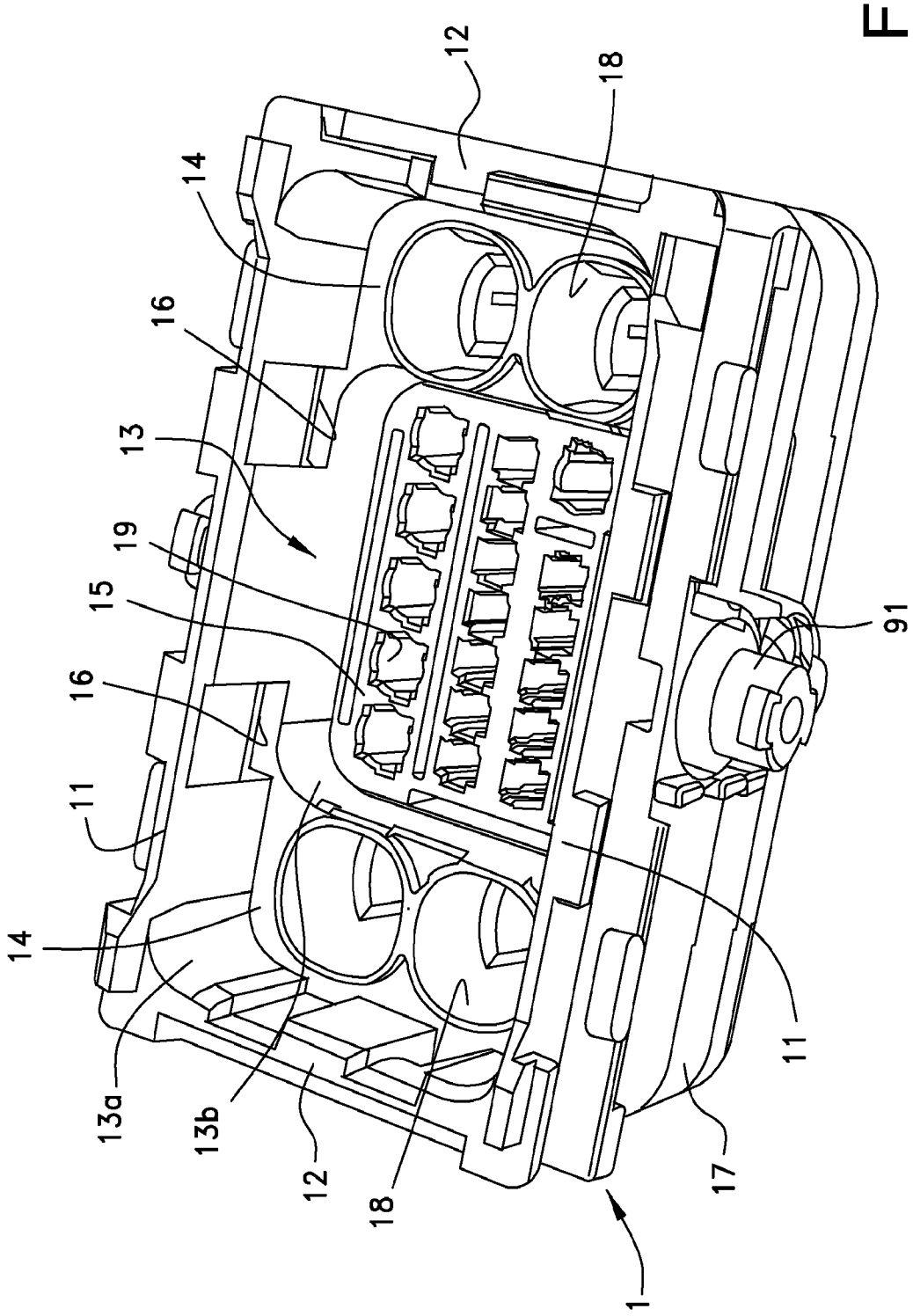

FIG.4

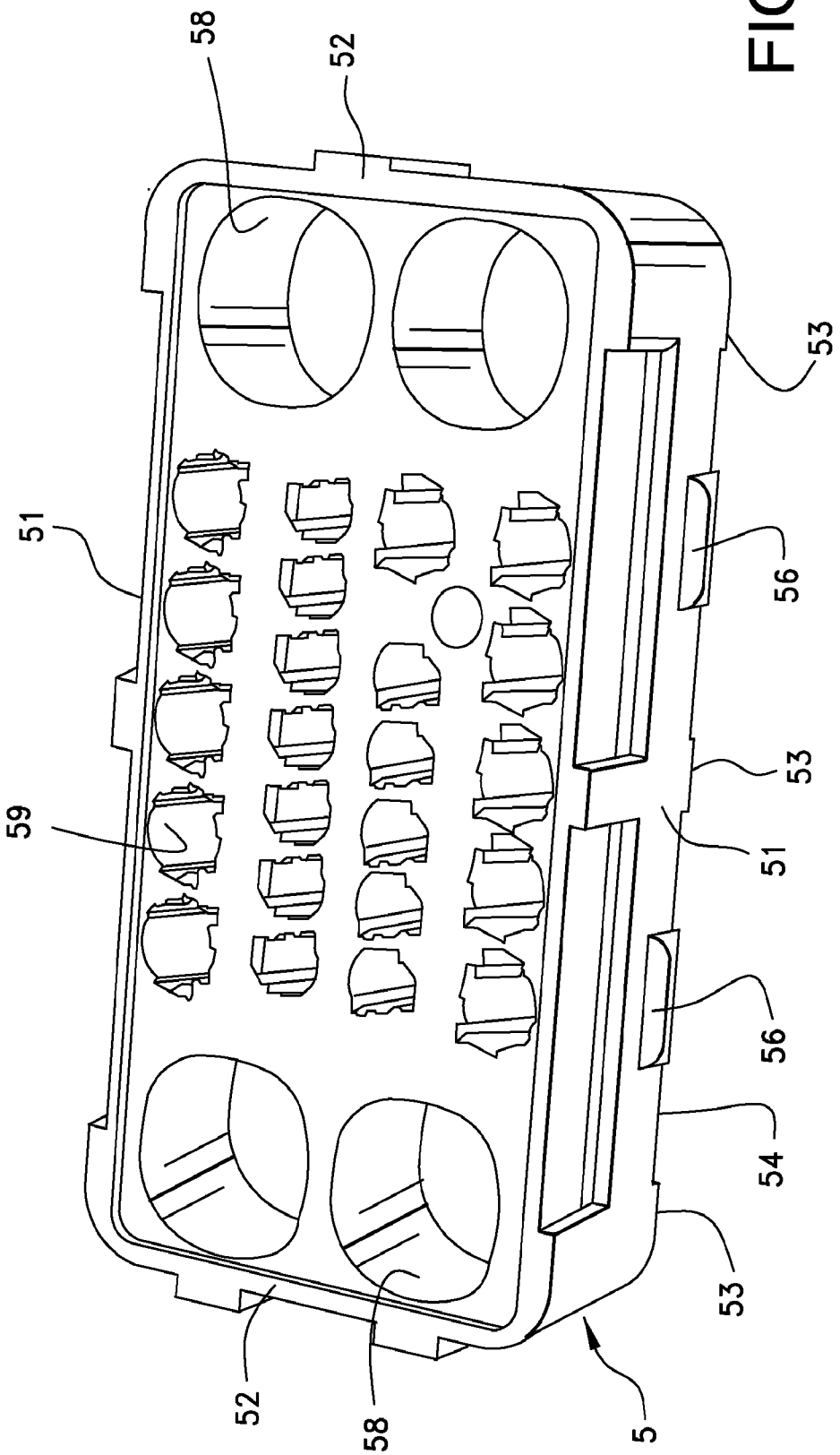

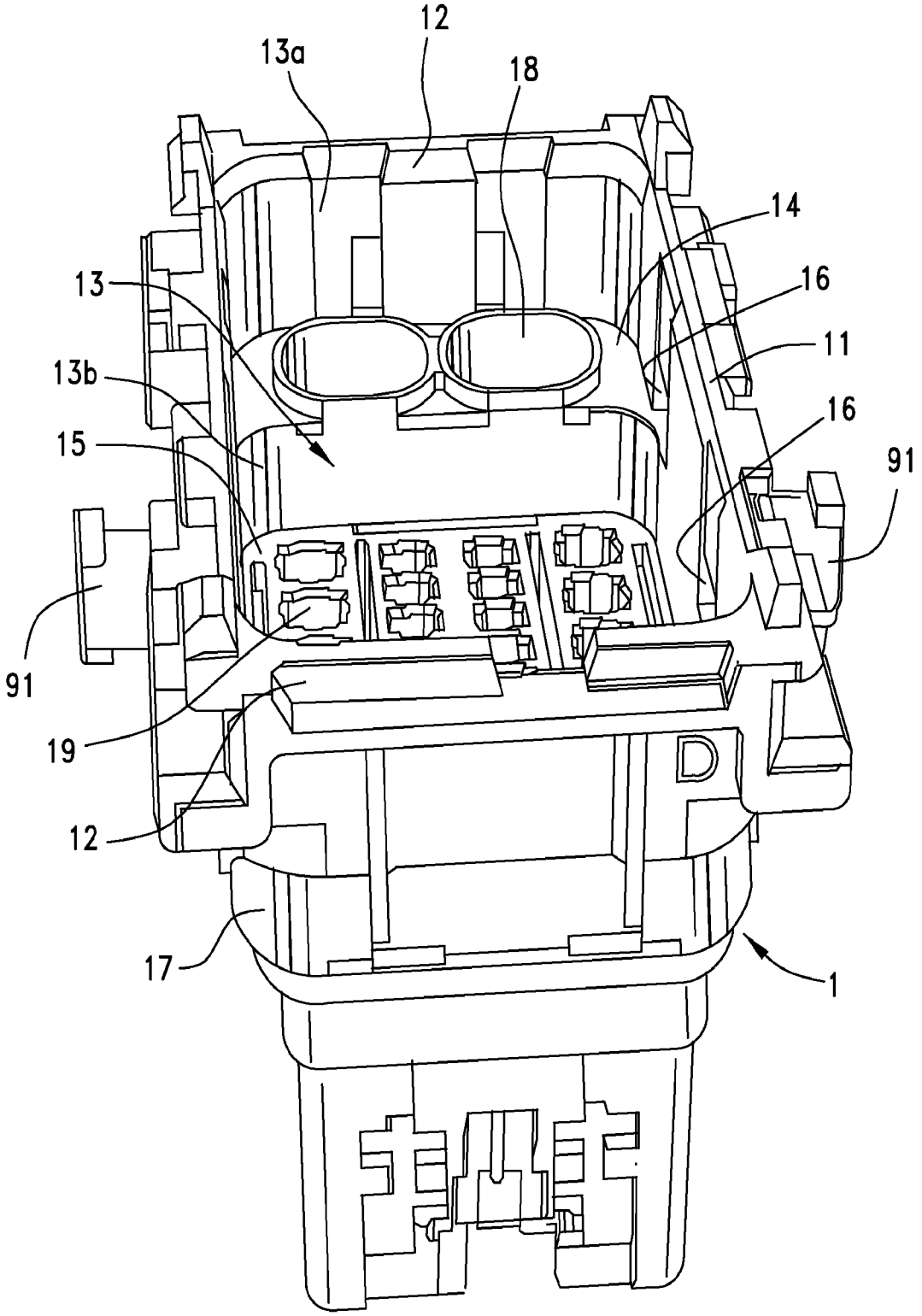

FIG.5

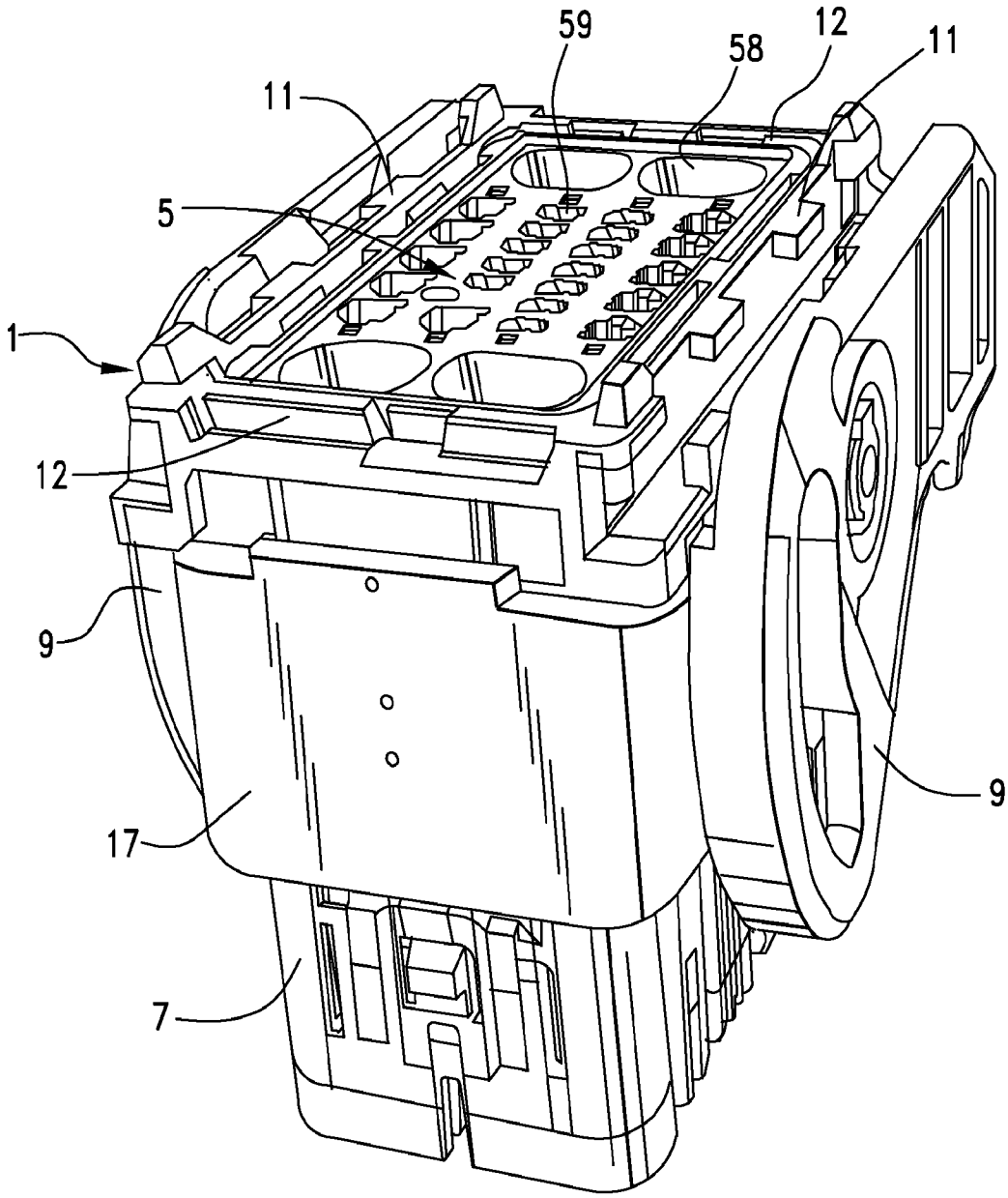

FIG.6

INTERNATIONAL SEARCH REPORT

International application No
PCT/US2010/034845

A. CLASSIFICATION OF SUBJECT MATTER
INV. H01R13/52
ADD.

According to International Patent Classification (IPC) or to both national classification and IPC

B. FIELDS SEARCHED

Minimum documentation searched (classification system followed by classification symbols)
H01R

Documentation searched other than minimum documentation to the extent that such documents are included in the fields searched

Electronic data base consulted during the international search (name of data base and, where practical, search terms used)
EPO-Internal, PAJ

C. DOCUMENTS CONSIDERED TO BE RELEVANT

Category*	Citation of document, with indication, where appropriate, of the relevant passages	Relevant to claim No.
X	US 6 203 362 B1 (TSUJI TAKESHI [JP]) 20 March 2001 (2001-03-20) column 3, line 24 - column 4, line 64; figures 1,2 column 6, line 11 - column 7, line 38 column 1, lines 9-56; figures 11,12	1-12
Y	US 6 217 394 B1 (SUGIE NAOTO [JP]) 17 April 2001 (2001-04-17) column 3, line 50 - column 4, line 45; figures 1-3	1-12

-/--

[X] Further documents are listed in the continuation of Box C.

[X] See patent family annex.

* Special categories of cited documents :

"A" document defining the general state of the art which is not considered to be of particular relevance

"E" earlier document but published on or after the international filing date

"L" document which may throw doubts on priority claim(s) or which is cited to establish the publication date of another citation or other special reason (as specified)

"O" document referring to an oral disclosure, use, exhibition or other means

"P" document published prior to the international filing date but later than the priority date claimed

"T" later document published after the international filing date or priority date and not in conflict with the application but cited to understand the principle or theory underlying the invention

"X" document of particular relevance; the claimed invention cannot be considered novel or cannot be considered to involve an inventive step when the document is taken alone

"Y" document of particular relevance; the claimed invention cannot be considered to involve an inventive step when the document is combined with one or more other such documents, such combination being obvious to a person skilled in the art.

"&" document member of the same patent family

Date of the actual completion of the international search	Date of mailing of the international search report
13 August 2010	20/08/2010

Name and mailing address of the ISA/	Authorized officer
European Patent Office, P.B. 5818 Patentlaan 2 NL – 2280 HV Rijswijk Tel. (+31–70) 340–2040, Fax: (+31–70) 340–3016	Warneck, Nicolas

INTERNATIONAL SEARCH REPORT

International application No
PCT/US2010/034845

C(Continuation). DOCUMENTS CONSIDERED TO BE RELEVANT

Category*	Citation of document, with indication, where appropriate, of the relevant passages	Relevant to claim No.
Y	JP 4 351865 A (SUMITOMO WIRING SYSTEMS) 7 December 1992 (1992-12-07) "An automated computer translation of this Japanese publication can be found on the website of the Japan Patent Office: http://dossier1.ipdl.inpit.go.jp/AIPN/aipn_call_transl.ipdl?N0000=7413&N0120=01&N2001=5&N3001=2616604"; * abstract	1-12
A	US 5 769 648 A (HAYASHI HIROYUKI [JP]) 23 June 1998 (1998-06-23) column 1, line 51 - column 2, line 36 column 3, line 44 - column 5, line 50; figures 1-3	1-12
A	US 2008/299799 A1 (YOSHIDA MASAOKI [JP] ET AL) 4 December 2008 (2008-12-04) paragraph [0049] - paragraph [0053]; figures 2,3,5	1-12
A	GB 2 279 510 A (SUMITOMO WALL SYSTEMS LTD [JP] SUMITOMO WIRING SYSTEMS [JP]) 4 January 1995 (1995-01-04) * abstract	1-12

INTERNATIONAL SEARCH REPORT

Information on patent family members

International application No
PCT/US2010/034845

Patent document cited in search report	Publication date	Patent family member(s)	Publication date
US 6203362 B1	20-03-2001	NONE	
US 6217394 B1	17-04-2001	DE 10000971 A1	27-07-2000
		JP 2000208200 A	28-07-2000
JP 4351865 A	07-12-1992	JP 2616604 B2	04-06-1997
US 5769648 A	23-06-1998	NONE	
US 2008299799 A1	04-12-2008	CN 101316031 A	03-12-2008
		JP 2008295263 A	04-12-2008
GB 2279510 A	04-01-1995	JP 2567950 Y2	08-04-1998
		JP 7005274 U	24-01-1995
		US 5515988 A	14-05-1996