(12) UK Patent (19) GB (11) 2 281 102 (13) B

(54) Title of Invention

Ventilator motor support framework

(51) INT CL[6]; F04D 29/64

(21) Application No
9415241.0

(22) Date of filing
28.07.1994

(30) Priority Data

(31) 05190027

(32) 30.07.1993

(33) JP

(43) Application published
22.02.1995

(45) Patent published
09.08.1995

(52) Domestic classification
(Edition N)
F1C CFGB C103 C601
H2A AKL2 AK117 AK121
AK807

(56) Documents cited
GB2149013 A
WO93/05297 A1

(58) Field of search

As for published application
2281102 A *viz:*
UK CL(Edition M) F1C CFGB
CFJ
INT CL[5] F04D 25/12 29/64,
H02K 5/04 5/06
On-line databases : WPI
updated as appropriate

Additional Fields
UK CL(Edition N) H2A AKLL
AKL2

(72) Inventor(s)
Masatsugu Otobe

(73) Proprietor(s)
Matsushita Seiko Co., Ltd.

(Incorporated in Japan)

2-61 Imafuku Nishi 6-chome
Joto-ku
Osaka
Japan

(74) Agent and/or
Address for Service
Gill Jennings & Every
Broadgate House
7 Eldon Street
London
EC2M 7LH
United Kingdom

228,102

Fig. 1

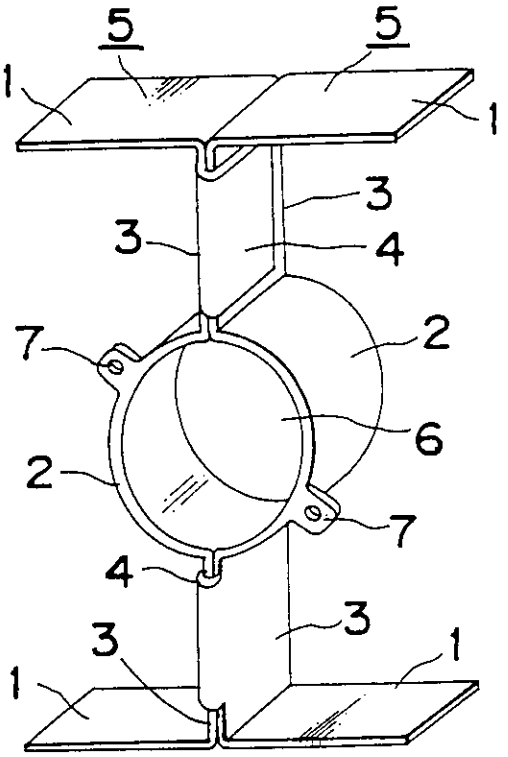

Fig. 2

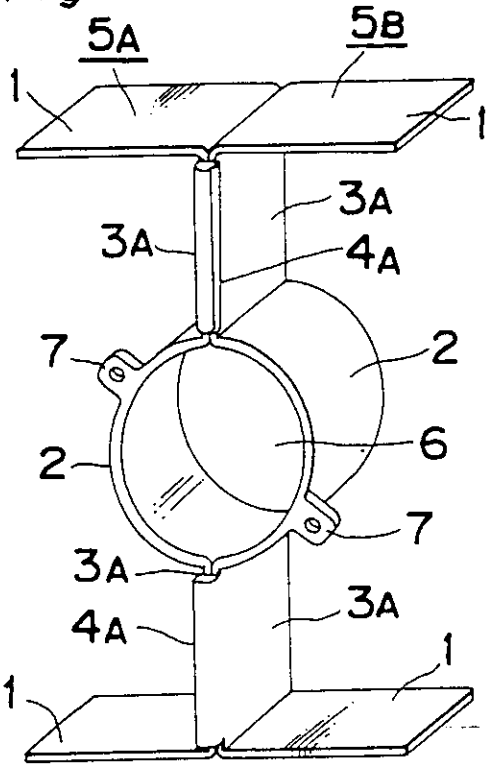

Fig. 3

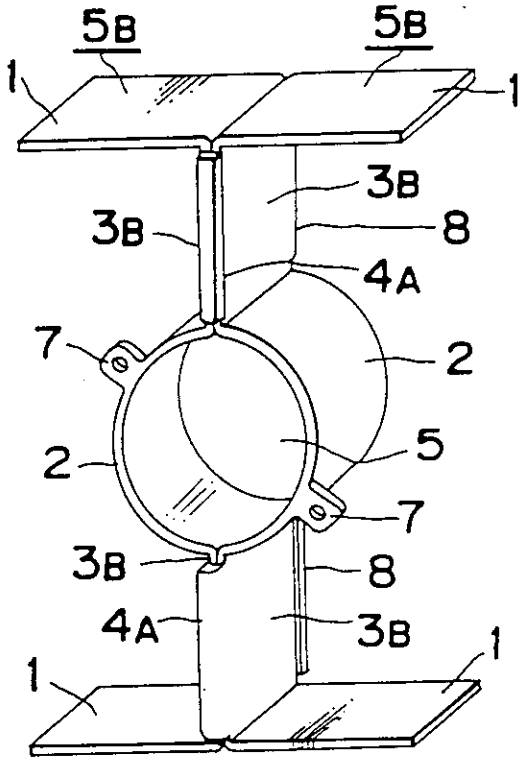

Fig. 4

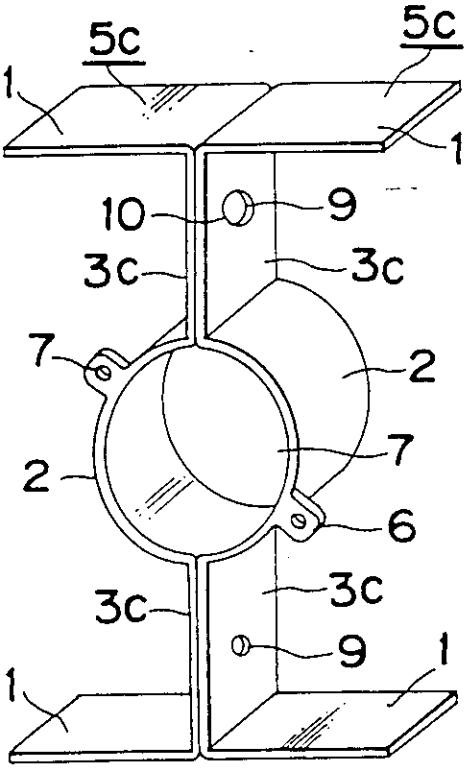

Fig.5

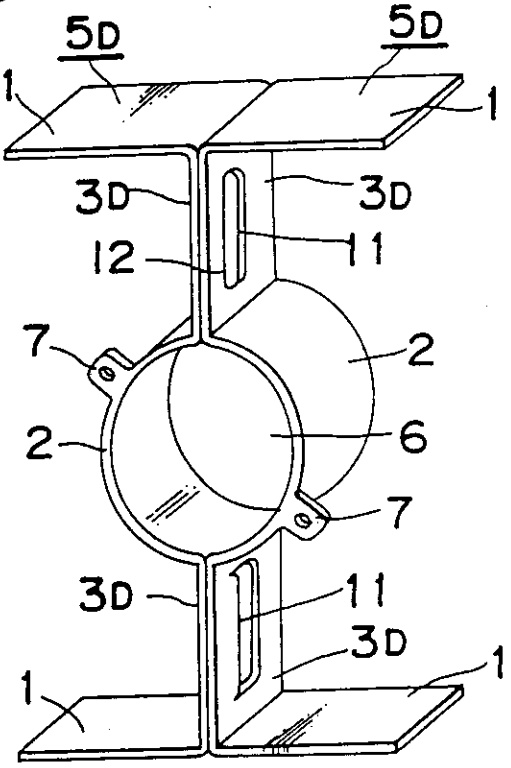

Fig.6

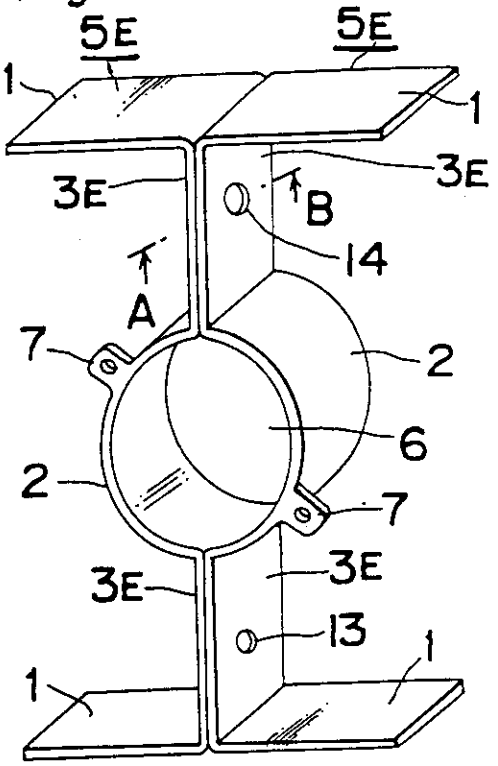

Fig.7

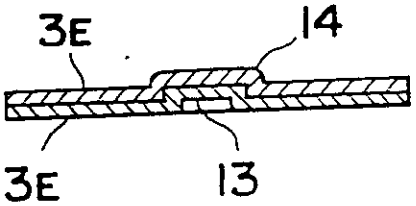

Fig.8

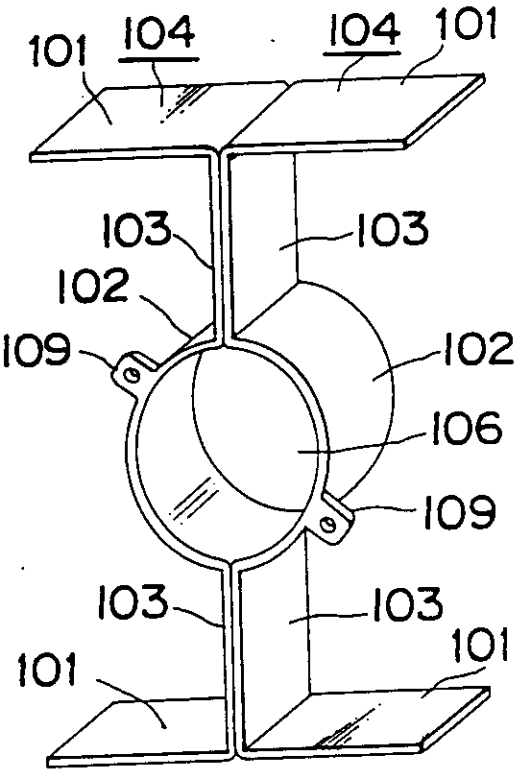

Fig. 9

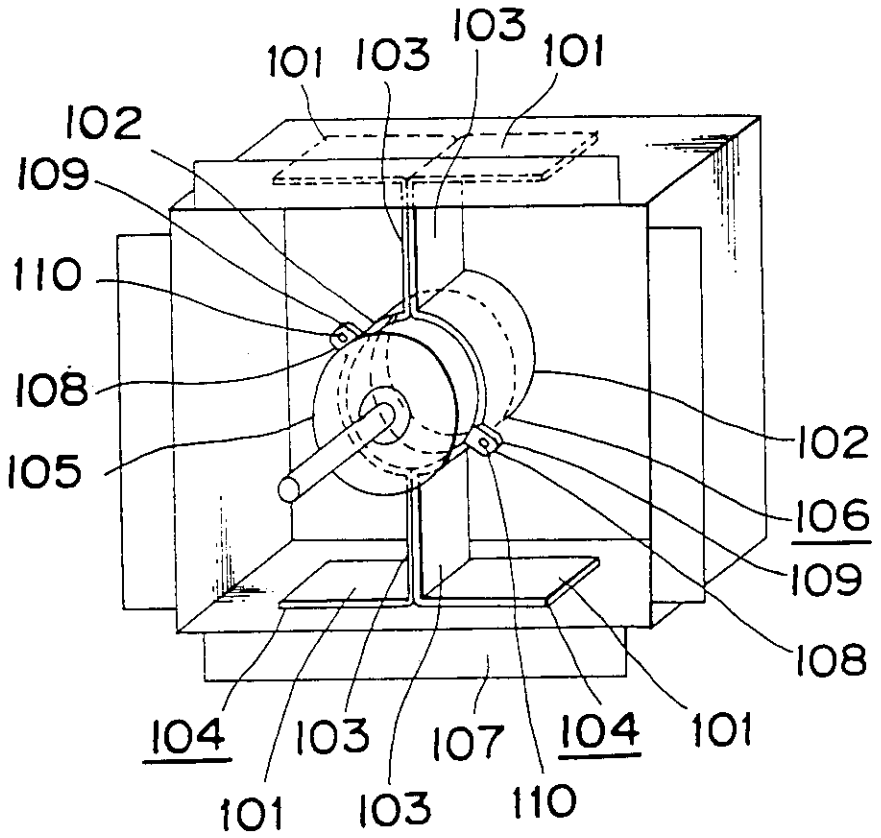
101
103
103
101
102
109
110
108
105
102
106
109
108
104
103
107
104
101
101
103
110

VENTILATOR MOTOR SUPPORT FRAMEWORK

The present invention generally relates to a ventilator fan assembly and, more particularly, to a motor support framework for the support of a fan drive motor.

A ventilator fan assembly has long been used which comprises an open-ended housing of, for example, a square cross-section having a ventilating port extending completely from one end to the opposite end, an electric drive motor having a drive shaft on which a ventilating fan is mounted for rotation together therewith, and four independent support arms extending inwardly from the wall defining the housing with their inner end secured to the drive motor to support the latter in a concentric relation with the housing. In this type of ventilator fan assembly, since a stream of air to be ventilated flow through the housing while impinging upon the support arms, not only does dust in the stream of air pile up on the support frames, but also the presence of the support arms within the ventilating port constitute a resistance to the flow of air being ventilated.

To reduce the number of the support arms to thereby facilitate a routine cleaning of the ventilator fan assembly and, also, reduce the flow resistance, a ventilator fan assembly of a structure shown in Figs. 8 and 9 has been suggested and will now be discussed.

As shown in Figs. 8 and 9, the ventilator fan assembly a generally square-sectioned, open-ended housing 107 having a ventilating port defined therein so as to extend completely from

one end to the opposite end, This ventilator fan assembly makes use of a motor support framework including first and second support strips 104 of a substantially identical construction. Each of the first and second support strips 104 has its opposite end portions transversely bent to define respective fixtures 101 and an intermediate portion recessed, or otherwise curved, to define a generally semicircular motor clamp 102, while a portion of the first or second support strip 104 between each fixture 101 and the motor clamp 102 defines a support leg 103. Each of the first and second support strips 104 also has at least one lug 109 formed integrally with the respective motor clamp 102 for engagement with an associated lug 108 that is integral with a casing of the drive motor 105.

The first and second support strips 104 are welded together by the use of a spot-welding technique to complete the motor support framework. In the assembled condition of the motor support framework, the fixtures 101 of the respective support strips 104 protrude outwardly from each other while the motor clamps 102 of the respective support strips 104 cooperate with each other to define a generally cylindrical motor hold 106 for accommodating therein an electric drive motor 105. The motor support framework is installed within the housing 107 with the upper and lower fixtures 101 rivetted, or otherwise rigidly secured in any suitable manner, to upper and lower panels of the housing 107 so that the cylindrical motor hold 106 assumes a concentric relation with the housing.

Before or after the motor support framework is installed within the housing 107 in the manner described above, the

drive motor 105 is inserted within the motor hold 106 with the lugs 108 fastened together with the respective lugs 109 by means of screw members 110

In view of the necessity for the two support strips to support fixedly the drive motor 105 which has a substantial weight, the support legs 103 of the respective support strips 104 must be spot-welded together to secure a sufficient strength required for the motor support framework to support the drive motor 105. This involves a problem in that, since the use is required of a spot-welding machine and its related extensive equipments at the site of production of ventilator fan assemblies and, also, since a post-welding process associated with spot-weld deposits must be exercised, the manufacturing cost tends to increase.

Accordingly, the present invention has been devised to substantially eliminate the above discussed problems and is intended to provide an improved motor support framework for a ventilator fan assembly, which does not require the use of any welding technique, but which has an increased strength and is effective to reduce the manufacturing cost.

Another important object of the present invention is to provide an improved motor support framework of the type referred to above, which is easy to assembly.

For accomplishing the first mentioned object of the present invention, in accordance with one aspect of the present invention there is provided a motor support framework for a ventilator fan assembly which comprises a first support strip having opposite ends bent at right angles to protrude in a first

direction to define respective fixtures adapted to be secured to opposite side faces of a ventilator housing, a generally intermediate portion of said first support strip being recessed in said first direction to define a generally semicircular motor clamp while leaving flat legs on respective sides of the motor clamp in the first support strip; a second support strip having opposite ends bent at right angles to protrude in a second direction counter to the first direction to define respective fixtures adapted to be secured to the opposite side faces of the ventilator housing, a generally intermediate portion of said second support strip being recessed in said second direction to define a generally semicircular motor clamp while leaving flat legs on respective sides of the motor clamp in the second support strip; a first tab formed integrally with one of the flat legs of the first support strip so as to protrude laterally outwardly therefrom in a third direction; and a second tab formed integrally with one of the flat legs of the second support strip so as to protrude laterally outwardly therefrom in a fourth direction counter to said third direction, whereby when the first and second support strips are mated together with the flat legs of the first support strip held in contact with the flat legs of the second support strip to complete the motor support framework, said first tab is crimped inwardly to firmly sandwich the other of the flat legs of the second support strip between it and said one of the flat legs of the first support strip while said second tab is crimped inwardly to firmly sandwich the other of the flat legs of the first support strip between it and said one of the flat legs of the second support strip.

In order to accomplish the second mentioned object of the present invention, in accordance with another aspect of the present invention there is provided a motor support framework for a ventilator fan assembly which comprises a first support strip having opposite ends bent at right angles to protrude in a first direction to define respective fixtures adapted to be secured to opposite side faces of a ventilator housing, a generally intermediate portion of said first support strip being recessed in said first direction to define a generally semicircular motor clamp while leaving flat legs on respective sides of the motor clamp in the first support strip; a second support strip having opposite ends bent at right angles to protrude in a second direction counter to the first direction to define respective fixtures adapted to be secured to the opposite side faces of the ventilator housing, a generally intermediate portion of said second support strip being recessed in said second direction to define a generally semicircular motor clamp while leaving flat legs on respective sides of the motor clamp in the second support strip; a first side stop formed integrally with one of the flat legs of the first support strip and bent in a third direction so as to lie perpendicular to such one of the flat legs of the first support strip; and a second side stop formed integrally with one of the flat legs of the second support strip and bent in a fourth direction, counter to said third direction so as to lie perpendicular to such one of the flat legs of the second support strip, whereby when the first and second support strips are mated together with the flat legs of the first support strip held in contact with the flat legs of the second support strip to com-

plete the motor support framework, said first and second side stops prevent any angular displacement of one of the first and second support strips relative to the other of the first and second support strips.

In order to accomplish the second mentioned object of the present invention, in accordance with a further aspect of the present invention there is provided a motor support framework for a ventilator fan assembly which comprises a first support strip having opposite ends bent at right angles to protrude in a first direction to define respective fixtures adapted to be secured to opposite side faces of a ventilator housing, a generally intermediate portion of said first support strip being recessed in said first direction to define a generally semicircular motor clamp while leaving flat legs on respective sides of the motor clamp in the first support strip; a second support strip having opposite ends bent at right angles to protrude in a second direction counter to the first direction to define respective fixtures adapted to be secured to the opposite side faces of the ventilator housing, a generally intermediate portion of said second support strip being recessed in said second direction to define a generally semicircular motor clamp while leaving flat legs on respective sides of the motor clamp in the second support strip; first upper and lower side stops formed integrally with the respective flat legs of the first support strip and bent in a third direction so as to lie perpendicular to such one of the flat legs of the first support strip, said first upper and lower side stops being positioned in an offset relation with each other with respect to the lengthwise direction of the first support

strip; and second upper and lower side stops formed integrally with the respective flat legs of the second support strip and bent in a fourth direction, counter to said third direction so as to lie perpendicular to such one of the flat legs of the second support strip, said second upper and lower side stops being positioned in an offset relation with each other with respect to the lengthwise direction of the second support strip, whereby when the first and second support strips are mated together with the flat legs of the first support strip held in contact with the flat legs of the second support strip to complete the motor support framework, said first and second upper and lower side stops prevent any angular displacement of one of the first and second support strips relative to the other of the first and second support strips.

In order to accomplish the second mentioned object of the present invention, in accordance with a still further aspect of the present invention there is provided a motor support framework for a ventilator fan assembly which comprises: a first support strip having opposite ends bent at right angles to protrude in a first direction to define respective fixtures adapted to be secured to opposite side faces of a ventilator housing, a generally intermediate portion of said first support strip being recessed in said first direction to define a generally semicircular motor clamp while leaving flat legs on respective sides of the motor clamp in the first support strip, said flat legs of the first support strip having a round projection and a round hole defined therein, respectively; and a second support strip having opposite ends bent at right angles to protrude in a second

direction counter to the first direction to define respective fixtures adapted to be secured to the opposite side faces of the ventilator housing, a generally intermediate portion of said second support strip being recessed in said second direction to define a generally semicircular motor clamp while leaving flat legs on respective sides of the motor clamp in the second support strip, said flat legs of the second support strip having a round hole and a round projection defined therein, respectively; whereby when the first and second support strips are mated together with the flat legs of the first support strip held in contact with the flat legs of the second support strip to complete the motor support framework, the round projections in the respective flat legs of the first and second support strips are received in the round holes in the respective flat legs of the first and second support strips to thereby avoid any angular displacement of one of the first and second support strips relative to the other of the first and second support strips.

In order to accomplish the second mentioned object of the present invention, in accordance with a yet further aspect of the present invention there is provided a motor support framework for a ventilator fan assembly which comprises a first support strip having opposite ends bent at right angles to protrude in a first direction to define respective fixtures adapted to be secured to opposite side faces of a ventilator housing, a generally intermediate portion of said first support strip being recessed in said first direction to define a generally semicircular motor clamp while leaving flat legs on respective sides of the motor clamp in the first support strip, said flat legs of the first

support strip having a generally elongated projection and a correspondingly elongated slot defined therein, respectively; and a second support strip having opposite ends bent at right angles to protrude in a second direction counter to the first direction to define respective fixtures adapted to be secured to the opposite side faces of the ventilator housing, a generally intermediate portion of said second support strip being recessed in said second direction to define a generally semicircular motor clamp while leaving flat legs on respective sides of the motor clamp in the second support strip, said flat legs of the second support strip having an elongated slot and a correspondingly elongated projection defined therein, respectively, whereby when the first and second support strips are mated together with the flat legs of the first support strip held in contact with the flat legs of the second support strip to complete the motor support framework, the elongated projections in the respective flat legs of the first and second support strips are received in the corresponding slots in the respective flat legs of the first and second support strips to thereby avoid any angular displacement of one of the first and second support strips relative to the other of the first and second support strips.

In order to accomplish the second mentioned object of the present invention, in accordance with a still yet further aspect of the present invention there is provided a motor support framework for a ventilator fan assembly which comprises a first support strip having opposite ends bent at right angles to protrude in a first direction to define respective fixtures adapted to be secured to opposite side faces of a ventilator housing, a

generally intermediate portion of said first support strip being recessed in said first direction to define a generally semicircular motor clamp while leaving flat legs on respective sides of the motor clamp in the first support strip, said flat legs of the first support strip having a raised projection and a round recess defined therein, respectively; and a second support strip having opposite ends bent at right angles to protrude in a second direction counter to the first direction to define respective fixtures adapted to be secured to the opposite side faces of the ventilator housing, a generally intermediate portion of said second support strip being recessed in said second direction to define a generally semicircular motor clamp while leaving flat legs on respective sides of the motor clamp in the second support strip, said flat legs of the second support strip having a round recess and a raised projection defined therein, respectively, whereby when the first and second support strips are mated together with the flat legs of the first support strip held in contact with the flat legs of the second support strip to complete the motor support framework, the raised projections in the respective flat legs of the first and second support strips are received in the round recesses in the respective flat legs of the first and second support strips to thereby avoid any angular displacement of one of the first and second support strips relative to the other of the first and second support strips.

This and other objects and features of the present invention will become clear from the following description taken in conjunction with preferred embodiments thereof with reference

to the accompanying drawings, in which like parts are designated by like reference numerals and in which:

Fig. 1 is a perspective view of a motor support framework according to a first embodiment of the present invention;

Fig. 2 is a perspective view of the motor support framework according to a second embodiment of the present invention;

Fig. 3 is a perspective view of the motor support framework according to a third embodiment of the present invention;

Fig. 4 is a perspective view of the motor support framework according to a fourth embodiment of the present invention;

Fig. 5 is a perspective view of the motor support framework according to a fifth embodiment of the present invention;

Fig. 6 is a perspective view of the motor support framework according to a sixth embodiment of the present invention;

Fig. 7 is a cross-sectional view, on an enlarged scale, taken along the line A-A in Fig. 6;

Fig. 8 is a perspective view of the prior art motor support framework; and

Fig. 9 is a perspective view of a ventilator assembly employing the prior art motor support framework shown in Fig. 8.

Before the description of the present invention proceeds, it is to be noted that Figs. 1 to 7 illustrate only a motor support framework according to different embodiments of the present invention. Other component parts which form a ventilator fan assembly when combined together with the motor support framework of the present invention may be identical with those shown in and described with reference to Figs. 8 and 9 and, therefore, they are not reiterated for the sake of brevity. It is also to be noted that the motor support framework of the present invention is installed in a ventilating port in a manner similar to that described with reference to Figs. 8 and 9.

Referring first to Fig. 1, the motor support framework shown therein comprises first and second support strips 5 of substantially identical construction. Each support strip 5 is in the form of a generally rectangular plate having its opposite ends bent at right angles to the remaining portion of the support strip 5 to define upper and lower fixtures 1 that protrude in the same direction. A generally or substantially intermediate portion of each support strip 5 is recessed, or otherwise curved in any suitable manner, in a direction conforming to the direction in which the associated fixtures 1 protrude, to thereby define a generally semicircular motor clamp 2. A portion of each support strip 5 between each fixture 1 and the motor clamp 2 defines an upper or lower flat leg 3. Each of the first and second support strips 5 also has at least one fitting lug 7 formed integrally with the respective motor clamp 2 for engagement with an associated lug 108 (Fig. 9) that is integral with a casing of the drive motor 105 as shown in Fig. 9.

The first support strip 5 has a first tab 4 integrally formed therewith so as to protrude laterally outwardly from a side edge of the upper flat leg 3 in a first direction while the second support strip 5 has a second tab 4 integrally formed therewith so as to protrude laterally outwardly from a side edge of the lower flat leg 3 in a second direction counter to the first direction.

To complete the motor support framework, the first and second support strips 5 are mated together with the upper and lower flat legs 3 of the first support strip 3 held in face-to-face relation with the upper and lower flat legs 3 of the second support strip 5, respectively. Thereafter, the first tab 4 integral with the first support strip 5 is crimped inwardly to firmly sandwich the upper flat leg 3 of the second support strip 5 between it and the upper flat leg 3 of the first support strip 5, and the second tab 4 integral with the second support strip 5 is crimped inwardly to firmly sandwich the lower flat leg 3 of the first support strip 5 between it and the lower flat leg 3 of the second support strip 5.

In the assembled condition of the motor support framework, the semicircular motor clamps 2 in the first and second support strips 3 mated together defines a generally cylindrical motor hold 6 for accommodating an electric drive motor (indicated by 105 in Fig. 9) with the lugs 108 fastened to the lugs 7.

According to the first embodiment of the present invention, the use of the first and second tabs 4 integral with the respective first and second support strips 5 is effective to increase the strength of the flat legs 3. In addition, when and

after the first and second tabs 4 are crimped inwardly to firmly sandwich the upper and lower flat legs 3 of the first and second support strips 5, respectively, in the manner described above, both of any possible displacement of one of the first and second support strips 3 in a direction lengthwise of the flat legs 3 and any possible separation of the first and second support strips 3 in a direction away from each other are advantageously avoided, resulting in an increase in strength of the motor support framework as a whole.

With the motor support framework of the structure described hereinbefore, even though no spot-welding is exercised such as hitherto required, the strength of the strength of the motor support framework can be increased. Hence, neither the spot-welding machine nor its related extensive equipments need be installed at the site of production of ventilator fan assemblies and, also, no post-welding process associated with spot-weld deposits need be exercised as well. Thus, according to the present invention, the manufacturing cost can advantageously be reduced considerably.

Fig. 2 illustrates a second embodiment of the present invention. The motor support framework shown in Fig. 2 is substantially similar to that shown in and described with reference to Fig. 1, except that, in place of the first and second tabs 4 shown in Fig. 1, first and second side stops 4A is employed in Fig. 2.

Referring to Fig. 2, the motor support framework shown therein comprises first and second support strips 5A of substantially identical construction. Each support strip 5A is in the

form of a generally rectangular plate having its opposite ends bent at right angles to the remaining portion of the support strip 5A to define upper and lower fixtures 1 that protrude in the same direction. A generally or substantially intermediate portion of each support strip 5A is recessed, or otherwise curved in any suitable manner, in a direction conforming to the direction in which the associated fixtures 1 protrude, to thereby define a generally semicircular motor clamp 2. A portion of each support strip 5A between each fixture 1 and the motor clamp 2 defines an upper or lower flat leg 3A. Each of the first and second support strips 5A also has at least one fitting lug 7 formed integrally with the respective motor clamp 2 for engagement with an associated lug 108 (Fig. 9) that is integral with a casing of the drive motor 105 as shown in Fig. 9.

The first support strip 5A has a first side stop 4A integrally formed therewith so as to protrude laterally outwardly from a side edge of the upper flat leg 3A in a first direction while the second support strip 5A has a second side stop 4A integrally formed therewith so as to protrude laterally outwardly from a side edge of the lower flat leg 3A in a second direction counter to the first direction. Each of the first and second side stops 4A are bent at right angles to the associated first and second flat legs 3A so that, when the first and second support strips 5A are mated together in a manner similar to that described in connection with the first and second support strips 5 shown in Fig. 1, the first and second side stops 4A are held in abutment with respective side edges of the second and first flat

legs 3A as shown in Fig. 2, thereby completing the motor support framework.

According to the second embodiment of the present invention shown in Fig. 2, the use of the first and second side stops 4A integral with the respective first and second support strips 5A is effective to increase the strength of the flat legs 3A. In addition, when the motor support framework is assembled by mating the first and second support strips 3A together with the first and second side stops 4A held in abutment with the respective side edges of the second and first flat legs 3A where no side stop is formed, not only can the strength of the motor support framework be increased, but also the first and second support strips 5A can readily be assembled together by a simple linear placement of one of the first and second support strips 5A towards the other of the first and second support strips 5A since the first and second side stops 4A lie perpendicular to the associated first and second flat legs 3A.

With the motor support framework of the structure according to the second embodiment of the present invention, even though no spot-welding is exercised such as hitherto required, not only can the strength of the motor support framework advantageously be increased, but also the motor support framework can easily be assembled.

With reference to Fig. 3 showing a third embodiment of the present invention, the motor support framework shown therein is substantially similar to that shown in Fig. 2, except for a difference which will now be described.

The motor support framework shown in Fig. 3 comprises first and second support strips 5B of substantially identical construction. Each support strip 5B is in the form of a generally rectangular plate having its opposite ends bent at right angles to the remaining portion of the support strip 5B to define upper and lower fixtures 1 that protrude in the same direction. An intermediate portion of each support strip 5B is recessed, or otherwise curved in any suitable manner, in a direction conforming to the direction in which the associated fixtures 1 protrude, to thereby define a generally semicircular motor clamp 2. A portion of each support strip 5B between each fixture 1 and the motor clamp 2 defines an upper or lower flat leg 3B. Each of the first and second support strips 5B also has at least one fitting lug 7 formed integrally with the respective motor clamp 2 for engagement with an associated lug 108 (Fig. 9) that is integral with a casing of the drive motor 105 as shown in Fig. 9.

The first support strip 5B has a first upper side stop 4A integrally formed with one of opposite side edges of the upper flat leg 3B thereof and bent right angles thereto so as to protrude in a first direction and, also, a first lower side stop 8 integrally formed with one of opposite side edges of the lower flat leg 3B of the first support strip 5B, which is offset relative to such one of the opposite side edge of the upper flat leg 3B of the first support strip 5B, and bent right angles thereto so as to protrude in the first direction. Similarly, the second support strip 5B has a second upper side stop 8 integrally formed with one of opposite side edges of the upper flat leg 3B thereof and bent right angles thereto so as to protrude in a second

direction counter to the first direction and, also, a second lower side stop 4A integrally formed with one of opposite side edges of the lower flat leg 3B of the second support strip 5B, which is offset relative to such one of the opposite side edges of the upper flat leg 3B of the second support strip 5B, and bent right angles thereto so as to protrude in the second direction.

According to the third embodiment of the present invention shown in Fig. 3, the first upper and lower side stops 4A and 8 both integral with the first support strip 5B cooperate with the second upper and lower side stops 8 and 4A both integral with the second support strip 5B and positioned offset relative to the first upper and lower side stops 4A and 8, respectively, with respect to the lengthwise direction of the flat legs 3B, so that, when the first and second support strips 5B are mated together in the manner described above, the first upper side stop 4A is held in abutment with the other of the opposite side edges of the upper flat leg 3B of the second support strip 5B; the first upper side stop 8 is held in abutment with the other of the opposite side edges of the upper flat leg 3B of the first support strip 5B; the first lower side stop 8 is held in abutment with the other of the opposite side edges of the lower flat leg 3B of the second support strip 5B; and the second lower side stop 4A is held in abutment with the other of the opposite side edges of the lower flat leg 3B of the first support strip 5B, thereby completing the motor support framework.

Thus, it is clear that, in the motor support framework shown in and described with reference to Fig. 3, any possible angular displacement between the first and second support strips

5B is effectively avoided and, accordingly, the strength of the motor support framework can be effectively increased. In addition, since the first upper and lower side stops 4A and 8 in the first support strip 5B and the second upper and lower side stope 8 and 4A in the second support strip 5B are all so positioned as to protrude at right angles to the associated flat legs 3B, the motor support framework shown in Fig. 3 is easy to assembly by means of a simple linear placement of one of the first and second support strips 5B towards the other of the first and second support strips 5B.

Furthermore, even though no spot-welding is exercised such as hitherto required, not only can the strength of the motor support framework advantageously be increased, but also the motor support framework can easily be assembled.

A fourth embodiment of the present invention is shown in Fig. 4.

Referring first to Fig. 4, the motor support framework shown therein comprises first and second support strips 5C of substantially identical construction. Each support strip 5C is in the form of a generally rectangular plate having its opposite ends bent at right angles to the remaining portion of the support strip 5C to define upper and lower fixtures 1 that protrude in the same direction. A generally or substantially intermediate portion of each support strip 5C is recessed, or otherwise curved in any suitable manner, in a direction conforming to the direction in which the associated fixtures 1 protrude, to thereby define a generally semicircular motor clamp 2. A generally or substantially intermediate portion of each support strip 5C

between each fixture 1 and the motor clamp 2 defines an upper or lower flat leg 3C. Each of the first and second support strips 5C also has at least one fitting lug 7 formed integrally with the respective motor clamp 2 for engagement with an associated lug 108 (Fig. 9) that is integral with a casing of the drive motor 105 as shown in Fig. 9.

Thus, so far as described above, the motor support framework shown in Fig. 4 is substantially similar to that according to the first embodiment of the present invention, except for no tab such as identified by 4 in Fig. 1 is employed. While the tabs 7 in the first embodiment of the present invention are used to connect the first and second support strips 5 together in a substantially non-detachable fashion, the upper flat leg 3C of the first support strip 5C is formed with a round alignment projection 9 so as to protrude outwardly in a direction opposite to the direction in which that portion of the first support strip 5C are recessed or curved to define the motor clamp 2, and the lower flat leg 3C of the first support strip 5C is formed with a round alignment hole 10. On the other hand, the upper flat leg 3C of the second support strip 5C is formed with a correspondingly round hole 10 and the lower flat legs 3C of the second support strip 5C is formed with a correspondingly round alignment projection 9 so as to protrude outwardly in a direction opposite to the direction in which that portion of the second support strip 5C are recessed or curved to define the motor clamp 2.

It will readily be seen that, when the first and second support strips 5C are mated together, the alignment projection 9 in the first support strip 5C is received in the alignment hole

10 in the second support strip 5C while the alignment hole 10 in the first support strip 5C receives therein the alignment projection 9 in the second support strip 5C, thereby to avoid any possible relative displacement of the first and second support strips 5C in a direction lengthwise thereof.

According to the fourth embodiment of the present invention, the use of the round projection 9 and the mating round hole 10 in the upper flat legs 3C of the first and second support strips 5C and the round hole 10 and the mating round projection 9 in the lower flat legs 3C of the first and second support strips 5C is effective to avoid any possible displacement of one of the first and second support strips 5C relative to the other of the first and second support strips 5C in a direction lengthwise thereof, thereby increasing the strength of the motor support framework as a whole. Also, the motor support framework shown in Fig. 4 is easy to assembly by means of a simple linear placement of one of the first and second support strips 5C towards the other of the first and second support strips 5C.

Moreover, with the motor support framework of the structure described hereinbefore, even though the first and second support strips 5C are not spot-welded together, the strength of the motor support framework can advantageously be increased, accompanied by ease to assembly.

In the embodiment shown in Fig. 4, the alignment projections 9 and the associated alignment holes 10 have been shown as round in shape. However, any suitable shape may be employed and this will be described in connection with a fifth embodiment of the present invention with reference to Fig. 5.

The motor support framework shown in Fig. 5 is substantially similar to that shown in Fig. 9, except that, in place of a combination of the projection 9 and the hole 10 defined in each of the first and second support strips as shown in Fig. 4, a combination of a generally elongated raised portion 11 and a slot 12 is employed.

More specifically, the motor support framework shown in Fig. 5 comprises first and second support strips 5D of substantially identical construction. Each support strip 5D is in the form of a generally rectangular plate having its opposite ends bent at right angles to the remaining portion of the support strip 5D to define upper and lower fixtures 1 that protrude in the same direction. A generally or substantially intermediate portion of each support strip 5D is recessed, or otherwise curved in any suitable manner, in a direction conforming to the direction in which the associated fixtures 1 protrude, to thereby define a generally semicircular motor clamp 2. A generally or substantially intermediate portion of each support strip 5D between each fixture 1 and the motor clamp 2 defines an upper or lower flat leg 3D. Each of the first and second support strips 5D also has at least one fitting lug 7 formed integrally with the respective motor clamp 2 for engagement with an associated lug 108 (Fig. 9) that is integral with a casing of the drive motor 105 as shown in Fig. 9.

The upper flat leg 3D of the first support strip 5D is formed with a generally elongated raised projection 11 so as to extend parallel to the lengthwise direction of the corresponding first support strip 5D and, also, so as to protrude outwardly in

a direction opposite to the direction in which that portion of the first support strip 5D are recessed or curved to define the motor clamp 2, and the lower flat leg 3D of the first support strip 5D is formed with an elongated slot 12. On the other hand, the upper flat leg 3D of the second support strip 5D is formed with an elongated slot 12 and the lower flat legs 3D of the second support strip 5D is formed with a generally elongated raised projection 11 so as to extend parallel to the lengthwise direction of the corresponding second support strip 5D and, also, so as to protrude outwardly in a direction opposite to the direction in which that portion of the second support strip 5D are recessed or curved to define the motor clamp 2.

When the first and second support strips 5D are mated together, the raised projection 11 in the first support strip 5D is received in the slot 12 in the second support strip 5D while the slot 12 in the first support strip 5D receives therein the raised projection 10 in the second support strip 5D, thereby to avoid any possible relative displacement of the first and second support strips 5D in a direction lengthwise thereof.

According to the fifth embodiment of the present invention, the use of the elongated projection 11 and the mating slot 12 in the upper flat legs 3D of the first and second support strips 5D and the slot 12 and the mating elongated projection 11 in the lower flat legs 3D of the first and second support strips 5D is effective to avoid any possible displacement of one of the first and second support strips 5D relative to the other of the first and second support strips 5D in a direction lengthwise thereof, thereby increasing the strength of the motor support

framework as a whole. Also, the motor support framework shown in Fig. 5 is easy to assembly by means of a simple linear placement of one of the first and second support strips 5D towards the other of the first and second support strips 5D.

Moreover, with the motor support framework of the structure described hereinbefore, even though the first and second support strips 5D are not spot-welded together, the strength of the motor support framework can advantageously be increased, accompanied by ease to assembly.

In a sixth embodiment of the present invention shown in Figs. 6 and 7, the motor support framework comprises first and second support strips 5E of substantially identical construction. Each support strip 5E is in the form of a generally rectangular plate having its opposite ends bent at right angles to the remaining portion of the support strip 5E to define upper and lower fixtures 1 that protrude in the same direction. A generally or substantially intermediate portion of each support strip 5E is recessed, or otherwise curved in any suitable manner, in a direction conforming to the direction in which the associated fixtures 1 protrude, to thereby define a generally semicircular motor clamp 2. A generally or substantially intermediate portion of each support strip 5E between each fixture 1 and the motor clamp 2 defines an upper or lower flat leg 3E. Each of the first and second support strips 5E also has at least one fitting lug 7 formed integrally with the respective motor clamp 2 for engagement with an associated lug 108 (Fig. 9) that is integral with a casing of the drive motor 105 as shown in Fig. 9.

As best shown in Fig. 7, the upper flat leg 3E of the first support strip 5E is formed with a round alignment projection 13 so as to protrude outwardly in a direction opposite to the direction in which that portion of the first support strip 5E are recessed or curved to define the motor clamp 2, and the lower flat leg 3E of the first support strip 5E is formed with a round alignment recess 14. On the other hand, the upper flat leg 3E of the second support strip 5E is formed with a correspondingly round alignment recess 14 and the lower flat legs 3E of the second support strip 5E is formed with a correspondingly round alignment projection 13 so as to protrude outwardly in a direction opposite to the direction in which that portion of the second support strip 5E are recessed or curved to define the motor clamp 2.

When the first and second support strips 5E are mated together, the round projection 13 in the first support strip 5E is received in the round recess 14 in the second support strip 5E while the round recess 14 in the first support strip 5E receives therein the round projection 10 in the second support strip 5E, thereby to avoid any possible relative displacement of the first and second support strips 5E in a direction lengthwise thereof.

According to the sixth embodiment of the present invention, the use of the round projection 13 and the mating round recess 14 in the upper flat legs 3E of the first and second support strips 5E and the round recess 14 and the mating round projection 13 in the lower flat legs 3E of the first and second support strips 5E is effective to avoid any possible displacement of one of the first and second support strips 5E relative to the

other of the first and second support strips 5E in a direction lengthwise thereof, thereby increasing the strength of the motor support framework as a whole. Also, the motor support framework shown in Fig. 5 is easy to assembly by means of a simple linear placement of one of the first and second support strips 5E towards the other of the first and second support strips 5E.

Moreover, since unlike the holes used in the embodiment of Fig. 4, each of the round recesses 14 does not extend completely across the thickness of the associated support strip 5E, the flat legs 3E in the embodiment of Fig. 6 have a correspondingly increased strength.

Furthermore, with the motor support framework of the structure described hereinbefore, even though the first and second support strips 5E are not spot-welded together, the strength of the motor support framework can advantageously be increased, accompanied by ease to assembly.

CLAIMS

1. A motor support framework for a ventilator fan assembly which comprises:

a first support strip having opposite ends bent at right angles to protrude in a first direction to define respective fixtures adapted to be secured to opposite side faces of a ventilator housing, a generally intermediate portion of said first support strip being recessed in said first direction to define a generally semicircular motor clamp while leaving flat legs on respective sides of the motor clamp in the first support strip;

a second support strip having opposite ends bent at right angles to protrude in a second direction counter to the first direction to define respective fixtures adapted to be secured to the opposite side faces of the ventilator housing, a generally intermediate portion of said second support strip being recessed in said second direction to define a generally semicircular motor clamp while leaving flat legs on respective sides of the motor clamp in the second support strip;

a first tab formed integrally with one of the flat legs of the first support strip so as to protrude laterally outwardly therefrom in a third direction; and

a second tab formed integrally with one of the flat legs of the second support strip so as to protrude laterally outwardly therefrom in a fourth direction counter to said third direction,

whereby when the first and second support strips are mated together with the flat legs of the first support strip held in contact with the flat legs of the second support strip to complete the motor support framework, said first tab is crimped

inwardly to firmly sandwich the other of the flat legs of the second support strip between it and said one of the flat legs of the first support strip while said second tab is crimped inwardly to firmly sandwich the other of the flat legs of the first support strip between it and said one of the flat legs of the second support strip.

2. A motor support framework for a ventilator fan assembly which comprises:

a first support strip having opposite ends bent at right angles to protrude in a first direction to define respective fixtures adapted to be secured to opposite side faces of a ventilator housing, a generally intermediate portion of said first support strip being recessed in said first direction to define a generally semicircular motor clamp while leaving flat legs on respective sides of the motor clamp in the first support strip;

a second support strip having opposite ends bent at right angles to protrude in a second direction counter to the first direction to define respective fixtures adapted to be secured to the opposite side faces of the ventilator housing, a generally intermediate portion of said second support strip being recessed in said second direction to define a generally semicircular motor clamp while leaving flat legs on respective sides of the motor clamp in the second support strip;

a first side stop formed integrally with one of the flat legs of the first support strip and bent in a third direction so as to lie perpendicular to such one of the flat legs of the first support strip; and

a second side stop formed integrally with one of the flat legs of the second support strip and bent in a fourth direction, counter to said third direction so as to lie perpendicular to such one of the flat legs of the second support strip,

whereby when the first and second support strips are mated together with the flat legs of the first support strip held in contact with the flat legs of the second support strip to complete the motor support framework, said first and second side stops prevent any angular displacement of one of the first and second support strips relative to the other of the first and second support strips.

3. A motor support framework for a ventilator fan assembly which comprises:

a first support strip having opposite ends bent at right angles to protrude in a first direction to define respective fixtures adapted to be secured to opposite side faces of a ventilator housing, a generally intermediate portion of said first support strip being recessed in said first direction to define a generally semicircular motor clamp while leaving flat legs on respective sides of the motor clamp in the first support strip;

a second support strip having opposite ends bent at right angles to protrude in a second direction counter to the first direction to define respective fixtures adapted to be secured to the opposite side faces of the ventilator housing, a generally intermediate portion of said second support strip being recessed in said second direction to define a generally semicircular motor clamp while leaving flat legs on respective sides of the motor clamp in the second support strip;

first upper and lower side stops formed integrally with the respective flat legs of the first support strip and bent in a third direction so as to lie perpendicular to such one of the flat legs of the first support strip, said first upper and lower side stops being positioned in an offset relation with each other with respect to the lengthwise direction of the first support strip; and

second upper and lower side stops formed integrally with the respective flat legs of the second support strip and bent in a fourth direction, counter to said third direction so as to lie perpendicular to such one of the flat legs of the second support strip, said second upper and lower side stops being positioned in an offset relation with each other with respect to the lengthwise direction of the second support strip,

whereby when the first and second support strips are mated together with the flat legs of the first support strip held in contact with the flat legs of the second support strip to complete the motor support framework, said first and second upper and lower side stops prevent any angular displacement of one of the first and second support strips relative to the other of the first and second support strips.

4. A motor support framework for a ventilator fan assembly which comprises:

a first support strip having opposite ends bent at right angles to protrude in a first direction to define respective fixtures adapted to be secured to opposite side faces of a ventilator housing, a generally intermediate portion of said first support strip being recessed in said first direction to define a

generally semicircular motor clamp while leaving flat legs on respective sides of the motor clamp in the first support strip, said flat legs of the first support strip having a round projection and a round hole defined therein, respectively; and

a second support strip having opposite ends bent at right angles to protrude in a second direction counter to the first direction to define respective fixtures adapted to be secured to the opposite side faces of the ventilator housing, a generally intermediate portion of said second support strip being recessed in said second direction to define a generally semicircular motor clamp while leaving flat legs on respective sides of the motor clamp in the second support strip, said flat legs of the second support strip having a round hole and a round projection defined therein, respectively;

whereby when the first and second support strips are mated together with the flat legs of the first support strip held in contact with the flat legs of the second support strip to complete the motor support framework, the round projections in the respective flat legs of the first and second support strips are received in the round holes in the respective flat legs of the first and second support strips to thereby avoid any angular displacement of one of the first and second support strips relative to the other of the first and second support strips.

5. A motor support framework for a ventilator fan assembly which comprises:

a first support strip having opposite ends bent at right angles to protrude in a first direction to define respective fixtures adapted to be secured to opposite side faces of a ven-

tilator housing, a generally intermediate portion of said first support strip being recessed in said first direction to define a generally semicircular motor clamp while leaving flat legs on respective sides of the motor clamp in the first support strip, said flat legs of the first support strip having a generally elongated projection and a correspondingly elongated slot defined therein, respectively; and

a second support strip having opposite ends bent at right angles to protrude in a second direction counter to the first direction to define respective fixtures adapted to be secured to the opposite side faces of the ventilator housing, a generally intermediate portion of said second support strip being recessed in said second direction to define a generally semicircular motor clamp while leaving flat legs on respective sides of the motor clamp in the second support strip, said flat legs of the second support strip having an elongated slot and a correspondingly elongated projection defined therein, respectively;

whereby when the first and second support strips are mated together with the flat legs of the first support strip held in contact with the flat legs of the second support strip to complete the motor support framework, the elongated projections in the respective flat legs of the first and second support strips are received in the corresponding slots in the respective flat legs of the first and second support strips to thereby avoid any angular displacement of one of the first and second support strips relative to the other of the first and second support strips.

6. A motor support framework for a ventilator fan assembly which comprises:

a first support strip having opposite ends bent at right angles to protrude in a first direction to define respective fixtures adapted to be secured to opposite side faces of a ventilator housing, a generally intermediate portion of said first support strip being recessed in said first direction to define a generally semicircular motor clamp while leaving flat legs on respective sides of the motor clamp in the first support strip, said flat legs of the first support strip having a raised projection and a round recess defined therein, respectively; and

a second support strip having opposite ends bent at right angles to protrude in a second direction counter to the first direction to define respective fixtures adapted to be secured to the opposite side faces of the ventilator housing, a generally intermediate portion of said second support strip being recessed in said second direction to define a generally semicircular motor clamp while leaving flat legs on respective sides of the motor clamp in the second support strip, said flat legs of the second support strip having a round recess and a raised projection defined therein, respectively;

whereby when the first and second support strips are mated together with the flat legs of the first support strip held in contact with the flat legs of the second support strip to complete the motor support framework, the raised projections in the respective flat legs of the first and second support strips are received in the round recesses in the respective flat legs of the first and second support strips to thereby avoid any angular

displacement of one of the first and second support strips relative to the other of the first and second support strips.

7. A motor support framework for a ventilator fan assembly, substantially as described with reference to Figures 1 to 7 of the accompanying drawings.

REGISTER ENTRY FOR GB2281102

Form 1 Application No GB9415241.0 filing date 28.07.1994

Priority claimed:
30.07.1993 in Japan - doc: 05190027

Title VENTILATOR MOTOR SUPPORT FRAMEWORK

Applicant/Proprietor
MATSUSHITA SEIKO CO., LTD., Incorporated in Japan, (2-61 Imafuku Nishi 6-chome, Joto-ku, Osaka, Japan) [ADP No. 00592360001]

Inventor
MASATSUGU OTOBE, 4344 Kitatoyama aza Takebayashi, Komaki-shi, Aichi-ken, Japan [ADP No. 06603401001]

Classified to
F1C H2A
F04D

Address for Service
GILL JENNINGS & EVERY, Broadgate House, 7 Eldon Street, LONDON, EC2M 7LH, United Kingdom [ADP No. 00000745002]

Publication No GB2281102 dated 22.02.1995

Examination requested 28.07.1994

Patent Granted with effect from 09.08.1995 (Section 25(1)) with title
VENTILATOR MOTOR SUPPORT FRAMEWORK

**** END OF REGISTER ENTRY ****

RENEWAL DETAILS

PUBLICATION NUMBER GB2281102

PROPRIETOR(S)

Matsushita Seiko Co., Ltd., Incorporated in Japan, (2-61 Imafuku Nishi 6-chome, Joto-ku, Osaka, Japan)

DATE FILED 28.07.1994

DATE GRANTED 09.08.1995

DATE NEXT RENEWAL DUE 28.07.1998

DATE NOT IN FORCE

DATE OF LAST RENEWAL

YEAR OF LAST RENEWAL 00

STATUS PATENT IN FORCE

**** END OF REPORT ****