Dec. 18, 1923. 1,477,899

C. W. RICE

HIGH FREQUENCY SIGNALING SYSTEM

Filed July 27. 1921

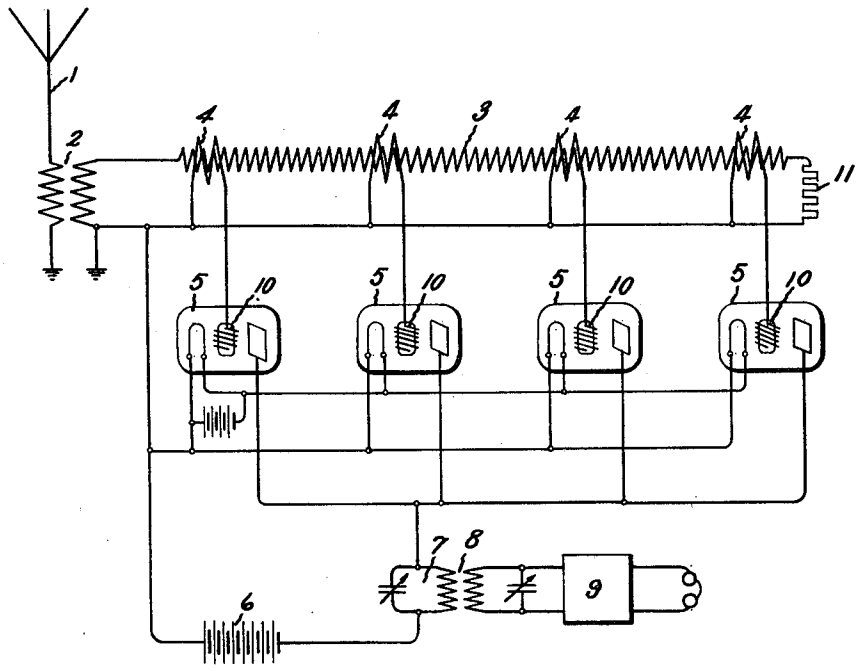

Inventor:
Chester W. Rice,
by Albert G. Davis
His Attorney.

Patented Dec. 18, 1923. 1,477,899

UNITED STATES PATENT OFFICE.

CHESTER W. RICE, OF SCHENECTADY, NEW YORK, ASSIGNOR TO GENERAL ELECTRIC COMPANY, A CORPORATION OF NEW YORK.

HIGH-FREQUENCY SIGNALING SYSTEM.

Application filed July 27, 1921. Serial No. 487,998.

To all whom it may concern:

Be it known that I, CHESTER W. RICE, a citizen of the United States, residing at Schenectady, in the county of Schenectady, State of New York, have invented certain new and useful Improvements in High-Frequency Signaling Systems, of which the following is a specification.

My present invention relates to high frequency signaling systems, and more particularly to systems for receiving high frequency radio signals.

The object of my invention is to provide an improved system for the reception of high frequency radio signals whereby the stray or static ratio may be materially improved.

In carrying my invention into effect I provide at the receiving station a means for storing up the energy of the received high frequency impulses for a plurality of successive cycles of the high frequency current and means for impressing simultaneously upon the receiving apparatus a plurality of currents produced by energies received at different time periods. The energy storing means may be in the form of an artificial transmission line which preferably has an effective length equal to a plurality of wave lengths of the signals to be received. The signals to be received are impressed upon this transmission line and currents in the transmission line from a plurality of selected points along its length are impressed upon receiving apparatus in such a way that these currents will add amplitudes in the receiving apparatus. The amplitude of the current impressed upon the receiving apparatus will consequently be equal to the arithmetical sum of the amplitudes of the respective currents or the product of the number of separate currents and the maximum amplitude of one, all these currents being substantially proportional to the amplitude of the signaling current in the transmission line. Stray currents of short duration which may be impressed upon the transmission line will however be of different amplitude at the different points in the transmission line from which currents are selected, and in case by chance these stray currents add amplitudes in the receiving apparatus their sum will not be equal to the product of the number of stray currents by the maximum amplitude, but will be of a value somewhat smaller than such product. Stray currents having a different frequency than the signaling current will have different phase relations along the transmission line from the signaling currents, and as a result such currents will not add amplitudes in the receiving apparatus, but will merely add energies. As a result the stray ratio may be considerably improved.

The novel features which I believe to be characteristic of my invention are set forth in the appended claims, my invention itself, however, both as to its organization and method of operation will best be understood by reference to the following description taken in connection with the accompanying drawing in which I have indicated diagrammatically one way in which my invention may be carried into effect.

As indicated in the drawing, currents received upon a receiving antenna 1 are impressed by means of the usual coupling transformer 2 upon an artificial transmission line 3, which preferably has an effective length at least equal to several wave lengths of the signaling currents to be received. By means of the couplings 4 located at different points along the transmission line, signaling currents may be impressed upon the input circuits of an equal number of vacuum tube amplifiers 5. The output circuits of these amplifiers are connected in parallel and supplied with energy by the common source 6, these output circuits may or may not include a reasonant circuit 7 which is tuned for the signaling frequency. The signaling currents set up in the output circuits may be impressed by means of the coupling 8 upon the input circuit of a detector 9, or if desired, other amplifiers may be interposed between the output circuits of amplifiers 5 and the detectors. The end of the transmission line distant from the receiving antenna is preferably shunted by a resistance 11 equal to the surge impedance of the transmission line in order to prevent any reflection of the currents transmitted over the line.

In the circuit arrangement illustrated it is assumed that the coupling coils 4 are lo-

cated a wave length or a multiple of a wave length apart along the transmission line. By this arrangement the signaling current impressed upon the transmission line will cause the potential of the grids 10 of the different amplifiers to vary in phase. The corresponding current variations produced in the output circuits of the amplifiers will therefore be in phase and will add amplitudes.

Each dot or dash of the telegraphic signal being ordinarily made up of a large number of cycles of the high frequency current the signaling currents thus impressed upon the signaling apparatus will after the first few cycles of the signal all be of substantially equal amplitude. The amplitude of the current produced in the combined output circuits therefore will be equal to the arithmetical sum of the amplitudes of the separate currents, or the product of the current in one amplifier multiplied by the number of amplifiers employed. Stray impulses on the other hand of short duration or high decrement will ordinarily be of the maximum amplitude at any instant at only one or two of the points at which the signaling currents are selected. In case such impulses are of the same frequency as the signaling currents so that they will add amplitudes in the receiving apparatus, the total amplitude of such currents in the receiving apparatus will be of a value materially less than the product of the maximum amplitude by the number of amplifiers employed.

For stray currents which are not of the same frequency as the signaling current, the currents produced in the output circuits of the amplifiers will not be in phase, and as a result the energies of these currents only will be added in the output circuits and not their amplitudes. As a result the stray ratio with respect to such impulses will also be materially improved.

While in the system illustrated and described all the signaling currents are assumed to be selected from points along the line which are a wave length or a multiple of a wave length apart, it will be apparent that similar results may be obtained by selecting points a half wave length or a multiple of a half wave length apart, and by impressing the currents from the output circuits of the different amplifiers upon the receiving apparatus in such a way that they will all be in phase and will therefore add amplitudes.

What I claim as new and desire to secure by Letters Patent of the United States, is:

1. The combination in a high frequency signal receiving system of an artificial transmission line having an effective length equal to a plurality of wave lengths of the signals to be received, means for impressing the signaling currents to be received upon said transmission line, receiving apparatus and means for impressing upon said receiving apparatus signaling currents derived from more than two points in said transmission line.

2. Means for improving the stray ratio in a high frequency signal receiving system comprising an artificial transmission line having an effective length equal to a plurality of wave lengths of the signals to be received, means for impressing signaling currents to be received upon said transmission line, receiving apparatus and means for impressing upon said receiving apparatus signaling currents derived from more than two points in said transmission line so chosen that the signaling currents will add amplitudes in the receiving apparatus while interfering currents of different frequency will add energies only.

3. The combination in a high frequency signal receiving system of an artificial transmission line having an effective length equal to a plurality of wave lengths of the signals to be received, means for impressing the signaling currents to be received upon said transmission line, receiving apparatus and means for impressing upon said receiving apparatus signaling currents derived from a plurality of points in said transmission line, said points being a wave length or a multiple of a wave length apart.

4. The combination in a high frequency signal receiving system of an artificial transmission line having an effective length equal to a plurality of wave lengths of the signals to be received, means for impressing the signaling currents to be received upon said transmission line, receiving apparatus and means for impressing upon said receiving apparatus signaling currents derived from more than two points in said transmission line, said points being so chosen and the different signaling currents impressed upon the receiving apparatus in such a way that the signaling currents will add amplitudes in the receiving apparatus.

5. The combination in a high frequency signal receiving system of an artificial transmission line having an effective length equal to a plurality of wave lengths of the signals to be received, means for impressing the signaling currents to be received upon one end of said transmission line, the other end of said transmission line being provided with means for preventing reflection, receiving apparatus, and means for impressing upon said receiving apparatus signaling currents derived from more than two points in said transmission line.

6. The combination in a high frequency signal receiving system of an artificial transmission line having an effective length equal to a plurality of wave lengths of the signals to be received, means for impress-

ing the signaling currents to be received upon one end of said transmission line, the other end of said transmission line being shunted by a resistance equal to its surge impedance, receiving apparatus, and means for impressing upon said receiving apparatus signaling currents derived from more than two points in said transmission line.

7. The combination in a high frequency signal receiving system of an artificial transmission line having an effective length equal to a plurality of wave lengths of the signals to be received, means for impressing the signaling currents to be received upon said transmission line, receiving apparatus and more than two vacuum tube amplifiers having their input circuits coupled to a plurality of points in said transmission line, and their output circuits connected to the receiving apparatus.

8. The combination in a high frequency signal receiving system of an artificial transmission line having an effective length equal to a plurality of wave lengths of the signals to be received, means for impressing the signaling currents to be received upon said transmission line, receiving apparatus and a plurality of vacuum tube amplifiers having their input circuits coupled to a plurality of points in said transmission line which are a wave length or a multiple of a wave length apart, and their output circuits connected to the receiving apparatus.

9. The combination in a high frequency signal receiving system of an artificial transmission line having an effective length equal to a plurality of wave lengths of the signals to be received, means for impressing the signaling currents to be received upon said transmission line, receiving apparatus and more than two vacuum tube amplifiers having their input circuits coupled to a plurality of points in said transmission line, and their output circuits connected to the receiving apparatus, said points being so chosen and the output circuits of the amplifiers being so connected to the receiving apparatus that the signaling currents will add amplitudes in the receiving apparatus.

10. The combination in a high frequency signal receiving system of an artificial transmission line having an effective length equal to a plurality of wave lengths of the signals to be received, means for impressing the signaling currents to be received upon said transmission line, receiving apparatus and more than two vacuum tube amplifiers having their input circuits coupled to a plurality of points in said transmission line and their output circuits connected to the receiving apparatus said points being so chosen and the output circuits of the amplifiers being so connected to the receiving apparatus that the signaling currents will add amplitudes in the receiving apparatus while interfering currents of different frequency will add energies only.

11. The combination in a high frequency signal receiving system of an artificial transmission line having an effective length equal to a plurality of wave lengths of the signals to be received, means for impressing the signaling currents to be received upon one end of said transmission line, the other end of said transmission line being shunted by a resistance equal to its surge impedance, receiving apparatus, and more than two vacuum tube amplifiers having their input circuits coupled to a plurality of points in said transmission line and their output circuits connnected to the receiving apparatus, said points being so chosen and the output circuits of the amplifiers being so connected to the receiving apparatus that the signaling currents will add amplitudes in the receiving apparatus, while interfering currents of different frequency will add energies only.

12. The combination in a high frequency signal receiving system of means for storing up the energy of received high frequency electrical impulses, receiving apparatus and means for impressing upon the receiving apparatus simultaneously more than two currents produced by the energies of signaling impulses received at different time periods.

13. The combination in a radio receiving system of a receiving antenna, means for storing up the energy of high frequency electrical impulses received upon said antenna, receiving apparatus and means for impressing upon the receiving apparatus simultaneously more than two currents produced by the energies of signaling impulses received at different time periods.

14. The combination in a high frequency signal receiving system of means for storing up the energy of received high frequency electrical impulses, receiving apparatus and means for impressing upon the receiving apparatus more than two substantially in phase currents produced by the energies of desired signaling impulses received at different time periods.

15. The method of receiving high frequency signals which consists in storing up the energy of received high frequency impulses representing signals and impressing upon a receiving apparatus more than two currents produced by the energies of signaling impulses received at different time periods.

16. The method of receiving high frequency signals which consists in storing up the energy of high frequency electrical impulses representing signals and impressing upon a receiving apparatus more than two substantially in phase currents produced by

the energies of desired signaling impulses received at different time periods.

17. The method of improving the stray ratio in a radio receiving system which consists in storing up the energy of received high frequency impulses and impressing up a receiving apparatus more than two currents produced by energies received at different time periods in such a way that currents produced by desired signaling impulses will add amplitudes in the receiving apparatus while currents produced by interfering impulses will merely add energies.

In witness whereof, I have hereunto set my hand this 26th day of July, 1921.

CHESTER W. RICE.