F. J. QUIST.

CARPET CLEANER.

APPLICATION FILED NOV. 2, 1914.

1,169,191.

Patented Jan. 25, 1916.

Fig. 1

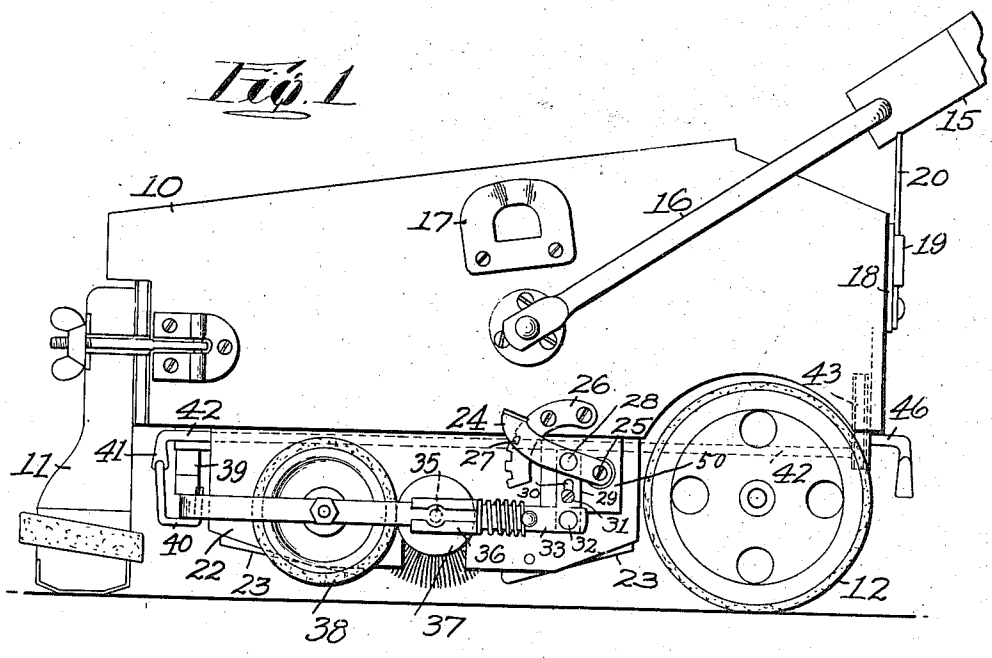

Fig. 2.

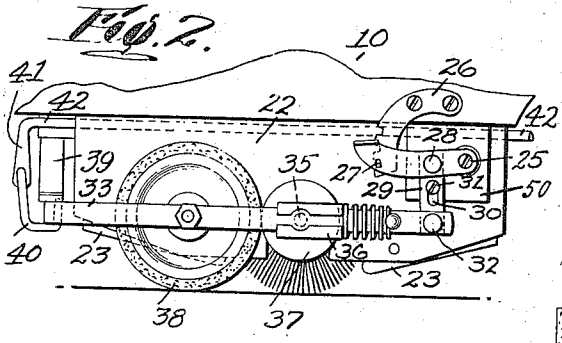

Fig. 3.

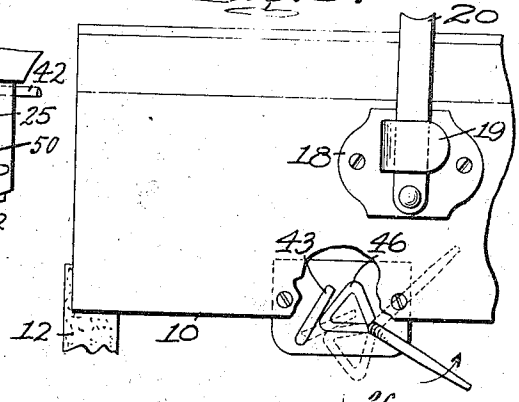

Fig. 4.

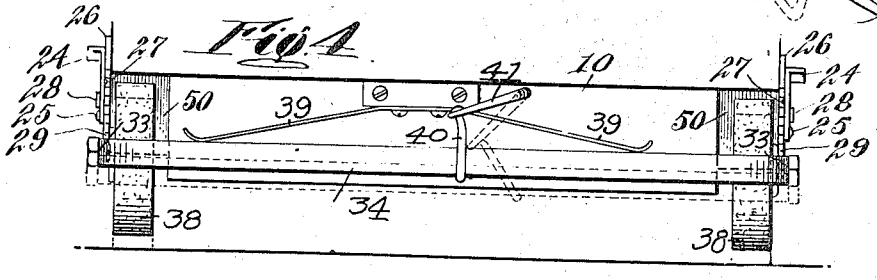

Witnesses:
C. F. Mason
C. A. Hartnett

Inventor
F. J. Quist
by Attorneys
Southgate & Southgate.

UNITED STATES PATENT OFFICE.

FRANK J. QUIST, OF WORCESTER, MASSACHUSETTS.

CARPET-CLEANER.

1,169,191. Specification of Letters Patent. Patented Jan. 25, 1916.

Application filed November 2, 1914. Serial No. 869,791.

To all whom it may concern:

Be it known that I, FRANK J. QUIST, a citizen of the United States, residing at Worcester, in the county of Worcester and State of Massachusetts, have invented a new and useful Carpet-Cleaner, of which the following is a specification.

This invention relates to a carpet cleaner of the type in which a complete pneumatic cleaner is provided with a brush sweeper on the bottom thereof, this brush sweeper being a complete operating attachment.

The principal objects of this invention are to provide a thoroughly sanitary combination of these two mechanisms by arranging a simple device operable from the end of the casing for raising and lowering the brush and its operating wheels, so that the dust raising brush can be kept out of operation until all the loose dust is taken up by the suction cleaner; to provide a simple means whereby the same can be conveniently operated by the foot; to provide means independent thereof whereby the point of pivotal support of the operating wheels for the brush, and in fact the brush itself, can be adjusted up and down to vary the pressure of the wheels on the surface to be cleaned, and to permit of using the brush with efficiency on surfaces of different characters; and to provide improvements in details of construction of these parts.

Reference is to be had to the accompanying drawings in which,

Figure 1 is a side view of a machine constructed in accordance with this invention and showing a preferred embodiment thereof; Fig. 2 is a similar view showing the parts in a different adjusted position; Fig. 3 is a rear elevation with parts broken away to show interior construction and showing another position of some of the parts in dotted lines, and Fig. 4 is a front elevation of the sweeper portion of the device showing some of the parts in two positions in full and dotted lines respectively.

The invention is shown as applied to a well known type of pneumatic cleaning device, comprising a main casing 10, supporting nozzle 11 on the front end, and supporting wheels 12 on the rear end. It will be understood that these wheels 12 are connected with pneumatic devices, not shown, for operating the same as the machine is moved along.

The operating handle 15 is pivotally connected by a bail or the like 16 with the body of the casing, as usual, and is adapted to be held in vertical position by a spring clip 17, as is now well understood in this art. For the purpose of supporting the handle and bail in inclined position, the casing is provided with a plate 18 on the rear having an integral guard and stop 19 in the form of a tongue thereon. Pivoted to this is a support 20 adapted to be swung up under this tongue and be held there by friction. It projects up to such a height that its upper end, which is provided with a notch for that purpose, will receive the end of the handle and support it in inclined position. When this is not to be used, the support can be swung down away from the tongue and will then be free and out of the way.

On the bottom of the main casing 10 is supported a brush casing 22 provided with the usual dust-pans 23. Supported in connection with the main casing and brush casing are opposite adjusting levers 24 each having a pivot 25 mounted on a block 50 on which it swings. The end of this lever is bent out to act as a handle. A sector 26 fixed on the main casing is provided with notches for receiving a projection 27 on the lever 24 and holding it in its adjusted positions. This lever 24 is substantially horizontal and is provided with a pivot 28 for connecting it with a sliding link 29. This link has a slot 30 through which a headed stud or screw 31 projects. This slot and stud act as a guide for this link and at the same time hold the link against lateral motion. The bottom of this link is connected by a pivot 32 with an arm 33. These parts are duplicated on the other side.

The two arms 33 with a connecting member 34 constitute a pivoted frame for the brush shaft 35 which is carried by a pair of spring-pressed metal supports 36 slidable on the arms. The shaft of the brush is provided as usual with two rolls 37 for engaging the rolls 38 which are adapted to en-

gage the surface over which the device moves, for the purpose of operating the brush, as will be obvious.

The pivoted frame for supporting the brush and rollers is held down toward the floor by a spring 39 and is prevented from moving too far down by a hook 40 which acts as a stop. This hook is connected with an arm 41 on a longitudinal rod 42. This rod passes through or above the brush casing to the rear of the main casing and at that end it is provided with another arm 43. It is adapted to be operated in opposition to the spring 39 by a lever 46, one arm of which engages the arm of the rod and the other arm of which constitutes a handle on the back of the casing for operating it. The two positions of these parts are shown in Figs. 3 and 4 in full and dotted lines, respectively.

It will be seen that the brush cleaner can be raised and lowered so as to be rendered operative or inoperative by means of the handle on the lever 46 at the rear of the sweeper, and that this is located at a convenient point near the floor where it can be operated by the foot. Furthermore, the proper adjustment of the brush and its operating rollers toward and from the surface over which the machine moves is secured in a simple and effective manner by the manipulation of the levers 24. In this way the cleaner can be adjusted to operate on carpets and rugs of different characters and the sweeper can be put out of operation very readily. This is an improvement, because, ordinarily, the vacuum cleaner is sufficient for performing the usual cleaning operations and it is only in exceptional cases that the sweeper has to be used. When not in use it can be moved up out of the way so its parts are not wearing and dust is not collecting in the dust boxes with which it is provided.

Although I have illustrated and described a particular embodiment of the invention and shown it as applied to a specific form of vacuum cleaner and brush sweeper, I am aware of the fact that many modifications can be made in the details of construction of the invention and that it can be applied to other types of sweepers and suction cleaners without departing from the scope of the invention as expressed in the claims. Therefore, I do not wish to be limited in these respects, but

What I do claim is:—

1. In a carpet cleaner, the combination of a casing, a frame pivoted at a point near the rear thereof, a brush and operating rollers carried by said frame, means independent of said rollers for supporting said casing, yielding means for holding said frame down, positive means for moving the frame up in opposition to said yielding means, and a handle at the rear of said casing for operating said positive means.

2. In a carpet cleaner, the combination of a casing, a frame pivoted to the casing, a brush, a roller carried by said frame for operating the brush, yielding means for holding said frame down, and positive means for holding the frame up in opposition to said yielding means, said positive means comprising a rod extending from the free end of said frame to the rear of the casing, and a handle at the rear of the casing for operating it.

3. In a carpet cleaner, the combination of a movable frame, a brush carried by said frame, a rod having an arm on the end thereof connected with one end of said frame for raising it, and an arm on the opposite end thereof, said opposite end of the rod extending to the rear, and a lever having one arm constituting a handle for operating it and the other arm engaging the last named arm on said rod for turning the rod.

4. In a carpet cleaner, the combination of a casing, a frame pivoted on the casing, a brush and operating rollers carried by said frame, means for moving the frame up about its pivots, a handle at the rear of said casing for operating said means, and means for vertically adjusting the pivots of said frame.

5. In a carpet cleaner, the combination of a support, a frame pivoted thereon, a brush carried by said frame, means for swinging said frame about its pivots to raise and lower the brush into operative and inoperative positions, and means for vertically adjusting the pivots of said frame.

6. In a carpet cleaner, the combination of a pivoted frame, a support therefor, a brush carried by said frame, means for swinging said frame about its pivots to raise and lower the brush into operative and inoperative positions, a pair of vertically movable links on which said frame is pivoted, means for raising and lowering said links, and means for holding the links in their adjusted positions.

7. In a carpet cleaner, the combination of a pair of levers each having a projection, a support on which said levers are pivoted, a pair of segments on said support having notches for receiving said projections and holding the levers in adjusted positions, a vertically movable link pivoted to each lever, and a brush frame pivotally connected with said links whereby the pivots of said brush frame can be raised and lowered.

8. In a carpet cleaner, the combination of a casing, a swinging frame, a pivotal connection carried by the casing on which said frame is pivoted, a brush carried by said frame at a distance from said pivotal con-

nection, means at the free end of the frame for locating it at a plurality of predetermined elevations, and means for adjusting said pivotal connection up and down on the casing.

9. In a carpet cleaner, the combination of a pair of levers each having a projection, a support on which said levers are pivoted, a pair of segments on said support having notches for receiving said projections and holding the levers in adjusted positions, and a pivoted brush frame the pivots thereof being connected with said levers, whereby the pivots of said brush frame can be raised and lowered.

In testimony whereof I have hereunto set my hand, in the presence of two subscribing witnesses.

FRANK J. QUIST.

Witnesses:
ALBERT E. FAY,
C. FORREST WESSON.