March 13, 1928. 1,662,602

K. DÜNKELBERG

APPARATUS FOR COOLING WATER

Filed Oct. 28, 1924 2 Sheets-Sheet 1

Fig. 2

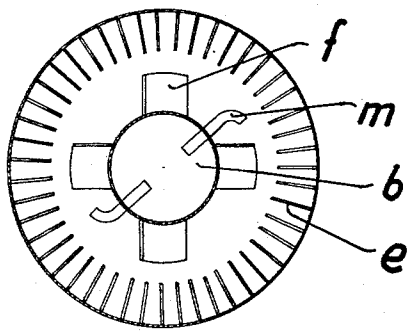

Fig. 1

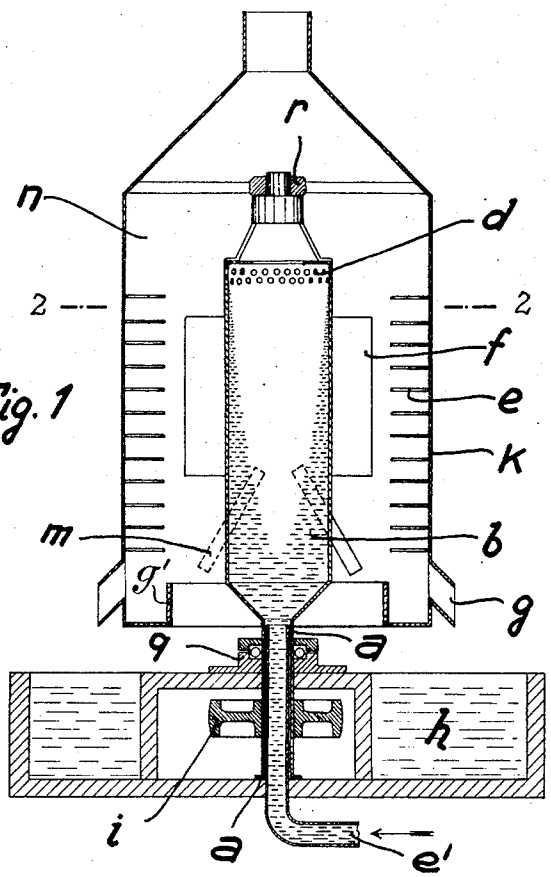

Karl Dünkelberg
by C. P. Goepel
Attorney.

March 13, 1928. 1,662,602

K. DÜNKELBERG

APPARATUS FOR COOLING WATER

Filed Oct. 28, 1924 2 Sheets-Sheet 2

Fig. 3

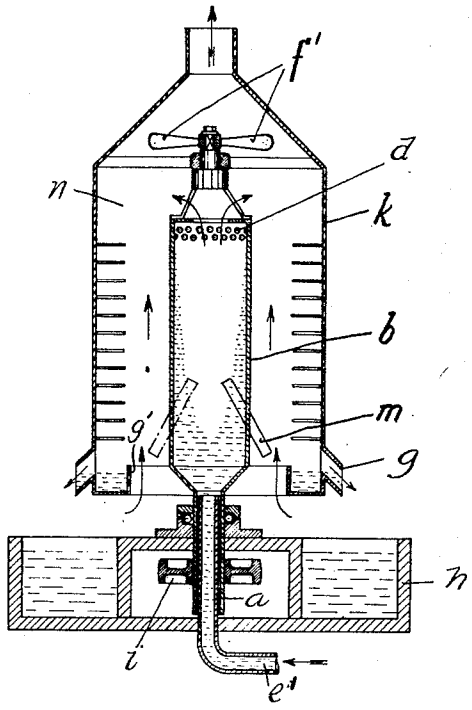

Fig. 4

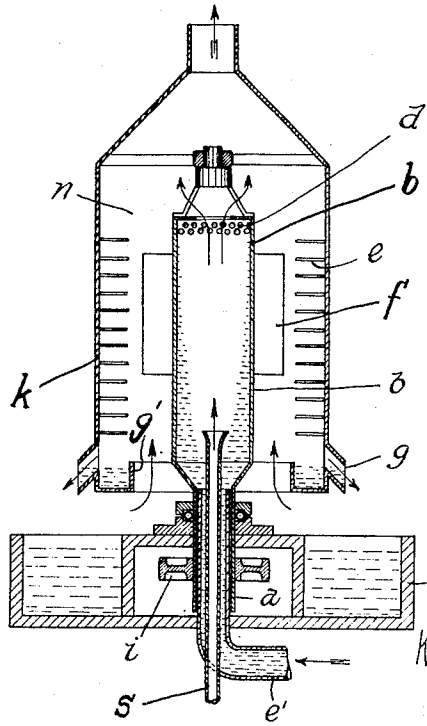

Inventor
Karl Dünkelberg.

By C. P. Goepel,
Attorney.

Patented Mar. 13, 1928. 1,662,602

UNITED STATES PATENT OFFICE.

KARL DÜNKELBERG, OF GELSENKIRCHEN, GERMANY.

APPARATUS FOR COOLING WATER.

Application filed October 28, 1924, Serial No. 746,271, and in Germany November 5, 1923.

My invention relates to improvements in apparatus for cooling water, and more particularly in apparatus for cooling large volumes of water, such for example as the cooling water of condensation plants. The object of the improvements is to provide a system which requires little space and which is economical in operation. With this object in view my invention consists in distributing the hot water in the form of a thin film on the inner wall of a rotating receptacle, and thereafter ejecting the same into a cooling chamber located around the said receptacle and traversed by a current of air.

For the purpose of explaining the invention an example embodying the same has been shown in the accompanying drawing in which the same reference characters have been used in all the views to indicate corresponding parts. In said drawing,

Fig. 1, is a vertical sectional view of the apparatus, and

Fig. 2, is a sectional view taken on the line 2—2 of Fig. 1.

Figs. 3 and 4 are vertical sectional views showing certain modifications.

In the example shown in Fig. 1 my improved cooling apparatus comprises an outer casing k open at its top and provided at its wall with an annular set of rods or projections e adapted to distribute the water falling thereon. Within the casing k a cylindrical open topped receptacle b is mounted which is formed at its bottom with a tubular extension or shaft a guided in a bearing q and carrying a belt pulley i for imparting rotary movement to the receptacle b. At its top the receptacle b is guided in a crosspiece r secured to the wall of the casing k. The tubular shaft a communicates with an inlet pipe e' adapted to supply the hot water to the rotary receptacle b. At its outer wall the receptacle b carries wings f disposed angularly of the axis of the receptacle and providing a fan for drawing a current of air in upward direction through the chamber n, and near its top it is provided with perforations d. In some cases I provide the wings at the top of the receptacle and above the set of fingers e. A vertical disposed annular rim of flange g', the upper edge of which is slightly above the discharge level of g, is provided at the bottom of the casing k, for collecting the cooled water. The casing k is provided near its bottom with discharge passages g through which the water flows into the receptacle h from which it is returned to the condensers. The rotary receptacle b is provided with air admission pipes m opening near the axis of the receptacle, so that the water has no access thereto. Preferably the outer ends of the said pipes are curved forwardly and in the direction of the rotation of the receptacle so as to act in the manner of buckets taking in the air from the vessel k and delivering the same into the receptacle b. In a modification of the apparatus as shown in Fig. 4 I supply the air through a pipe disposed axially of the receptacle. For example the air may be supplied through the hollow shaft s extended upwardly into the inner or air space of the receptacle, the water being supplied through a pipe e' through which the tubular member s passes, the pipe e' opening into the receptacle b at the bottom thereof as previously described.

The operation of the apparatus is as follows: The receptacle b is rapidly rotated, and the hot water is supplied thereto through a pipe e' and the hollow shaft a. By centrifugal action the water is distributed on the inner wall of the receptacle in the form of a thin film which, due to gravity, would be somewhat thicker at the lower part of the rotary receptacle. When thus flowing through the receptacle b, the water is cooled by the current of air flowing along the outer face of the receptacle and by the air admitted through the pipes m or the pipe s as the case may be. From the top part of the receptacle b the water is thrown in a state of fine distribution into the chamber n; it falls downwardly and is further distributed by the rods or projections e. The air escapes from the inside of the rotary receptacle through the open top thereof, as shown by the arrows in all of the figures of the drawing. The wings f or f' acting as a fan produce a current of air in upward direction and through the chamber n, by means of which the water moving downwardly through the casing k is further cooled. The water delivered through the discharges g and collected within the tank h is sufficiently reduced in temperature to be again used for cooling purposes.

From the foregoing description it will be understood that by means of my improved apparatus large volumes may be cooled on a comparatively small space, in a very effective way, and within a minimum of time. Fur-

ther the cooling effect may be regulated within broad limits by varying the number of revolutions of the receptacle *b* and the supply of cooling air.

While in describing the invention reference has been made to a particular example embodying the same I wish it to be understood that my invention is not limited to the construction shown in the drawing, and that various changes may be made in the general arrangement of the apparatus and the construction of its parts without departing from the invention.

I claim:

1. In an apparatus for cooling liquids, a rotary receptacle having at one end an inlet for the liquid to be cooled, said receptacle being open at its opposite end and adapted to eject the liquid laterally therefrom when rotated, means to produce a current of air through said rotary receptacle upon rotation, a casing surrounding the said receptacle, and means to produce a current of air through said casing transversely of the liquid ejected from the receptacle.

2. In an apparatus for cooling liquids, a rotary receptacle turning on a vertical axis and provided at one end with an inlet for the liquid to be cooled and adapted to eject the liquid laterally from its opposite end, means to produce a current of air through said rotary receptacle, a casing surrounding the said receptacle, and means to cause a current of air through said casing in upward direction and transversely of the liquid ejected from the receptacle.

3. An apparatus for cooling water, comprising a vertically disposed rotary receptacle, having water discharge openings at the top thereof through which the water is discharged laterally, a casing surrounding the rotary receptacle for catching the water leaving said discharge openings, means for delivering hot water to the receptacle, and means for passing air through both the rotary receptacle and the casing at right angles to the plane on which the water is discharged from the receptacle.

4. An apparatus for cooling water, comprising a vertically disposed rotary receptacle having discharge openings at the top through which water is discharged laterally, means for feeding hot water into the lower end of the receptacle, means to rotate the receptacle whereby the water spreads on the inside of the rotary receptacle in a body growing progressively thinner toward the discharge openings and eventually discharging therethrough, a casing surrounding the rotary receptacle for catching the water discharging from the rotary receptacle, and means for passing air through the rotary receptacle and the casing at right angles to the plane in which the water is discharged.

5. An apparatus for cooling water, comprising a vertically disposed rotary receptacle having escape openings at the top through which water is discharged laterally, means for feeding water at or above normal temperatures into the lower end of the receptacle, means to rotate the receptacle whereby the water spreads on the inside thereof in a body growing progressively thinner toward the escape openings, a casing surrounding the rotary receptacle for catching the water leaving the rotary receptacle and fan means driven by the rotary receptacle for causing air to pass upwardly through the casing, and through the rotary receptacle.

6. An apparatus for cooling water, comprising a vertically disposed rotary receptacle, having openings at the top thereof for the escape of water and air laterally when the receptacle is rotated, a casing surrounding the rotary receptacle for catching the water leaving said escape openings, means for delivering hot water to the receptacle, and means including fan members driven by the rotary receptacle for passing air through both the rotary receptacle and the casing for cooling the water.

7. An apparatus for cooling water, comprising a vertically disposed rotary receptacle, means for delivering hot water into the lower part of the rotary receptacle, the rotary receptacle having escape openings for water at the top thereof, means to rotate the receptacle to cause the water therein to grow progressively thinner toward the escape openings and to discharge therethrough in a plane at right angles to the axis of rotation, a casing surrounding the rotary receptacle for catching the water leaving said escape openings, and means mounted on the receptacle for passing air through said casing at right angles to the plane of discharge of the water.

8. An apparatus for cooling water, comprising a vertically disposed rotary receptacle having openings at the top for the escape of water and air laterally when the receptacle is rotated, a casing around the rotary receptacle for catching the water leaving said escape openings, means for leading hot water into the lower part of the rotary receptacle, means for leading cooling air into the lower part of the rotary receptacle and means for passing cooling air upwardly through said casing and through the rotary receptacle.

9. An apparatus for cooling water, comprising a vertically disposed rotary receptacle, axially disposed means for delivering hot water into the lower part of the rotary receptacle, the rotary receptacle having escape openings for water at the top thereof through which the water is disposed laterally when the receptacle is rotated, a casing surrounding the rotary receptacle for catching the water leaving said escape openings,

and means including fan members mounted on the rotary receptacle for passing air upwardly through said casing and the receptacle.

10. An apparatus for cooling water, comprising a vertically disposed rotary receptacle having openings at the top for the escape of water and air laterally when the receptacle is rotated, a casing around the rotary receptacle for catching the water leaving said escape openings, axially disposed means for leading hot water into the lower part of the rotary receptacle, means for leading cooling air into the lower part of the rotary receptacle, and means, including fan members driven by the rotary receptacle for passing cooling air upwardly through said casing and through the rotary receptacle.

11. An apparatus for cooling water, comprising a vertically disposed rotary receptacle, having openings at the top thereof for the escape of water and air laterally therefrom, a casing surrounding the rotary receptacle for catching the water leaving said escape openings, means for delivering hot water to the receptacle, projections on the inside of the casing for comminuting the water passing therethrough, and means for passing air through both the rotary receptacle and the casing for cooling the water.

12. An apparatus for cooling water, comprising a vertically disposed rotary receptacle having escape openings at the top, means for feeding hot water into the lower end of the receptacle, means to rotate the receptacle whereby the water spreads on the inside of the rotary receptacle in a body growing progressively thinner and eventually discharging laterally through the escape openings, a casing surrounding the rotary receptacle for catching the water leaving the rotary receptacle, projections on the inside of the casing for comminuting water passing through the casing, and means for passing air upwardly through the rotary receptacle and the casing.

13. An apparatus for cooling water, comprising a vertically disposed rotary receptacle, axially disposed means for delivering hot water into the lower part of the rotary receptacle, the rotary receptacle having escape openings for water at the top thereof for the discharge of water laterally therefrom, a casing surrounding the rotary receptacle for catching the water leaving said escape openings, projections on the inside of the casing for comminuting water passing through the casing, and means for passing air longitudinally through said casing and receptacle.

14. An apparatus for cooling water, comprising a vertically disposed rotary receptacle having openings at the top for the escape of water and air laterally therefrom, a casing around the rotary receptacle for catching the water leaving said escape openings, axially disposed means for leading hot water into the lower part of the rotary receptacle, projections on the inside of the casing for comminuting water passing through the casing, means for leading cooling air into the lower part of the rotary receptacle, and means for passing cooling air upwardly through said casing and through the rotary receptacle.

In testimony whereof I hereunto affix my signature.

KARL DÜNKELBERG.