Jan. 31, 1967 J. T. COGHILL 3,301,214

PAPER MACHINERY COATING DOCTOR BLADE BACKS

Filed March 10, 1964 2 Sheets-Sheet 1

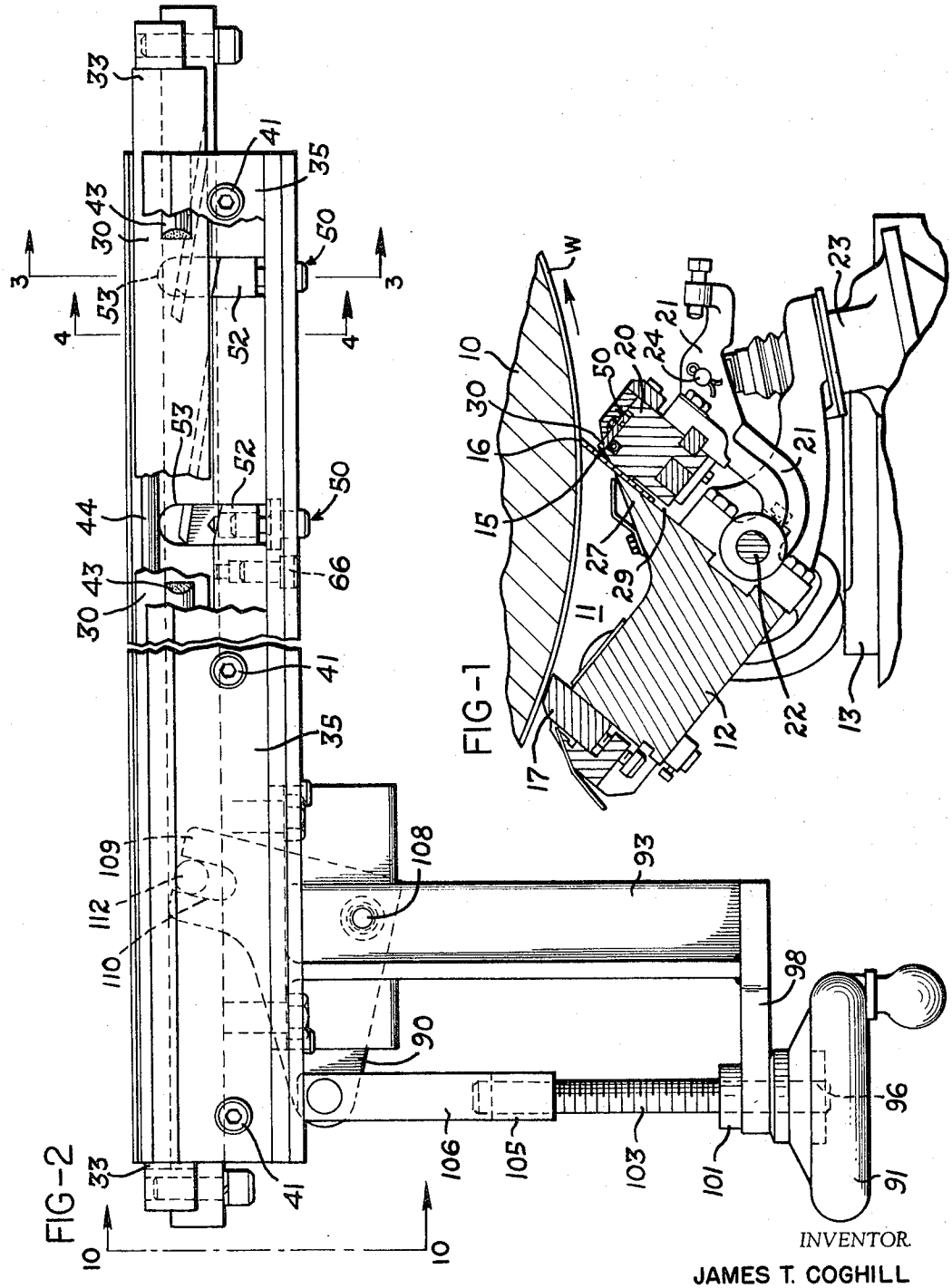

FIG-1

FIG-2

INVENTOR.
JAMES T. COGHILL
BY
Marshall, Bibel, French & Bugg
ATTORNEYS

Jan. 31, 1967 J. T. COGHILL 3,301,214

PAPER MACHINERY COATING DOCTOR BLADE BACKS

Filed March 10, 1964 2 Sheets-Sheet 2

FIG-3

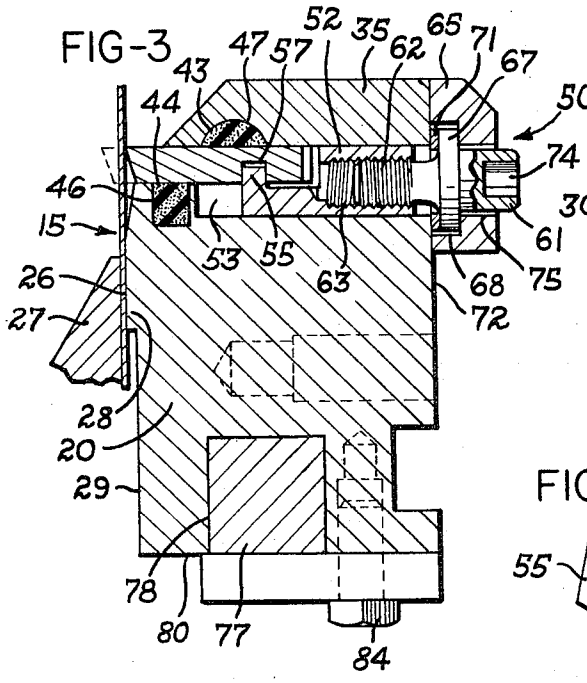

FIG-4

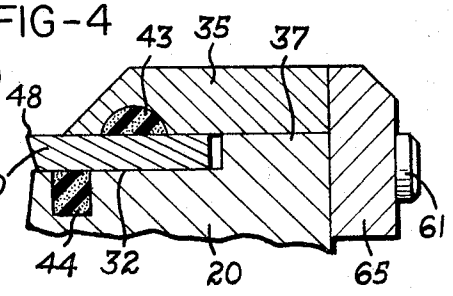

FIG-5

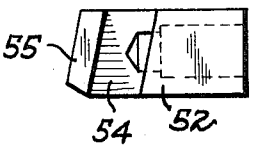

FIG-6

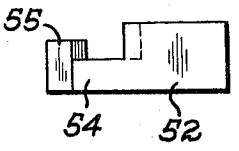

FIG-7

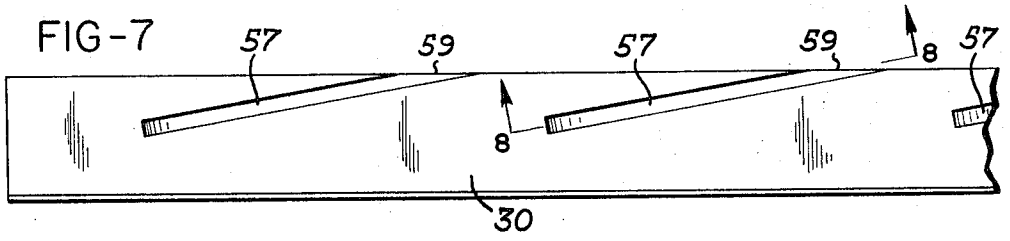

FIG-8

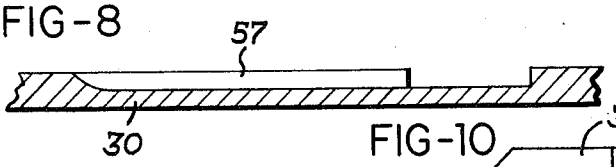

FIG-9

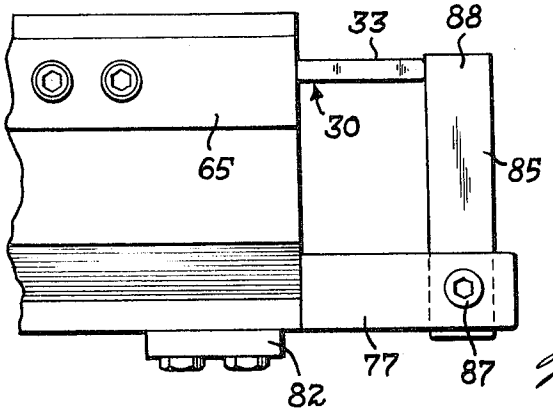

FIG-10

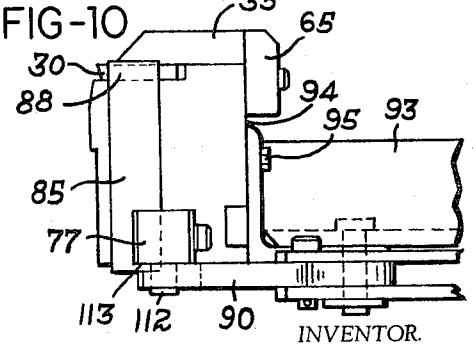

INVENTOR.

JAMES T. COGHILL

BY

Marschal, Biebel, French & Bugg

ATTORNEYS

United States Patent Office 3,301,214 Patented Jan. 31, 1967

3,301,214

PAPER MACHINERY COATING DOCTOR BLADE BACKS

James T. Coghill, Rochester, N.Y., assignor to The Black Clawson Company, Hamilton, Ohio, a corporation of Ohio

Filed Mar. 10, 1964, Ser. No. 350,910
8 Claims. (Cl. 118—126)

This invention relates to apparatus for coating paper and other web materials.

More specifically, the invention is directed to coating apparatus of the type which includes a backing roll or surface for supporting one side of a moving web which has had a coating applied to the other side thereof, and a flexible doctor blade which engages the coated surface of the web as it moves the backing roll during operation of the apparatus. In particular, the invention is related to the coating apparatus of the type disclosed in the copending application of James T. Coghill, Serial No. 136,367, filed September 6, 1961, now Patent No. 3,131,-092, issued April 28, 1964, hereinafter designated as Case A, and assigned to the assignee of this application.

Numerous expedients are presently being employed to vary locally the pressure exerted by a flexible doctor blade on a coated web to compensate for wear and stressing of the blade and other components of the machinery, non-uniformity of the backing roll, and other factors which cause an irregular coating on the web. These adjustments are for the most part inherent characteristics of the particular coating apparatus and do not vary substantially from day to day between different runs. However, with present machinery it is quite difficult and time consuming to effect in addition to the local adjustments, a uniform adjustment of the pressure exerted by the doctor blade, for example, in order to vary the coating thickness.

Accordingly, an important object of the present invention is to provide an arrangement for mounting a flexible doctor blade wherein the blade can be locally adjusted along its length to achieve a uniform coating, and further to provide apparatus for adjusting the blade uniformly with respect to the backing roll subsequent to the local adjustments for evenly varying the pressure of the blade on the coated surface without disturbing the relative positions of the local adjustments.

Another object of this invention is to provide web coating apparatus of the blade type wherein the working pressure of the blade against the web can be readily adjusted during the coating operation, and particularly to provide such apparatus wherein the adjustments may be effected uniformly across the entire width of the web or may be made selectively in localized areas along the web width.

A further object of the invention is to provide improved apparatus for mounting a flexible blade on a coating machine which allows the blade to be quickly and easily replaced without affecting other adjustments of the machine, and further to provide such apparatus including a minimum number of operative components which cooperate for simple and reliable movement to effect both local and uniform adjustments.

Other objects and advantages of the invention will be apparent from the following description, the accompanying drawings and the appended claims.

In the drawings:

FIG. 1 is a fragmentary view, partly in side elevation and partly in vertical section, illustrating the coating chamber and associated backing roll of the coating apparatus in accordance with the invention;

FIG. 2 is a plan view of the adjusting mechanism in accordance with the invention;

FIG. 3 is a sectional view taken essentially along the line 3—3 of FIG. 2;

FIG. 4 is a sectional view similar to FIG. 3 and taken essentially along the line 4—4 of FIG. 2;

FIG. 5 is a top view of the actuator slide;

FIG. 6 is a side view of the slide shown in FIG. 5;

FIG. 7 is a bottom view of the semi-rigid pressure bar;

FIG. 8 is a sectional view taken essentially along the line 8—8 of Fig. 6;

FIG. 9 is an elevation view of one end of the apparatus shown in FIG. 2; and

FIG. 10 is an end view taken essentially along the line 10—10 of FIG. 2.

Referring to the drawings, which illustrate a preferred embodiment of the invention, FIG. 1 shows fragmentarily some of the parts of the coating apparatus in accordance with Case A, including the backing roll 10 and the coating chamber 11 which is adapted to be filled with the coating material under pressure. The coating chamber 11 is formed in trough member 12 mounted on a frame 13 for raising and lowering movements with respect to the roll 10, for example, in a manner similar to that disclosed in the United States Patent No. 3,079,889, issued March 5, 1963.

The front wall of the chamber 11 is formed by a flexible blade 15 having a front edge 16 which engages the surface of the web W and doctors the coating thereon as the web rotates with the roll 10. A running seal 17 on the back wall of the chamber 11 is utilized to prevent leakage between the back side of the pressurized chamber 11 and web W. While the present invention is described in connection with a particular type of fountain coater, it is not so restricted and can be used with other types of coating apparatus.

The support for the blade 15 includes a blade holder bar 20 which is substantially coextensive with the coating chamber 11 and is secured to a hinge member 21 pivotally mounted on the member 12 by a shaft 22. An actuator 23 is connected by a pin 24 to the hinge member 21 and is capable of rotating the holder bar 20 between an advanced position, as shown in FIG. 1, and a retracted position wherein the holder bar 20 is moved with the hinge member 21 about the pin 22 to a position spaced from the chamber 11. Normally, however, the holder bar 20 is held in the advanced position and is retracted only when it is desired to replace the blade 15 or to carry out other maintenance operations on the coating apparatus.

In assembling this apparatus, the blade is first properly aligned with respect to the holder bar 20 by appropriate methods, e.g., that disclosed in the copending United States application of James T. Coghill, Serial No. 58,080, filed September 23, 1960, and assigned to the assignee of this invention. Subsequent to the blade alignment, the back edge 26 of the blade 15 is clamped between the forward lip 27 of the member 12 and the raised shoulder 28 on the side wall 29 of the holder bar 20 by operating the actuator 23 to move the holder bar to the advanced position shown in FIGS. 1 and 3.

In the operating position of the coating chamber 11 as shown in FIG. 1, the front edge 16 of the blade 15 is pressed yieldingly against the surface of the web W on the roll 10 by a semi-rigid pressure bar 30 which is mounted on the upper surface 32 of the holder bar 20. This pressure bar is somewhat longer than the holder bar 20, as indicated in FIG. 2, so that the ends 33 thereof overhang the holder bar 20. The pressure bar 30 is used for creating localized pressure variation along the length of the blade 15 to vary the pressure exerted thereby, as well as for uniform adjustment of the pressure exerted by the blade without disturbing the relative local adjustment thereof, as will be explained.

The pressure bar 30 is moved toward and away from the blade 15 guided by the cover plate 35 which is partially superimposed over the bar 30 as seen in FIGS. 3 and 4. The plate 35 which is secured to the step 37 (FIG. 4) at the rear portion of the top surface 32 of the holder bar 23 by bolts 41 (FIG. 2), resists any substantial deformation of the pressure bar 30 in a direction perpendicular to the top surface 32 of the holder bar 20. The upper and lower packings 43 and 44 are provided in the grooves 46 and 47 of the holder 20 and cover bars 35, respectively, for blocking the flow of coating and other foreign materials between these structural components.

The pressure bar 30 is preferably constructed of half-hard brass stock which has been cold drawn and selected for straightness, since this material is sufficiently flexible so that slight localized adjustments may be imparted thereto as will be described. However, other materials, such as aluminum and certain iron alloys, can be used without departing from the scope of the invention. The forward portion of the pressure bar 30 is tapered to define an edge 48 which forms the line of contact with the blade 15.

The adjuster assemblies 50 (FIGS. 2 and 3) are used to effect localized deformation of the pressure bar 30 and are positioned at spaced intervals along the length of the holder bar as shown in FIG. 2. Each of these assemblies includes a slide or dog member 52 which reciprocates in the groove 53 formed at the top surface 32 of the holder bar 20 perpendicular to the flexible blade 15. Each groove 53 is of a depth equal to the vertical thickness of the slide 52 so that the cover bar 35 aids in guiding the reciprocation thereof. The legs 54 on the innermost end of each slide 52 has an upstanding projection 55 thereon which is received in a groove 57 formed in the under surface of the pressure bar 30. Each of the cam slots 57 is disposed at a slight angle *a* to the blade 15, e.g., approximately 10°, for purposes to be described hereinafter, and the projection 55 on each slide 52 is similarly slanted in order to fit snugly therein without looseness. The cam slots 57 extend to the edge 59 thereof to facilitate machining.

The slide members 52 are reciprocated by adjusting screws 61 which have a threaded portion 62 thereon in engagement with suitably tapped bore 63 in the main body of the slide members. The screws 61 are held in position against axial movement by the elongated back plate 65 which is coextensive with the holder bar 20 and secured thereto at spaced intervals by the screws 66 (FIG. 2). The annular flange 67 provided intermediate the ends of each screw 61 is received in one of the counterbores 68 in the back plate 65, and the packing 71 is interposed between the adjacent side 72 of the holder bar 20 and the flanges 67 for holding the screws 61 against axial movement while permitting rotation thereof.

Rotation of screws 61 is accomplished by engaging a suitable wrench into the hexagonal opening 74 in the head of each screw 61 which extends through the adjacent aperture 75 in the back plate 65. Upon rotation of the screws 61, the engagement between the threaded portion 62 and the slide members 52 causes reciprocation of the latter toward or away from the blade 15 to effect local deformation of the pressure bar 30 in a direction perpendicular to the blade 15 to compensate for the factors which cause a non-uniform coating.

As noted, the adjuster assemblies 50 are positioned at spaced intervals along the holder bar 20, with the precise distance being governed by the rigidity of the pressure bar and the amount of local adjustment which may be required. It has been found that when the pressure bar 30 is half-hard brass, one-fourth inch thick, and approximately one and one-fourth inches in depth, adjuster assemblies spaced four inches apart will adequately provide the necessary adjustment, which is usually a maximum of one-fourth inch. These figures are mentioned only for the purpose of providing an example, and are not intended to limit the scope of the invention in any manner.

The cam slots 57 in the pressure bar 30 and the upstanding projections 55 on the slides 52 cooperate to effect a uniform movement of the pressure bar toward and away from the blade 15 without disturbing the local adjustments. Sliding of the pressure bar 30 in a direction parallel to the blade 15 produces a cam action between the slots 57 and projections 55 causing the pressure bar 30 to be moved perpendicularly to the blade 15. The mechanism provided for sliding the bar 30 includes an elongated slide bar 77 which reciprocates in the groove 78 in the bottom surface 80 of the holder bar 30, and it is held therein by a plurality of retainer plates 82 which are secured at spaced intervals therealong by suitable fastening means 84.

As indicated in FIG. 2, the slide bar 77 is somewhat longer than the holder and pressure bars 20 and 30 so that a portion thereof projects beyond each end of these bars, and an upstanding end bar 85 is secured to the grooves 86 in the overhanging ends of the slide bar 77 by the screws 87. The distance between these end bars 85 is substantially identical to the length of the pressure bar 30, so that the upper portion 88 thereof engages the ends 33 of the pressure bar 30, as shown in FIGS. 2 and 9. Consequently, reciprocation of the slide bar 77 also effects parallel movement of the pressure bar 30, and since the end bars 85 are not rigidly connected to the pressure bar 30, the latter may be moved toward and away from the flexible doctor blade 15 by the adjuster assemblies 50.

The slide bar 77 is reciprocated by the bell crank lever 90 (FIGS. 2 and 9) which is actuated by the rotation of the hand wheel 91 mounted on the bracket 93 secured to the side 94 of the holder bar 30 by the screws 95. Specifically, the hand crank 91 is mounted for rotation on the shaft 96 which extends through and is supported by the arm 98 of the bracket 93, and the shaft 96 is held against axial movement by the wheel 91 on one side of the arm 98 and the collar 101 on the other, since both the wheel and collar are secured to the shaft 96. The threaded portion 103 of this shaft engages a similarly threaded member 105 rigidly secured to the clevis 106 so that rotation of the hand wheel 91 effects reciprocal movement of the clevis 106.

The clevis 106 is pivotally secured to the lever 90 which rotates on the bracket 93 about the pivot pin 108 so that reciprocal movement of the clevis 106 effects rotary movement of the lever 90. The other end 109 of the lever 90 has an elongated slot 110 therein which receives a bearing pin 112 rigidly secured to the lower surface 113 of the slide bar 77 so that rotation of the lever 90 effects reciprocation of the slide bar 77 in the groove 78. The limits of movement of the slide bar 77 are controlled by the end bars 85 which engage the ends of the holder bar 20 at the extremes of travel thereof.

In operation, after the blade 15 has been clamped in place and the member 12 moved into operational relationship with the backing roll 10, the individual assemblies 50 are utilized to correct for distortion, wear, and other factors which cause a non-uniform coating. Thus a wrench is utilized to rotate screws 61 and reciprocate the slides 52 to deform the semi-rigid pressure bar 30. Only a small amount of local adjustment is generally required, that is, a maximum travel of one-fourth inch is usually provided, so that these adjuster assemblies are capable of deforming the semi-rigid bar 30 in a direction perpendicular to the blade 15 to compensate for the coating non-uniformity.

The engagement between the projections 55 on the slides 52 and the cam slots 57 prevents movement toward and away from the blades except as effected by rotation of the screws 61 so that, while one assembly 50 is ad-

justed, the other assemblies hold the blade securely in position. Similarly, there is no tendency of the blade to be cammed sideways by movement of the projections **55** with the slide members **52** since the shaft **96** and the linkage associated therewith effectively resist such movement by locking the lever **90** against movement except by the hand-wheel **91**.

When it is desired to adjust the pressure exerted by the blade **15** on the web W uniformly without affecting the localized adjustments, the crank **91** is rotated in the appropriate direction to pivot the lever **90** and move the slide bar **77** in a direction parallel to the pressure bar **33**. Since the end bars **85** contact the opposite ends of the pressure bar **33**, the latter is also moved in a direction parallel to the blade **15**, and the cooperation between the projections **55** and the cam slots **57** causes the pressure bar **30** to move in a direction toward or away from the blade **15** to vary the pressure exerted thereon. This is accomplished without changing or in any way disturbing the local setting of the assemblies **50** so that after the uniform pressure adjustment is made, the local adjustments remain substantially intact.

Thus the invention has provided a novel arrangement for locally compensating for non-uniformity in pressure exertd by a doctor blade on a coated web, as well as apparatus for uniformly varying this pressure. The two separate adjustments are substantially independent in operation, and the setting of one does not affect the setting of the other. Moreover, it is within the scope of this invention to utilize either of these adjustments without the other, although the preferred embodiment utilizes both as described above.

While the form of the apparatus herein described constitutes a preferred embodiment of the invention, it is to be understood that the invention is not limited to this precise form of apparatus, and that changes may be made therein without departing from the scope of the invention which is defined in the appended claims.

What is claimed is:

1. In apparatus for coating one side of a moving web including a backing roll adapted to support the other side of the web and a flexible blade adapted to engage the web against the roll, the combination of a holder bar for said blade, means for securing the back edge of the blade with respect to said bar and with the front edge of the blade projecting beyond said bar, means including an elongated semi-rigid bar mounted on said holder bar parallel to the blade for movement toward and away from the blade, a plurality of individual assemblies mounted on said holder bar for applying pressure to said semi-rigid bar to deform said semi-rigid bar selectively and urge the front edge thereof against the blade for localized adjustment of the pressure between the blade and the roll, and means for moving said semi-rigid bar toward and away from the blade without altering the position of said individual assemblies.

2. In apparatus for coating one side of a moving web including a backing roll adapted to support the other side of the web and a flexible blade adapted to engage the web against the roll, the combination of a holder bar for said blade, means for securing the back edge of the blade with respect to said bar and with the front edge of the blade projecting beyond said bar, means including an elongated semi-rigid bar mounted on said holder bar parallel to the blade for movement toward and away from the blade, a plurality of individual assemblies mounted on said holder bar for applying pressure to said semi-rigid bar to deform said semi-rigid bar selectively and urge the front edge thereof against the blade for localized adjustment of the pressure between the blade and the roll, means defining at least two cam grooves in said semi-rigid bar having one end closer to the blade than the other, cam follower means on said holder bar engaging each of said cam grooves, and actuator means for moving said semi-rigid bar parallel to the blade to effect a cam action between said groove and said follower means and thereby to move said semi-rigid bar toward and away from the blade without altering the position of said individual assemblies.

3. In apparatus for coating one side of a moving web including a backing roll adapted to support the other side of the web and a flexible blade adapted to engage the web against the roll, the combination of a holder bar for said blade, means for securing the back edge of the blade with respect to said bar and with the front edge of the blade projecting beyond the upper surface of said bar, an elongated semi-rigid bar mounted on said upper surface of said holder bar parallel to the blade for movement toward and away from the blade to apply pressure to the blade, a rigid cover member secured to said holder bar above said semi-rigid bar for guiding the movement of said semi-rigid bar and resisting deformation thereof in a direction perpendicular to said upper surface, and a plurality of individual assemblies mounted on said holder bar at spaced intervals along the length thereof for applying pressure to said semi-rigid bar to deform said semi-rigid bar along its length selectively and urge the front edge thereof against the blade for localized adjustment of the pressure engagement between the blade and the roll.

4. In apparatus for coating one side of a moving web including a backing roll adapted to support the other side of the web and a flexible blade adapted to engage the web against the roll, the combination of a holder bar for said blade, means for securing the back edge of the blade with respect to said bar and with the front edge of the blade projecting beyond the upper surface of said bar, an elongated semi-rigid bar mounted on said upper surface of said holder bar parallel to the blade for movement toward and away from the blade, said holder bar having a plurality of grooves in said upper surface thereof at spaced intervals perpendicular to the blade, a rigid cover member secured to said holder bar above said semi-rigid bar for guiding the movement of said semi-rigid bar and resisting deformation thereof in a direction perpendicular to said upper surface, said semi-rigid bar and said cover member cooperating to enclose said grooves, and an individual adjuster assembly mounted in each of said grooves for applying pressure to said semi-rigid bar to deform said semi-rigid bar selectively along its length and to urge the front edge thereof against the blade for localized adjustment of the pressure engagement between the blade and the roll.

5. In apparatus for coating one side of a moving web including a backing surface adapted to support the other side of the web and a flexible blade adapted to engage the web against the backing surface, the combination of a holder bar for the blade, means for securing the back edge of the blade with respect to said bar with the front edge of the blade projecting beyond said bar, a semi-rigid pressure bar mounted on said holder bar parallel to the blade for movement toward and away from the front edge of the blade to effect variation in the pressure exerted by the blade on the web and backing surface, a plurality of individual assemblies mounted on said holder bar for effecting localized deformation of said semi-rigid bar to cause correspondingly localized adjustment in the pressure exerted by the blade, each of said assemblies including cam groove means in said pressure bar which is slanted with respect to the blade, a reciprocable slide member having a projection received in said groove, means for guiding movement of said slide member toward and away from the blade to effect localized deformation of said pressure bar, and means for moving said pressure bar parallel to the blade to cause said projections in said cam groove means to move said pressure bar toward and away from said blade without substantially changing the localized deformation of said pressure bar.

6. In apparatus for coating one side of a moving web

including a backing surface adapted to support the other side of the web and a flexible blade adapted to engage the web against the backing surface, the combination of a holder bar for the blade, means for securing the back edge of the blade with respect to said bar and with the front edge of the blade projecting beyond said bar, a pressure bar mounted on said holder bar parallel to the blade for movement toward and away from the front edge of the blade to effect variation in the pressure exerted by the blade on the web and backing surface, adjustment means mounted on said holder bar for effecting uniform movement of the pressure bar toward and away from the blade to vary the pressure exerted thereby, said adjustment means including a plurality of cam groove means in said pressure bar which are slanted with respect to the blade, a projection on said holder bar for engagement with each of said slots, and means for moving said pressure bar parallel to the blade to cause said projections in said groove means to move said pressure bar uniformly toward and away from the blade.

7. In apparatus for coating one side of a moving web including a backing surface adapted to support the other side of the web and a flexible blade adapted to engage the web against the backing surface, the combination of a holder bar for the blade, means for securing the back edge of the blade with respect to said bar with the front portion of the blade projecting beyond said bar, a pressure bar mounted on said holder bar parallel to the blade for movement toward and away from engagement with the front portion of the blade to effect variation in the pressure exerted by the blade on the web and backing surface, said pressure bar being longer than said holder bar creating overhanging ends on said pressure bar, means defining a plurality of cam grooves in said pressure bar which are slanted with respect to the blade, a plurality of projections on said holder bar for engagement with said grooves, and actuator means for moving said pressure bar parallel to the blade to cause said projections in said grooves to cam said pressure bar uniformly toward and away from the blade, said actuator means including a rigid actuator bar reciprocably mounted on said holder bar and having members on the ends thereof in contact with the opposite ends of said pressure bar to move said pressure bar parallel to the blade without obstructing movement of said pressure bar toward and away from the blade.

8. In apparatus for coating one side of a moving web including a backing surface adapted to support the other side of the web and a flexible blade adapted to engage the web against the backing surface, the combination of a holder bar for the blade, means for securing the back edge of the blade with respect to said bar with the front edge of the blade projecting beyond said bar, a semi-rigid pressure bar mounted on said holder bar parallel to the blade for movement toward and away from the front edge of the blade to effect variation in the pressure exerted by the blade on the web and backing surface, a plurality of individual assemblies mounted on said holder bar for effecting localized deformation of said pressure bar to compensate for factors which cause an uneven coating, each of said assemblies including cam groove means in said pressure bar which are slanted with respect to the blade, a reciprocable slide member having a projection which is received in said cam groove means, means for guiding movement of said slide member toward and away from the blade, screw means for separately moving said slide members toward and away from said blade to deform said pressure bar locally to vary the pressure exerted by the blade on the roll, and means for moving said pressure bar parallel to the blade to cause said projections in said cam groove means to move said pressure bar toward and away from said blade without substantially changing the localized deformation of said pressure bar.

References Cited by the Examiner

UNITED STATES PATENTS

3,164,492 1/1965 Schmitt et al. ___ 15—256.51 X

CHARLES A. WILLMUTH, *Primary Examiner.*

L. G. MACKLIN, *Assistant Examiner.*