(19) Oifig Maoine Intleachtúla na hÉireann
Intellectual Property Office of Ireland

(11) **IE S87521** (13) **Y1**

(43) Date of Publication of Grant:
31.07.2024 Journal No. 2521

(12) IRISH SHORT-TERM PATENT SPECIFICATION

(54) Title of Invention: **GRINDING EQUIPMENT IN ADDITIVE MANUFACTURING**

(51) Int. Cl. (2024.01)
B22F 12/00

(21) Application Number: **20230139**

(22) Date of Filing: **05.05.2023**

(43) Date of publication of application:
31.07.2024 Journal No. 2521

(30) Priority data: **CN 01.11.2022 2022113553286**

(72) Inventor(s):
LI CONG
ZHANG QUANQUAN
REN YANJIE
ZHOU LIBO
CHEN WEI
CHEN JIAN

(73) Proprietor(s):
CHANGSHA UNIVERSITY OF SCIENCE AND TECHNOLOGY
No. 45, Chiling Road, Tianxin District
410114 Changsha City, Hunan Province
China

(74) Agent and/or Address for Service:
Valet Patent Services Limited
c/o Caya 83713X
Am Börstig 5
96052 Bamberg
Germany

GRINDING EQUIPMENT IN ADDITIVE MANUFACTURING

TECHNICAL FIELD

The invention relates to the technical field of additive manufacturing, in particular to grinding equipment in additive manufacturing.

BACKGROUND

Additive Manufacturing (AM) technology is a technology of manufacturing solid parts by gradually accumulating materials. Compared with traditional material removal-cutting technology, AM technology does not need traditional tools, fixtures and multiple processing procedures, and can quickly and accurately manufacture parts with any complex shape on one device, thus realizing "free manufacturing" of parts, solving the forming of many parts with complex structures, greatly reducing the processing procedures and shortening the processing cycle. Moreover, the more complex the product structure, the more significant the role of its manufacturing speed.

In the process of additive manufacturing, due to the use of laser melting, spraying and other means to add materials, the surface and edge flatness of the new part is poor, and there are problems such as burrs, which need to be ground to improve the quality. However, the existing grinding equipment can only grind in the horizontal or vertical direction, and the degree of freedom of grinding is poor. When grinding the workpiece manufactured by additive, it cannot meet the grinding requirements of the complex shape of the workpiece. Therefore, it is urgent to design a grinding equipment in additive manufacturing to solve the above technical

problems.

SUMMARY

The purpose of the invention is to provide grinding equipment in additive manufacturing, so as to solve the problems existing in the prior art.

In order to achieve the above purpose, the present invention provides the following scheme: the present invention provides grinding equipment in additive manufacturing, including:

the workbench, which is fixedly provided with a clamping component, and the clamping component is used for fixing a workpiece;

the dust collecting mechanism, which is arranged in the inner cavity of the workbench and is communicated with the top surface of the workbench; the dust collecting mechanism comprises a cleaning component rotatably connected to the inner cavity of the workbench, and the cleaning component is obliquely arranged; the lower part of the cleaning component is in sliding contact with a separation net;

the supporting mechanism, which comprises two upright posts which are symmetrically and slidably connected to the top surface of the workbench, the opposite surfaces of the two upright posts are respectively and slidably connected with adjusting components, and a mounting rod is rotatably connected between the two adjusting components;

the grinding mechanism, which is slidably connected to the bottom end of the mounting rod, and the grinding mechanism is detachably connected with the workpiece.

Preferably, the adjusting component comprises a first slider connected to the side wall of the upright posts in a longitudinal sliding manner, and a first motor is mounted on one side of the first sliders facing the workpiece, and the output shaft of the first motor is connected with an adjusting piece in a transmission way, and the mounting rod is rotatably connected between the two adjusting pieces; the adjusting piece comprises a U-shaped adjusting frame, and the opening of the adjusting frame faces the output end of the first motor; the bottom end of the inner cavity of the adjusting frame is penetrated with an adjusting groove, and the output shaft of the first motor is slidably connected with the adjusting groove; any side wall of the inner cavity of the adjusting frame is fixedly connected with a rack, and the rack is meshed with an adjusting gear which is sleeved on the output shaft of the first motor and detachably connected with the first motor; an adjusting block is rotatably sleeved on the output shaft of the first motor, and the adjusting block is abutted with the first motor; the outer wall of the adjusting block is rectangular and is matched with the adjusting groove; the adjusting block is slidably connected in the adjusting groove.

Preferably, the bottom end of the mounting rod is provided with an upward mounting groove, a second motor is mounted on one side of the mounting groove, an output shaft of the second motor is connected with a mounting screw in a transmission way, a mounting block is connected with the mounting screw in a threaded way, the mounting block is in slidably connected with the mounting groove, and the grinding mechanism is mounted at the bottom end of the mounting block; the grinding mechanism comprises a grinding motor installed at the bottom end of the mounting

block, and the output shaft of the grinding motor faces the workpiece and is detachably connected with a grinding head. The output shaft of the grinding motor is fixedly connected with a connecting rod, the bottom end of the connecting rod is provided with a connecting hole, a grinding rod is detachably connected in the connecting hole, and the bottom end of the grinding rod extends out of the connecting hole and is fixedly connected with the top end of the grinding head; the side wall of the connecting hole is provided with a plurality of fasteners, one end of each fastener is detachably connected with the grinding rod, and the other end of each fastener extends out of the connecting rod and is detachably connected with a locking nut, and the locking nut is threadedly connected with the outer wall of the connecting rod.

Preferably, the fastener comprises a jacking hole arranged on the side wall of the connecting rod, and the jacking hole is communicated with the connecting hole; a jacking rod is slidably connected in the jacking hole, and one end of the jacking rod facing the grinding rod is fixedly connected with a ball head, and the ball head is detachably connected with an annular groove on the side wall of the grinding rod; the other end of the jacking rod is fixedly connected with a pushing block, and the pushing block extends out of the jacking hole and is detachably connected with the locking nut; a return spring is fixedly connected between the pushing block and the jacking hole, and the return spring is sleeved outside the jacking rod. The top end of the grinding rod is fixedly connected with a first permanent magnet, and the first permanent magnet is connected with a second permanent magnet by attraction, and the second permanent magnet is fixedly connected with the top end of the connecting

hole through a connecting spring.

Preferably, the cleaning component comprises a driving shaft and a driven shaft rotatably connected to the inner cavity of the workbench, one end of the driving shaft extends out of the workbench and is connected with a cleaning motor in a transmission way, and the cleaning motor is installed on the side wall of the workbench; the driving shaft is sleeved with two symmetrically arranged driving wheels, the driven shaft is sleeved with two symmetrically arranged driven wheels, and the correspondingly arranged driving wheels are in transmission connection with the driven wheels through a transmission belt; the outer wall of the transmission belt is fixedly connected with a plurality of cleaning blocks, a cleaning rod is fixedly connected between two corresponding cleaning blocks, a plurality of cleaning bristles are fixedly connected to one side of the cleaning rod far from the transmission belt, and the tail ends of the cleaning bristles are in sliding contact with the separation net. The separation net is obliquely arranged and parallel to the transmission belt; the side wall of the workbench corresponding to the bottom end of the separation net is provided with a dust outlet, the outer wall of the workbench is detachably connected with a dust collecting box, and the dust outlet is communicated with the inside of the dust collecting box.

The invention discloses that following technical effect: the invention discloses grinding equipment in additive manufacturing, which is mainly use for solving the problem that the existing grinding equipment has less grinding freedom and cannot meet the grinding requirements of complex lines on the surface of workpieces

manufactured by additive manufacturing. The workbench is used to support the whole grinding equipment, and the clamping component on the workbench is used to clamp the workpiece to be ground. The dust collecting mechanism is used to collect the dust and material waste generated in the grinding process, so as to prevent the impact of the scattered floating of the material waste and dust on the working environment, and at the same time prevent the grinding surface from scratching caused by the dust and waste, which is beneficial to improving the grinding quality. The reduction of dust and waste chips also reduces the accumulation on the equipment, dust and ash accumulation on the equipment, and movement wear caused by waste chips entering the moving parts of the equipment, thus improving the service life of the equipment. The supporting mechanism is used to support the grinding mechanism to adjust at any angle in the space of the working area, which improves the degree of freedom of grinding and meets the grinding requirements for complex structures and lines on the workpiece surface. The cleaning component in the dust collecting mechanism is used to clean the surface of the separation net, clean and collect the separated dust and waste chips, and prevent the separation net from being blocked. The invention improves the freedom of grinding, reduces the grinding dead angle of the workpiece, meets the grinding requirements of complex shapes and lines on the surface of the workpiece, and improves the grinding quality of the workpiece.

BRIEF DESCRIPTION OF THE FIGURES

In order to explain the embodiments of the present invention or the technical scheme in the prior art more clearly, the drawings needed in the embodiments will be

briefly introduced below. Obviously, the drawings described below are only some embodiments of the present invention, and other drawings can be obtained according to these drawings without creative work for ordinary people in the field.

Fig. 1 is a schematic structural diagram of grinding equipment in additive manufacturing of the present invention;

Fig. 2 is a schematic structural diagram of the grinding head of the present invention;

Fig. 3 is a partial enlarged view of A in Fig. 2;

Fig. 4 is a schematic structural diagram of the mounting rod of the present invention;

Fig. 5 is a partial sectional view of B in Fig. 1 of the present invention;

Fig. 6 is a partial sectional view of C in Fig. 1 according to the present invention;

Fig. 7 is a side view of the adjusting piece of the present invention;

Fig. 8 is a schematic structural diagram of the adjusting gear of the present invention;

Fig. 9 is a schematic diagram of the top structure of the cleaning component of the present invention;

Fig. 10 is a schematic view of the top structure of the adjusting frame of the present invention;

Among them, 1. workbench; 2. workpiece; 3. dust collecting mechanism; 4. supporting mechanism; 5. grinding mechanism; 11. base; 12. hydraulic cylinder; 13. fixed plate; 14. mounting cavity; 15. third motor; 16. second gear; 17. gear ring; 31.

separation net; 32. driving shaft; 33. driven shaft; 34. cleaning motor; 35. driving wheel; 36. driven wheel; 37. transmission belt; 38, cleaning rod; 39. cleaning bristle; 310. dust outlet; 311, dust collecting box; 312, exhaust cavity; 313, dust collecting hole; 314, exhaust fan; 315, cleaning block; 41. upright post; 42. mounting rod; 43. first slider; 44. first motor; 45. adjusting frame; 46. adjusting groove; 47. rack; 48, adjusting gear; 49. adjusting block; 410, piezoelectric ceramic ring; 411. mounting groove; 412, second motor; 413, mounting screw; 414. mounting block; 51, grinding motor; 52, grinding head; 53. connecting rod; 54. connecting hole; 55, grinding rod; 56. locking nut; 57, jacking hole; 58, jacking rod; 59. ball head; 510. annular groove; 511. pushing block; 512, return spring; 513. first permanent magnet; 514. second permanent magnet; 515, connecting spring.

DESCRIPTION OF THE INVENTION

In the following, the technical scheme in the embodiment of the invention will be clearly and completely described with reference to the attached drawings. Obviously, the described embodiment is only a part of the embodiment of the invention, but not the whole embodiment. Based on the embodiments in the present invention, all other embodiments obtained by ordinary technicians in the field without creative labor belong to the scope of protection of the present invention.

In order to make the above objects, features and advantages of the present invention more obvious and easier to understand, the present invention will be further described in detail with the attached drawings and specific embodiments.

Refer to Figs. 1-10, that present invention provides grinding equipment in

additive manufacturing, which comprises:

a workbench 1, which is fixedly installed with a clamping component, and the clamping component is used for fixing a workpiece 2;

a dust collecting mechanism 3, which is arranged in the inner cavity of the workbench 1 and communicated with the top surface of the workbench 1; the dust collecting mechanism 3 comprises a cleaning component rotatably connected to the inner cavity of the workbench 1, and the cleaning component is obliquely arranged; the lower part of the cleaning component is in sliding contact with a separation net 31;

a supporting mechanism 4, which comprises two upright posts 41 symmetrically and slidably connected to the top surface of the workbench 1, where the opposite surfaces of the two upright posts 41 are respectively and slidably connected with adjusting components, and a mounting rod 42 is rotatably connected between the two adjusting components;

the grinding mechanism 5, which is slidably connected to the bottom end of the mounting rod 42, and the grinding mechanism 5 is detachably connected to the workpiece 2.

The invention discloses grinding equipment in additive manufacturing, which is mainly use for solving that problem that the existing grinding equipment has less grinding freedom and cannot meet the grinding requirements of complex lines on the surface of a workpiece 2 manufactured by additive manufacturing. The workbench 1 is used to support the whole grinding equipment, and the clamping component on the workbench 1 is used to clamp the workpiece 2 to be ground. The dust collecting

mechanism 3 is used to collect the dust and material waste generated in the grinding process, so as to prevent the impact of the scattered floating of the material waste and dust on the working environment, and at the same time prevent the grinding surface from scratching caused by the dust and waste, which is beneficial to improving the grinding quality. The reduction of dust and waste chips also reduces the accumulation on the equipment, dust and ash accumulation on the equipment, and movement wear caused by waste chips entering the moving parts of the equipment, thus improving the service life of the equipment. The supporting mechanism 4 is used to support the grinding mechanism 5 to adjust at any angle in the space of the working area, which improves the grinding freedom and meets the grinding requirements for complex structures and lines on the surface of the workpiece 2. The cleaning component in the dust collecting mechanism 3 is used for cleaning the surface of the separation net 31, cleaning and collecting the separated dust and waste chips, and preventing the separation net 31 from being blocked.

In a further optimization scheme, the adjusting component comprises a first slider 43 which is longitudinally and slidably connected to the side wall of the upright posts 41, and a first motor 44 is mounted on one side of the first slider 43 facing the workpiece 2, and the output shaft of the first motor 44 is drivingly connected with an adjusting piece, and the mounting rod 42 is rotatably connected between the two adjusting pieces. The adjusting piece comprises a U-shaped adjusting frame 45, and the opening of the adjusting frame 45 faces the output end of the first motor 44; the bottom end of the inner cavity of the adjusting frame 45 is provided with an adjusting

groove 46, and the output shaft of the first motor 44 is slidably connected with the adjusting groove 46; any side wall of the inner cavity of the adjusting frame 45 is fixedly connected with a rack 47, and the rack 47 is meshed with an adjusting gear 48, which is sleeved on the output shaft of the first motor 44 and detachably connected with the first motor 44; an adjusting block 49 is rotatably sleeved on the output shaft of the first motor 44, and the adjusting block 49 is abutted with the first motor 44; the outer wall of the adjusting block 49 is rectangular and is matched with the adjusting groove 46; the adjusting block 49 is slidably connected in the adjusting groove 46. The two upright posts 41 slide on the surface of the workbench 1 to adjust the position of the grinding mechanism 5 and improve the degree of freedom. The first motor 44 is in transmission connection with the adjusting piece, which can first drive the adjusting piece to rotate and adjust its angle. At the same time, the adjusting piece can slide on the output shaft of the first motor 44 to adjust the distance between the mounting rod 42 and the workpiece 2, thus increasing the freedom of adjustment of the mounting rod 42. When the output shaft of the first motor 44 is connected with the adjusting block 49, the first motor 44 drives the adjusting block 49 to rotate, and the adjusting block 49 and the adjusting groove 46 jointly drive the adjusting frame 45 to rotate. When the adjusting block 49 is separated from the first motor 44, the angle of the adjusting frame 45 is fixed. When the output shaft of the first motor 44 is connected with the adjusting gear 48, the adjusting gear 48 is driven to rotate, and the adjusting frame 45 is driven to slide in the direction of the adjusting groove 46 through the meshed adjusting gear 48 and the rack 47, so as to adjust the distance

between the mounting rod 42 and the workpiece 2. When the adjusting gear 48 is disconnected from the first motor 44, the distance between the mounting rod 42 and the workpiece 2 is fixed.

Further, the inner wall of the adjusting gear 48 and the inner wall of the adjusting block 49 are respectively fixedly connected with a piezoelectric ceramic ring 410, which is sleeved on the output shaft of the first motor 44 and detachably connected with the first motor 44; the piezoelectric ceramic ring 410 is deformed after being energized and reset after being de-energized, so that the adjusting gear 48 and the adjusting block 49 can rotate together with the output shaft of the first motor 44 when energized and remain stationary after being de-energized.

Further, a positioning mechanism is arranged between the adjusting frame 45 and the first motor 44, so that when the piezoelectric ceramic ring 410 is disconnected from the output shaft of the first motor 44, the adjusting frame 45 can be fixed without moving, and the stability is improved. The positioning mechanism can be realized by friction, which is the prior art and will not be described here.

According to the further optimization scheme, the bottom end of the mounting rod 42 is provided with an upward mounting groove 411, and a second motor 412 is mounted on one side of the mounting groove 411; the output shaft of the second motor 412 is connected with a mounting screw 413 in a transmission way; the mounting screw 413 is threadedly connected with a mounting block 414; the mounting block 414 is slidably connected with the mounting groove 411; and the grinding mechanism 5 is mounted at the bottom end of the mounting block 414; the

grinding mechanism 5 includes a grinding motor 51 installed at the bottom end of the mounting block 414. The output shaft of the grinding motor 51 faces the workpiece 2 and is detachably connected with a grinding head 52. The output shaft of the grinding motor 51 is fixedly connected with a connecting rod 53, the bottom end of the connecting rod 53 is provided with a connecting hole 54, and a grinding rod 55 is detachably connected in the connecting hole 54, and the bottom end of the grinding rod 55 extends out of the connecting hole 54 and is fixedly connected with the top end of the grinding head 52; the side wall of the connecting hole 54 is provided with a plurality of fasteners, one end of each fastener is detachably connected with the grinding rod 55, and the other end of the each fastener extends out of the connecting rod 53 and is detachably connected with a locking nut 56, the locking nut 56 is threadedly connected on the outer wall of the connecting rod 53. The second motor 412 drives the mounting block 414 to move through the mounting screw 413, and then drives the grinding motor 51 to move, so that the grinding head 52 can be offset and adjusted outside the workpiece 2. When installing the grinding head 52, the top end of the grinding rod 55 is inserted into the insert connecting hole 54 to align the annular groove 510 with the ball head 59, then the locking nut 56 is rotated, so that the locking nut 56 moves down, the pushing block 511 is squeezed, and then the ball head 59 is inserted into the annular groove 510 for jacking, thus completing the fixation of the grinding head 52. When the grinding head 52 is removed or replaced, the locking nut 56 is rotated upward, and the return spring 512 pushes the jacking rod 58 to return, so that the ball head 59 is separated from the annular groove 510, and the

grinding rod 55 is pulled out at this moment.

Further, the movement between the upright posts 41 and the workbench 1 and between the first slider 43 and the upright posts 41 is realized by servo motors and lead screws (not shown in the figure), and the servo motors and lead screws are conventional driving forms, which will not be described in detail here.

Further, any end of the mounting rod 42 is fixedly connected with the output shaft of a rotating motor (not shown in the figure), and the rotating motor is installed at the top end of the adjusting frame 45 to realize the rotation of the mounting rod 42, so that the grinding angle adjustment of the grinding head 52 is more flexible.

Further, the functions of the grinding head 52 include but are not limited to grinding, derusting and burnishing. Each function corresponds to a different grinding head 52, which is convenient for selection and replacement.

In a further optimization scheme, the fastener comprises a jacking hole 57 formed on the side wall of the connecting rod 53, and the jacking hole 57 is communicated with the connecting hole 54; a jacking rod 58 is slidably connected in the jacking hole 57, and one end of the jacking rod 58 facing the grinding rod 55 is fixedly connected with a ball head 59, the ball head 59 is detachably connected with an annular groove 510 on the side wall of the grinding rod 55. The other end of the jacking rod 58 is fixedly connected with a pushing block 511, the pushing block 511 extends out of the jacking hole 57 and is detachably connected with the locking nut 56. A return spring 512 is fixedly connected between the pushing block 511 and the jacking hole 57, and the return spring 512 is sleeved outside the jacking rod 58. The

top end of the grinding rod 55 is fixedly connected with a first permanent magnet 513, and the first permanent magnet 513 is connected with a second permanent magnet 514 by attraction, and the second permanent magnet 514 is fixedly connected with the top end of the connecting hole 54 through a connecting spring 515. The attraction of the first permanent magnet 513 and the second permanent magnet 514 facilitates the positioning of the grinding rod 55, and at the same time prevents the grinding rod 55 from falling during installation and disassembly, damaging the workpiece 2 or damaging the grinding head 52.

According to the further optimization scheme, the cleaning component comprises a driving shaft 32 and a driven shaft 33 which are rotatably connected in the inner cavity of the workbench 1, one end of the driving shaft 32 extends out of the workbench 1 and is connected with a cleaning motor 34 in a transmission way, and the cleaning motor 34 is installed on the side wall of the workbench 1. Two symmetrically arranged driving wheels 35 are sleeved on the driving shaft 32, and two symmetrically arranged driven wheels 36 are sleeved on the driven shaft 33, and the correspondingly arranged driving wheels 35 and driven wheels 36 are in transmission connection through a transmission belt 37.The outer wall of the transmission belt 37 is fixedly connected with a plurality of cleaning blocks 315, and a cleaning rod 38 is fixedly connected between two corresponding cleaning blocks 315. A side of the cleaning rod 38 far from the transmission belt 37 is fixedly connected with a plurality of cleaning bristles 39, and the tail ends of the cleaning bristles 39 are in sliding contact with the separation net 31. The separation net 31 is obliquely arranged and

parallel to the transmission belt 37. The side wall of the workbench 1 corresponding to the bottom end of the separation net 31 is provided with a dust outlet 310, and the outer wall of the workbench 1 is detachably connected with a dust collecting box 311, and the dust outlet 310 is communicated with the inside of the dust collecting box 311. The cleaning motor 34 drives and supports the two transmission belts 37 to rotate through the driving wheel 35 and the driven wheel 36, so that the cleaning bristles 39 brush the top end of the separation net 31, and brush the waste chips and dust to the dust outlet 310 and enter the dust collecting box 311 for convenient collection.

Further, the workbench 1 is internally provided with an exhaust cavity 312, which is located below the separation net 31, and is communicated with an exhaust fan 314. The exhaust fan 314 forms negative pressure, and sucks dust into the workbench 1 through a dust collecting hole 313 formed on the top surface of the workbench 1 to complete dust collection.

Further, the clamping component comprises a base 11 installed on the top surface of the workbench 1, and dust collecting holes 313 are distributed around the base 11; the base 11 is rotatably connected with a hydraulic cylinder 12, and the output end of the hydraulic cylinder 12 is fixedly connected with a fixed plate 13, and the workpiece 2 is clamped and installed on the fixed plate 13; the base 11 is internally provided with an mounting cavity 14, and a third motor 15 is installed in the mounting cavity 14, and the output end of the third motor 15 is fixedly connected with a second gear 16, and the second gear 16 is meshed with a gear ring 17 sleeved and fixedly connected outside the hydraulic cylinder 12; the third motor 15 drives the

hydraulic cylinder 12 to rotate through the meshed second gear 16 and gear ring 17, thereby rotating the workpiece 2; the hydraulic cylinder 12 pushes the fixed plate 13 up and down to adjust the height of the workpiece and facilitate grinding.

Use method:

the workpiece 2 to be ground is clamped on the fixed plate 13, and then adjust the height and angle of the workpiece 2. The position of the upright posts 41 and the position of the first slider 43 are adjusted by the lead screw of the servo motor, so as to adjust the position of the grinding mechanism 5.

The first motor 44 is started, the on-off of the adjusting gear 48 and the adjusting block 49 with the first motor 44 is controlled through the piezoelectric ceramic ring 410, the height and position of the top end of the mounting rod 42 is adjusted, and then the mounting rod 42 is driven through the rotating motor to adjust the angle of the grinding head 52 towards the workpiece 2 and align it with the grinding zero position set on the workpiece 2.

The grinding motor 51 is started to drive the grinding head 52 to rotate to grind the surface of the workpiece 2. During grinding, the grinding head 52 is controlled to move in the working area to grind the surface of the workpiece.

When it is necessary to replace the grinding head 52, the locking nut 56 is loosen to replace grinding head 52, a new grinding head 52 is inserted and then the locking nut 56 is screwed again.

In the description of the present invention, it should be noted that the orientation or position relationships indicated by the terms "longitudinal", "transverse", "upper",

"lower", "front", "rear", "left", "right", "vertical", "horizontal", "top", "bottom", "inner", "outer" are based on the orientation or position relationships shown in the figures, which are only for the convenience of describing the present invention, rather than indicating or implying that the device or elements must be in designated orientation, or configured or operated in designated orientation so that they cannot be understood as the limitation of this invention.

The above embodiments only describe the preferred mode of the invention, and do not limit the scope of the invention. Under the premise of not departing from the design spirit of the invention, various modifications and improvements made by ordinary technicians in the field to the technical scheme of the invention shall fall within the protection scope determined by the claims of the invention.

CLAIMS

1. grinding equipment in additive manufacturing, comprising:

a workbench (1), wherein a clamping component is fixedly installed on the workbench (1) and used for fixing a workpiece (2);

a dust collecting mechanism (3), wherein the dust collecting mechanism (3) is arranged in the inner cavity of the workbench (1) and communicated with the top surface of the workbench (1); the dust collecting mechanism (3) comprises a cleaning component rotatably connected to the inner cavity of the workbench (1), and the cleaning component is obliquely arranged; the lower part of the cleaning component is in sliding contact with a separation net (31);

a supporting mechanism (4), wherein the supporting mechanism (4) comprises two upright posts (41) symmetrically and slidably connected to the top surface of the workbench (1), the opposite surfaces of the two upright posts (41) are respectively and slidably connected with adjusting components, and a mounting rod (42) is rotatably connected between the two adjusting components;

a grinding mechanism (5), wherein the grinding mechanism (5) is slidably connected to the bottom end of the mounting rod (42) and is detachably connected with the workpiece (2).

2. The grinding equipment in additive manufacturing according to claim 1, characterized in that the each adjusting component comprises a first slider (43) longitudinally and slidably connected to the side wall of the upright posts (41), and a first motor (44) is installed on one side of the first sliders (43) facing the workpiece

(2), and the output shaft of the first motor (44) is connected with an adjusting piece in a transmission connection way, the mounting rod (42) is rotatably connected between the two adjusting pieces; the adjusting piece comprises a U-shaped adjusting frame (45), and the opening of the adjusting frame (45) faces the output end of the first motor (44); an adjusting groove (46) runs through the bottom end of the inner cavity of the adjusting frame (45), and the output shaft of the first motor (44) is slidably connected with the adjusting groove (46); any side wall of the inner cavity of the adjusting frame (45) is fixedly connected with a rack (47), and the rack (47) is meshed with an adjusting gear (48), the adjusting gear (48) is sleeved on the output shaft of the first motor (44) and detachably connected with the first motor (44); an adjusting block (49) is rotatably sleeved on the output shaft of the first motor (44), and the adjusting block (49) abuts against the first motor (44); the outer wall of the adjusting block (49) is rectangular and is matched with the adjusting groove (46); the adjusting block (49) is slidably connected in the adjusting groove (46).

3. The grinding equipment in additive manufacturing according to claim 1, characterized in that the bottom end of the mounting rod (42) is provided with an upward mounting groove (411), and a second motor (412) is mounted on one side of the mounting groove (411), and the output shaft of the second motor (412) is connected with a mounting screw (413) in a transmission way, and the mounting screw (413) is connected with a mounting block (414) in a threaded way, the mounting block (414) is slidably connected with the mounting groove (411), and the grinding mechanism (5) is installed at the bottom end of the mounting block (414);

the grinding mechanism (5) comprises a grinding motor (51) installed at the bottom end of the mounting block (414), and the output shaft of the grinding motor (51) faces the workpiece (2) and is detachably connected with a grinding head (52); the output shaft of the grinding motor (51) is fixedly connected with a connecting rod (53), and the bottom end of the connecting rod (53) is provided with a connecting hole (54), and a grinding rod (55) is detachably connected in the connecting hole (54), and the bottom end of the grinding rod (55) extends out of the connecting hole (54) and is fixedly connected with the top end of the grinding head (52), the side wall of the connecting hole (54) is provided with a plurality of fasteners, one end of each fastener is detachably connected with the grinding rod (55), the other end of each fastener extends out of the connecting rod (53) and is detachably connected with a locking nut (56), and the locking nut (56) is threadedly connected with the outer wall of the connecting rod (53).

4. The grinding equipment in additive manufacturing according to claim 3, characterized in that the fastener comprises a jacking hole (57) opened on the side wall of the connecting rod (53), and the jacking hole (57) is communicated with the connecting hole (54); the jacking hole (57) is slidably connected with a jacking rod (58), and one end of the jacking rod (58) facing the grinding rod (55) is fixedly connected with a ball head (59), and the ball head (59) is detachably connected with an annular groove (510) on the side wall of the grinding rod (55); the other end of the jacking rod (58) is fixedly connected with a pushing block (511), and the pushing block (511) extends out of the jacking hole (57) and is detachably connected with the

locking nut (56); a return spring (512) is fixedly connected between the pushing block (511) and the jacking hole (57), and the return spring (512) is sleeved outside the jacking rod (58); the top end of the grinding rod (55) is fixedly connected with a first permanent magnet (513), and the first permanent magnet (513) is connected with a second permanent magnet (514) by attraction, the second permanent magnet (514) is fixedly connected with the top of the connecting hole (54) through a connecting spring (515).

5. The grinding equipment in additive manufacturing according to claim 1, characterized in that the cleaning component comprises a driving shaft (32) and a driven shaft (33) which are rotatably connected to the inner cavity of the workbench (1), one end of the driving shaft (32) extends out of the workbench (1) and is connected with a cleaning motor (34) in a transmission way, and the cleaning motor (34) is installed on the side wall of the workbench (1), the driving shaft (32) is sleeved with two symmetrically arranged driving wheels (35), the driven shaft (33) is sleeved with two symmetrically arranged driven wheels (36), and the correspondingly arranged driving wheels (35) are in transmission connection with the driven wheels (36) through a transmission belt (37); a plurality of cleaning blocks (315) are fixedly connected to the outer wall of the transmission belt (37), a cleaning rod (38) is fixedly connected between two corresponding cleaning blocks (315), and a plurality of cleaning bristles (39) are fixedly connected to one side of the cleaning rod (38) far from the transmission belt (37), and the tail ends of the cleaning bristles (39) are in sliding contact with the separation net (31); the separation net (31) is obliquely

arranged and parallel to the transmission belt (37); the side wall of the workbench (1) corresponding to the bottom end of the separation net (31) is provided with a dust outlet (310), the outer wall of the workbench (1) is detachably connected with a dust collecting box (311), and the dust outlet (310) is communicated with the inside of the dust collecting box (311).

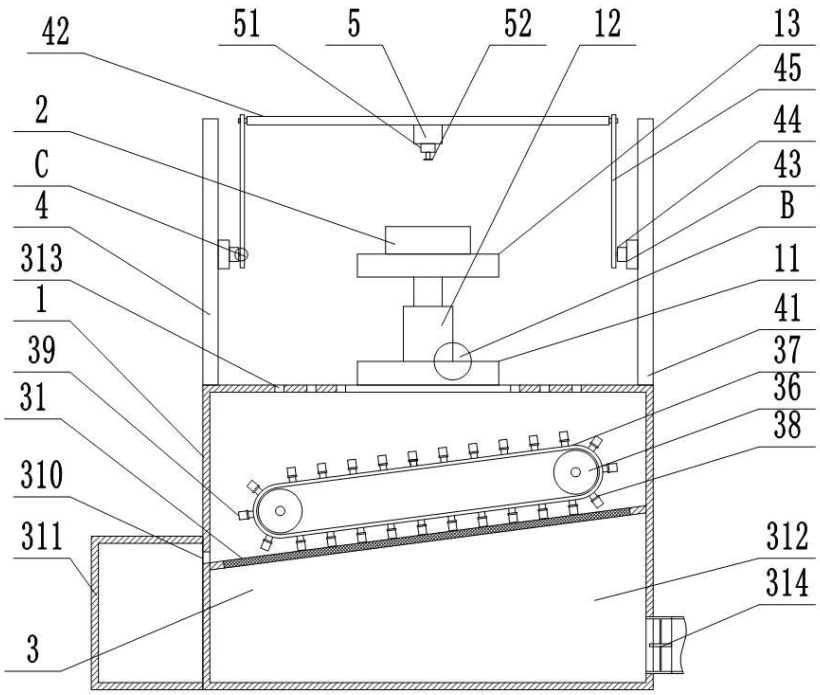
42
51
5
52
12
13
45
2
44
C
43
4
B
313
11
1
41
39
37
31
36
38
310
311
312
314
3

Fig. 1

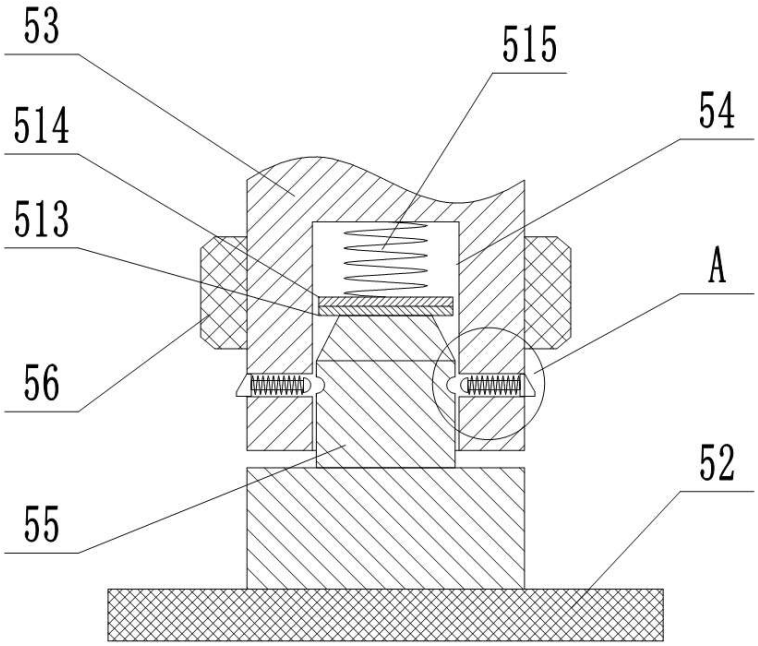
53
515
514
54
513
A
56
52
55

Fig. 2

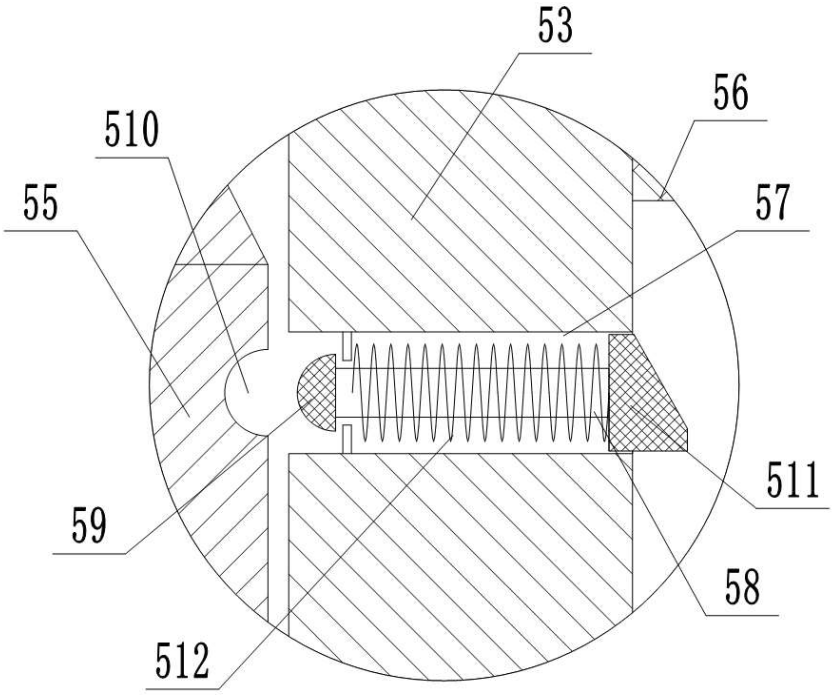

Fig. 3

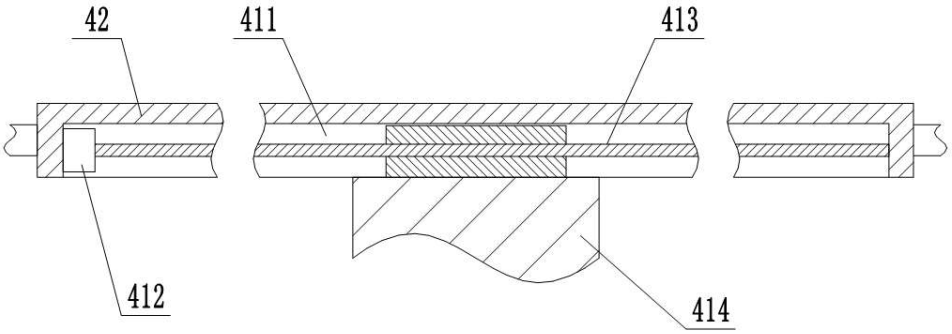

Fig. 4

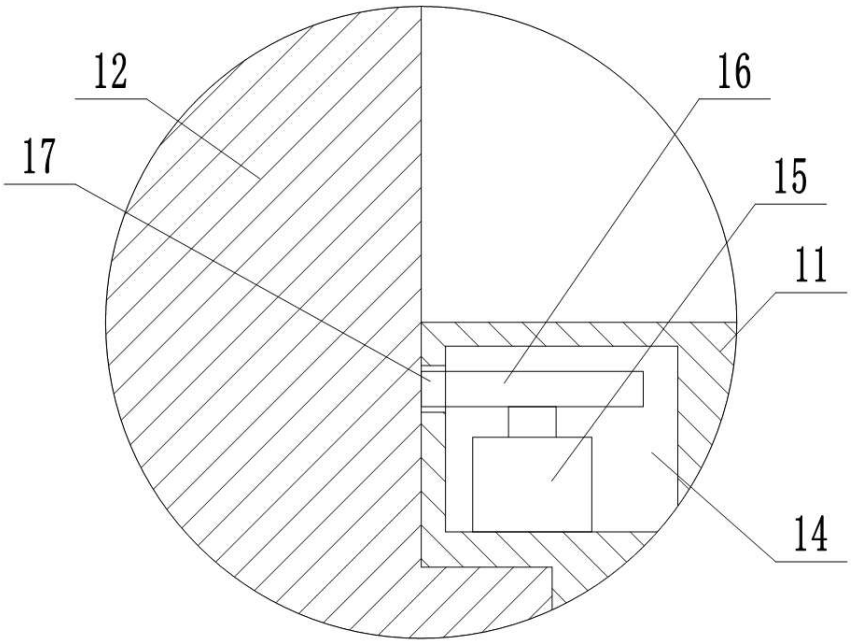

Fig. 5

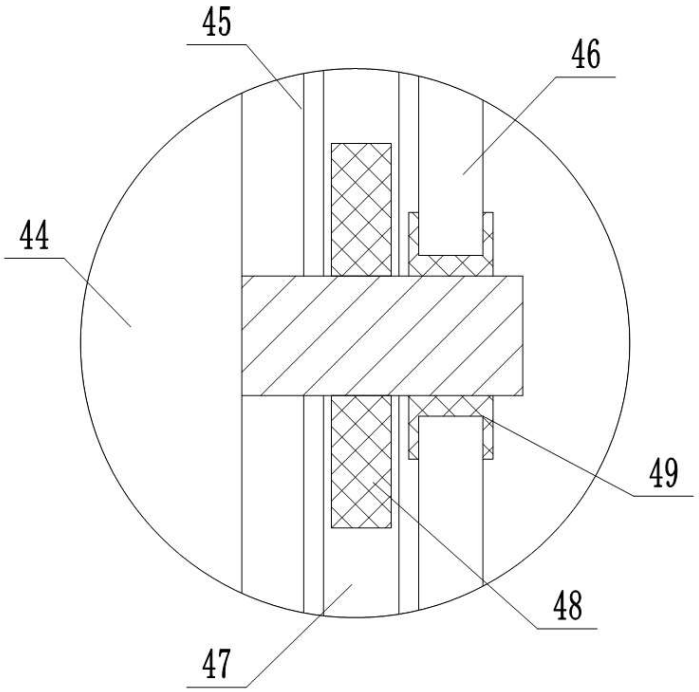

Fig. 6

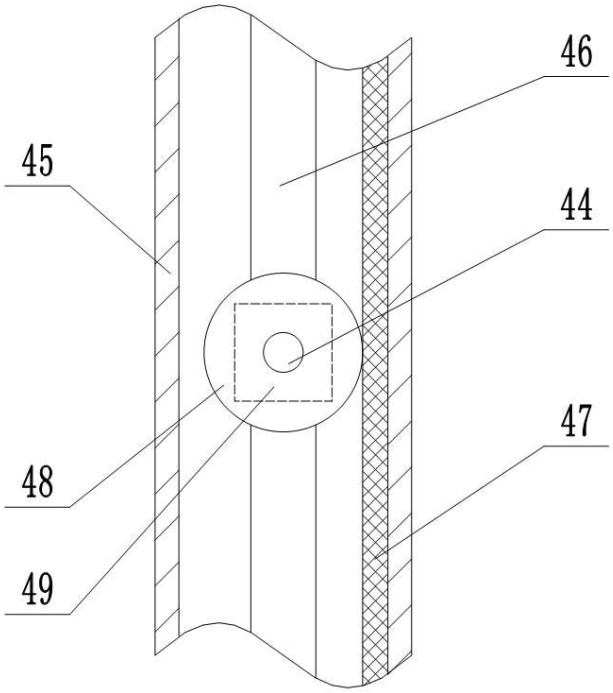

Fig. 7

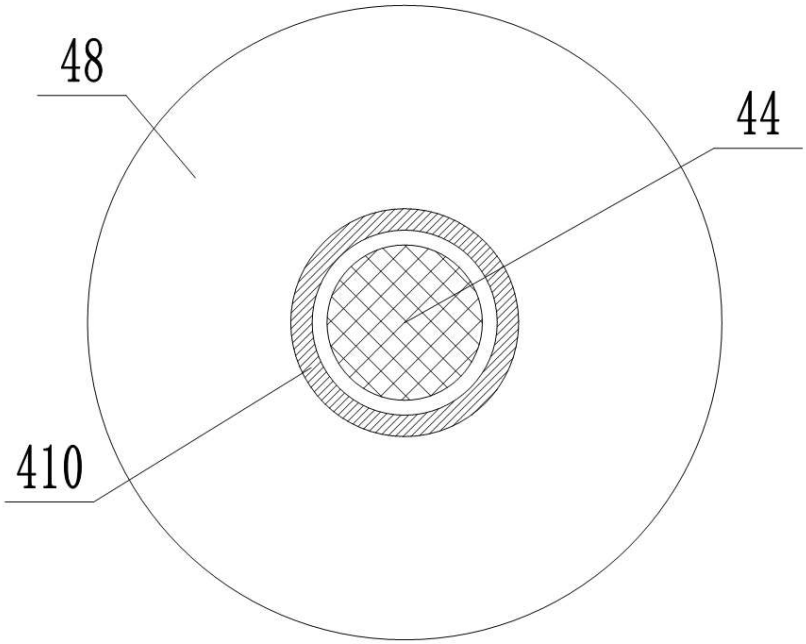

Fig. 8

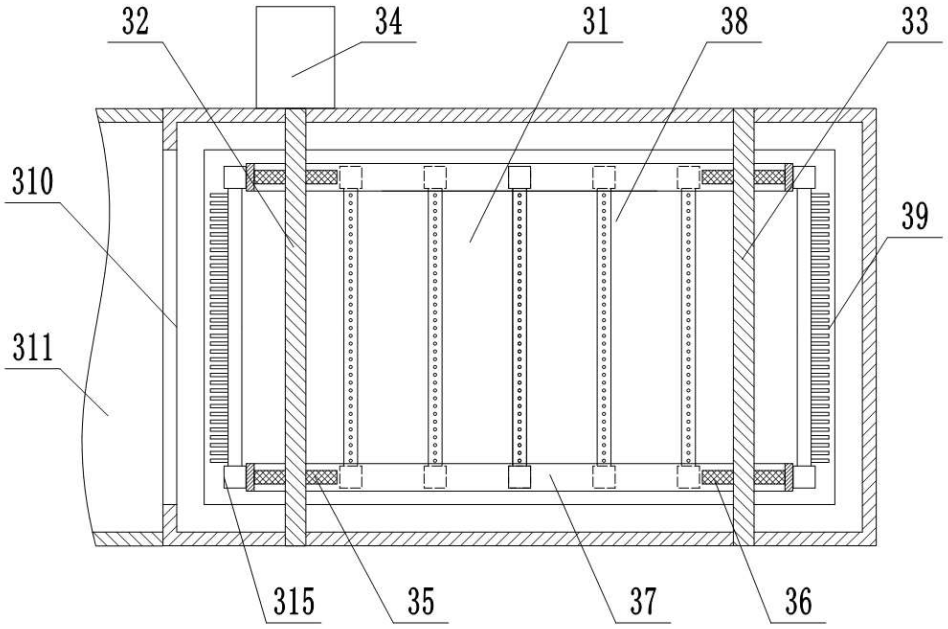

Fig. 9

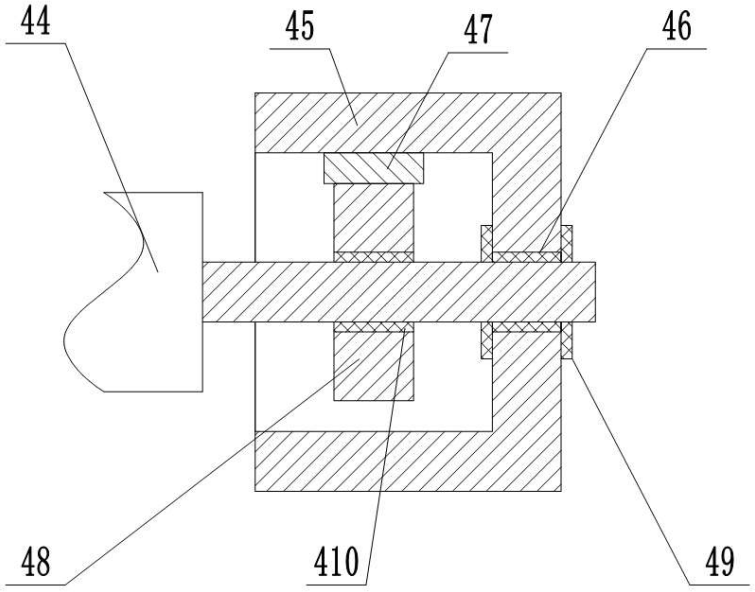

Fig. 10