(12) STANDARD PATENT (11) Application No. **AU 2009347078 C1**
(19) AUSTRALIAN PATENT OFFICE

(54) Title
Capsule, system and method for preparing a predetermined quantity of beverage suitable for consumption

(51) International Patent Classification(s)
A47J 31/36 (2006.01)

(21) Application No: **2009347078** (22) Date of Filing: **2009.12.30**

(87) WIPO No: **WO10/137954**

(30) Priority Data

(31) Number	(32) Date	(33) Country
09170590.5	**2009.09.17**	**EP**
09162931.1	**2009.06.17**	**EP**
09162895.8	**2009.06.17**	**EP**
09167851.6	**2009.08.13**	**EP**
09162914.7	**2009.06.17**	**EP**
09163310.7	**2009.06.19**	**EP**

(43) Publication Date: **2010.12.02**
(44) Accepted Journal Date: **2016.04.07**
(44) Amended Journal Date: **2022.04.14**

(71) Applicant(s)
Koninklijke Douwe Egberts B.V.

(72) Inventor(s)
Kamerbeek, Ralf;Flamand, John Henri;Post Van Loon, Angenita Dorothea;Koeling, Hendrik Cornelis;Biesheuvel, Arend Cornelis Jacobus

(74) Agent / Attorney
Davies Collison Cave Pty Ltd, Level 15 1 Nicholson Street, MELBOURNE, VIC, 3000, AU

(56) Related Art
EP 1849715
WO 2007/137974
WO 2008/078990
FR 2213757
CH 434609

(12) INTERNATIONAL APPLICATION PUBLISHED UNDER THE PATENT COOPERATION TREATY (PCT)

(19) World Intellectual Property Organization
International Bureau

(43) International Publication Date
2 December 2010 (02.12.2010)

PCT

(10) International Publication Number
WO 2010/137954 A1

(51) International Patent Classification:
A47J 31/36 (2006.01)

(21) International Application Number:
PCT/NL2009/050822

(22) International Filing Date:
30 December 2009 (30.12.2009)

(25) Filing Language: English

(26) Publication Language: English

(30) Priority Data:

09162895.8	17 June 2009 (17.06.2009)	EP
09162914.7	17 June 2009 (17.06.2009)	EP
09162931.1	17 June 2009 (17.06.2009)	EP
09163310.7	19 June 2009 (19.06.2009)	EP
09167851.6	13 August 2009 (13.08.2009)	EP
09170590.5	17 September 2009 (17.09.2009)	EP

(71) Applicant *(for all designated States except US)*: **SARA LEE/DE N.V.** [NL/NL]; Keulsekade 143, NL-3532 AA Utrecht (NL).

(72) Inventors; and

(75) Inventors/Applicants *(for US only)*: **KAMERBEEK, Ralf** [NL/NL]; Ten Veldestraat 59, NL-3454 EJ De Meern (NL). **FLAMAND, John Henri** [NL/NL]; Meulunterseweg 72, NL-6741 HP Lunteren (NL). **POST VAN LOON, Angenita Dorothea** [NL/NL]; Weerschijnvlinder 11, NL-3544 DT Utrecht (NL). **KOELING, Hendrik Cornelis** [NL/NL]; Harderwijkkade 11, NL-3826 BE Amersfoort (NL). **BIESHEUVEL, Arend Cornelis Jacobus** [NL/NL]; Raadhuislaan 7, NL-4251 VS Werkendam (NL).

(74) Agent: **HATZMANN, M.J.**; Vereenigde, Johan de Wittlaan 7, NL-2517 JR Den Haag (NL).

(81) Designated States *(unless otherwise indicated, for every kind of national protection available)*: AE, AG, AL, AM, AO, AT, AU, AZ, BA, BB, BG, BH, BR, BW, BY, BZ, CA, CH, CL, CN, CO, CR, CU, CZ, DE, DK, DM, DO, DZ, EC, EE, EG, ES, FI, GB, GD, GE, GH, GM, GT, HN, HR, HU, ID, IL, IN, IS, JP, KE, KG, KM, KN, KP, KR, KZ, LA, LC, LK, LR, LS, LT, LU, LY, MA, MD, ME, MG, MK, MN, MW, MX, MY, MZ, NA, NG, NI, NO, NZ, OM, PE, PG, PH, PL, PT, RO, RS, RU, SC, SD, SE, SG, SK, SL, SM, ST, SV, SY, TH, TJ, TM, TN, TR, TT, TZ, UA, UG, US, UZ, VC, VN, ZA, ZM, ZW.

(84) Designated States *(unless otherwise indicated, for every kind of regional protection available)*: ARIPO (BW, GH, GM, KE, LS, MW, MZ, NA, SD, SL, SZ, TZ, UG, ZM, ZW), Eurasian (AM, AZ, BY, KG, KZ, MD, RU, TJ, TM), European (AT, BE, BG, CH, CY, CZ, DE, DK, EE, ES, FI, FR, GB, GR, HR, HU, IE, IS, IT, LT, LU, LV,

[Continued on next page]

(54) Title: CAPSULE, SYSTEM AND METHOD FOR PREPARING A PREDETERMINED QUANTITY OF BEVERAGE SUITABLE FOR CONSUMPTION

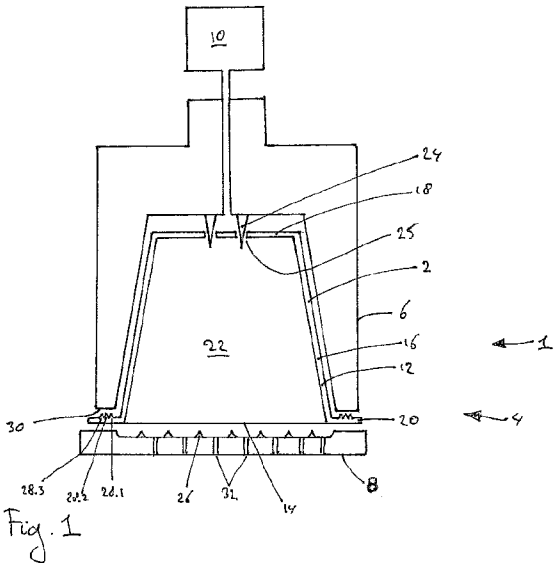

Fig. 1

(57) Abstract: The invention relates to a system (1), method and capsule (2) for preparing a predetermined quantity of beverage suitable for consumption using an extractable product. The system comprises an exchangeable capsule, and an apparatus (104) comprising a receptacle (106) for holding the exchangeable capsule, and a fluid dispensing device (126) for supplying a fluid to the exchangeable capsule. The exchangeable capsule comprises a circumferential wall (18), a bottom (12), and a lid (16). The wall, bottom and lid enclose an inner space (20) comprising the extractable product. The capsule comprises an exit area to allow draining from the prepared beverage from the capsule there through, wherein the exit area comprises a filter layer (36). The filter layer comprises a layer of non-woven and/or woven fibrous material with at least one first region where the non-woven and/or woven material has been sealed to prevent egress of liquid there through and at least one second region where the non-woven and/or woven material has not been sealed to allow egress of liquid there through.

WO 2010/137954 A1

MC, MK, MT, NL, NO, PL, PT, RO, SE, SI, SK, SM, TR), OAPI (BF, BJ, CF, CG, CI, CM, GA, GN, GQ, GW, ML, MR, NE, SN, TD, TG).

Published:

— *with international search report (Art. 21(3))*

— *upon request of the applicant, before the expiration of the time limit referred to in Article 21(2)(a)*

2009347078 07 Mar 2016

Title: Capsule, system and method for preparing a predetermined quantity of beverage suitable for consumption

The invention relates to a capsule, system and method for preparing a predetermined quantity of beverage suitable for consumption using a product.

Systems for preparing a beverage, such as coffee, using a brewing device for supplying a liquid, such as water, under pressure to a capsule comprising a dose of a beverage ingredient are known. Commonly, the brewing device comprises an enclosing member for enclosing the capsule. In use a sealing engagement is provided between the capsule and the enclosing member, so as to prevent leaking of a liquid, e.g. water or the beverage. The sealing engagement is usually obtained by pressing the capsule and the enclosing member against each other along a circumferential line of contact.

It is possible that the material of the enclosing member at the location of the sealing engagement, e.g. an elastomeric material, is softer than the material of the capsule at the location of the sealing engagement, e.g. aluminium. Such system is for instance known from EP 1 203 554. In such case the material of the enclosing member at the location of the sealing engagement may be compressed. Such systems may have the disadvantage that the material of the enclosing member at the location of the sealing engagement can subject to wear, degradation and/or fouling, so that the quality of the sealing engagement may deteriorate if the age of the brewing device increases.

This disadvantage seems to be, at least partially, overcome by other known systems, wherein the material of the enclosing member at the location of the sealing engagement, e.g. a metal, is harder than the material of the capsule at the location of the sealing engagement, e.g. a plastics material. Such system is for instance known from FR 2 617 389. In such case the material of the capsule at the location of the sealing engagement may be compressed. Such systems have the advantage that the material of the enclosing member at the

2009347078 15 Mar 2017

location of the sealing engagement may be less subject to wear, degradation and/or fouling, while good sealing engagement may be obtained. Especially when the material of the capsule at the location of the sealing engagement is the same material as the material of the circumferential wall, the capsule may be manufactured with great ease. This may, however, provide the disadvantage that such sealing engagement may be upset if the enclosing member, at the location of the sealing engagement, possesses irregularities, such as scratches, crevices, caked-on foul, protrusions or the like.

According to a first aspect of the present invention, there is provided a capsule for preparing a predetermined quantity of beverage suitable for consumption using a product, the capsule comprising:

a cup comprising a circumferential wall, a bottom closing the circumferential wall at a first end, and a flange-like rim extending outwardly of the circumferential wall at a second end opposite the bottom; and

a lid connected or connectable to the flange-like rim, whereby the wall, bottom and lid, when the capsule is in use, enclose an inner space in which the product is contained,

wherein the cup is provided with substantially concentric, outwardly extending circumferential ridges which are made of the same material as the cup, the ridges being integral with the rim and arranged on a side of the rim facing away from the lid, the ridges including a ridge having a tapered cross section.

According to a second aspect of the present invention, there is provided a capsule for preparing a predetermined quantity of beverage suitable for consumption using a product, the capsule comprising:

a cup comprising a circumferential wall, a bottom closing the circumferential wall at a first end, and a flange-like rim extending outwardly of the circumferential wall at a second end opposite the bottom; and

a lid connected or connectable to the flange-like rim, whereby the wall, bottom and lid, when the capsule is in use, enclose an inner space in which the product is contained,

wherein the cup is provided with substantially concentric, outwardly extending circumferential ridges which are made of the same material as the cup, the ridges being integral with the rim and arranged on a side of the rim facing away from the lid, and wherein the ridges are made from a plastics material.

According to a third aspect of the present invention, there is provided a capsule for preparing a predetermined quantity of beverage suitable for consumption using a product, the capsule comprising:

a cup comprising a circumferential wall, a bottom closing the circumferential wall at a first end, and a flange-like rim extending outwardly of the circumferential wall at a second end opposite the bottom; and

a lid connected or connectable to the flange-like rim, whereby the wall, bottom and lid, when the capsule is in use, enclose an inner space in which the product is contained,

wherein the cup is provided with substantially concentric, outwardly extending circumferential ridges which are made of the same material as the cup, the ridges being integral with the rim and arranged on a side of the rim facing away from the lid

wherein the capsule includes a further circumferential ridge which is substantially concentric with said circumferential ridges and is on the side of the rim facing away from the lid, wherein the further ridge has a height that is greater than a height of the substantially concentric circumferential ridges.

According to a fourth aspect of the present invention, there is provided a capsule for use in a beverage preparation device to prepare a predetermined quantity of beverage suitable for consumption using a product, the capsule comprising:

a cup comprising a circumferential wall, a bottom closing the circumferential wall at a first end, and a flange-like rim extending outwardly of the circumferential wall at a second end opposite the bottom, the cup being receivable by an enclosing member of the device; and

a lid connected or connectable to the flange-like rim, whereby the wall,

2009347078 27 May 2019

bottom and lid, when the capsule is in use, enclose an inner space in which the product is contained,

wherein the cup is provided with substantially concentric, outwardly extending circumferential ridges which are made of the same material as the cup, the ridges being integral with the rim and arranged on a side of the rim facing away from the lid, and wherein the ridges are arranged such that at least one of them abuts the enclosing member when the capsule is in use, such that a sealing engagement between the capsule and the enclosing member is formed.

Preferably, the capsule is configured such that at least one said ridge which abuts the enclosing member is plastically deformed as a result of its abutting the enclosing member.

The capsule may include a further circumferential ridge, which is arranged to abut an outer circumferential surface of the enclosing member when the capsule is in use. Preferably, the further circumferential ridge is substantially concentric with said substantially concentric circumferential ridges. Preferably, a height of the further circumferential ridge is different from a height of the substantially concentric circumferential ridges. Preferably, the height of the further circumferential ridge is greater than the height of the substantially concentric circumferential ridges. Preferably, the further circumferential ridge comprises a conical section.

According to a fifth aspect of the present invention, there is provided a capsule for preparing a predetermined quantity of beverage suitable for consumption using a product, the capsule comprising:

a cup comprising a circumferential wall, a bottom closing the circumferential wall at a first end, and a flange-like rim extending outwardly of the circumferential wall at a second end opposite the bottom; and

a lid connected or connectable to the flange-like rim, whereby the wall, bottom and lid, when the capsule is in use, enclose an inner space in which the product is contained,

wherein the cup is provided with substantially concentric, outwardly extending circumferential ridges which are made of the same material as the cup,

2009347078 27 May 2019

the ridges being integral with the rim and arranged on a side of the rim facing away from the lid, and wherein the bottom comprises openings for allowing a liquid to enter the inner space.

In a preferred embodiment of the invention, the thickness of the rim is less at the location where the substantially concentric circumferential ridges are present than at a location adjacent thereto.

In a preferred embodiment of the invention, the thickness of the rim is greater at the location where the ridges are present than at a location adjacent thereto.

According to a sixth aspect of the present invention, there is provided a system for preparing a predetermined quantity of beverage suitable for consumption using a product, the system comprising:

a capsule according to the first, second or third aspect of the invention; and

a beverage brewing device comprising an enclosing member for enclosing the capsule,

the system being such that when it is in use, at least one of the ridges abuts at least a portion of the enclosing member, such that a sealing engagement between the capsule and the enclosing member is formed.

2009347078 27 May 2019

According to a seventh aspect of the present invention, there is provided a system for preparing a predetermined quantity of beverage suitable for consumption using a product, the system comprising:

a capsule according to the fourth aspect of the invention; and

said beverage preparation device,

whereby, when the system is in use, at least one of the substantially concentric circumferential ridges abuts the enclosing member, such that said a sealing engagement between the capsule and the enclosing member is formed.

According to an eighth aspect of the present invention, there is provided a method of preparing a predetermined quantity of beverage suitable for consumption using a product, comprising the steps of:

providing a capsule according to the first, second or third aspect of the invention;

providing a beverage brewing device comprising an enclosing member for enclosing the capsule;

inserting said circumferential wall and said bottom into the enclosing member, such that at least one of the ridges abuts at least a portion of the enclosing member, whereby a sealing engagement between the capsule and the enclosing member is formed;

providing a liquid, such as water, to the inner space of the capsule, so as to prepare the beverage; and

draining the beverage from the capsule.

According to a ninth aspect of the present invention, there is provided a method of preparing a predetermined quantity of beverage suitable for consumption using a product, comprising the steps of:

providing a capsule according to the fourth aspect of the invention;

providing said beverage brewing device;

inserting said circumferential wall and said bottom into the enclosing member, such that at least one of the substantially concentric

2009347078 15 Mar 2017

circumferential ridges abuts the enclosing member, whereby said sealing engagement is formed;

providing a liquid, such as water, to the inner space of the capsule, so as to prepare the beverage; and

draining the beverage from the capsule.

In use, at least one of the circumferential ridges may abut against at least a portion of the enclosing member, such that the sealing engagement is formed between, e.g. the top of, at least one of the ridges and the at least one portion of the enclosing member. Since the plurality of ridges is provided, a misalignment between the capsule and the enclosing member may be allowed while still obtaining the sealing engagement.

The ridges, in being arranged on the side of the flange-like rim facing away from the lid, may abut against a leading edge of the enclosing member. Thus, the sealing engagement may be formed at the location of the flange-like rim.

The ensemble of the ridges and the cup may be a unitary piece. Thus manufacture of the cup may include manufacture of the ridges, e.g. by injection moulding the ensemble of the cup and the ridges. Hence, easy manufacture of the cup of the capsule may be obtained.

In one embodiment, each ridge of the plurality of ridges has substantially the same height prior to use. Hence, each of the ridges of the plurality of ridges may contribute to the sealing engagement between the capsule and the enclosing member. Optionally, each ridge of the plurality of ridges has substantially the same width. It is not excluded, however, that the ridges have mutually different heights and/or widths.

It is possible that a width of a ridge of the plurality of ridges is smaller than a height of that ridge. Preferably this applies to each ridge of the plurality of ridges, whereby the ridge has a slender form, allowing easy deformation of the ridge, e.g. by compression of a top edge of he ridge towards a base of the ridge. Hence, the ridge may easily follow an irregularity of the enclosing member at the location of the sealing engagement, e.g. a dent and/or a protrusion at the leading edge of the enclosing member.

2009347078 15 Mar 2017

Preferably, a ridge of the plurality of the ridges has a width that is equal to or less than a thickness of the flange-like rim. Preferably, a ridge of the plurality of ridges has a height that is equal to or less than a thickness of the flange-like rim. Preferably, a ridge of the plurality of ridges has a height that is equal to or less than a minimum thickness of the flange-like rim at the location where the ridges are present. Preferably this applies to each ridge of the plurality of ridges. Hence, a resistance of the ridge against compression may be less than a resistance against compression of the rim. Thus, the rim may be rigid relative to the ridge, while the ridge may possess enough compressibility due to its shape and/or dimensions to provide the sealing engagement with the enclosing member even if the enclosing member comprises an irregularity at the location of the sealing engagement.

It is possible that a ridge of the plurality of ridges has a height of less than 0.4 mm, preferably less than 0.3 mm, more preferably less than 0.21 mm, even more preferably less than 0.15 mm. It is also possible that a ridge of the plurality of ridges has a maximum width of less than 0.3 mm, preferably less than 0.21 mm, more preferably less than 0.15 mm. Preferably this applies to each ridge of the plurality of ridges. These dimensions have been found to provide good sealing engagement between the ridge and the enclosing member.

In an embodiment, said tapered cross section is a substantially triangular cross section. Preferably this applies to each ridge of the plurality of ridges. This provides the advantage that compression of the ridge requires a progressively increasing force. Hence, the ridge can easily follow the contour of an irregularity of the enclosing member since this will exert a locally increased force on the ridge. Other cross sections, such as a semicircular cross section or a beam-shaped cross section, possibly with rounded corners, are conceivable too.

Preferably, all ridges of the plurality of ridges have the same cross sectional shape.

In an embodiment, a (mutual) radial distance between two neighbouring ridges is less than a maximum width of the ridges, preferably

2009347078 15 Mar 2017

less than 50% of the maximum width, more preferably less than 25% of the maximum width. Thus, the ridges are spaced closely together, allowing a good chance that at least one of the ridges properly abuts against the enclosing member, while still allowing ample space for the ridges to widen due to compression. Also, the closely spaced ridges allow for increased tolerance to misalignment of the capsule with respect to the enclosing member, since the narrow space between the ridges may form a labyrinth providing sufficient resistance against fluid flow to provide a sufficient sealing engagement between the capsule and the enclosing member, even if not one single ridge fully abuts against the enclosing member.

Preferably, the lid is connected to the flange-like rim and the inner space is at least partially filled with the product. Hence, the capsule ready for use is provided. The capsule may be hermetically closed, e.g. so as to improve shelf life of the capsule. The hermetically closed capsule holds the product out of contact with the environment of the capsule, as opposed to an open capsule in which the product is in contact with the environment.

Alternatively, the lid and/or bottom is porous and/or comprises openings for allowing a liquid to enter and/or exit the inner space.

In an embodiment, the capsule is disposable. The disposable capsule is designed and intended to be disposed after single use. Thus, problems associated with hygiene, e.g. microbial growth, may be minimised. The capsule may also be biodegradable to minimise environmental load.

Preferably, the capsule is designed for preparing a single serving of the beverage.

In the preferred embodiments of the invention, at least a portion of a leading edge of the enclosing member is arranged to abut against at least one of the ridges.

Preferably, the ridges each have an individual width that is less than the width of the leading edge of the enclosing member. This provides the advantage that the ridges are narrow relative to the leading edge of the enclosing member. Thus, the ridges may easily adapt to a, e.g. small,

2009347078 15 Mar 2017

irregularity, such as a dent, scratch, crevice and/or protrusion, on the leading edge of the enclosing member.

Preferably, the plurality of ridges has a combined width that is larger than the width of the leading edge of the enclosing member. Hence, considerable tolerance for misalignment of the capsule with respect to the leading edge of the enclosing member is provided.

It is possible that a ridge of the plurality of ridges has a height that is less than the width of the leading edge of the enclosing member. Preferably this applies to each ridge of the plurality of ridges. Thus, the ridge has a small height relative to the width of the leading edge of the enclosing member. This may prevent buckling of the ridges so that good sealing engagement between the leading edge of the enclosing member and the ridges may be obtained.

The invention will now be further elucidated by means of, non-limiting, examples referring to the drawings, in which

Fig. 1 shows a schematic representation of a first example of a system according to the invention;

Fig. 2 shows a schematic representation of a second example of a system according to the invention;

Fig. 3a shows an enlarged detail of a part of the system according to the invention;

Fig. 3b shows an enlarged detail of a part of the system according to the invention;

Fig. 4 shows an enlarged detail of a part of the system according to the invention;

Fig. 5a shows a schematic representation of an example of another system;

Fig. 5b shows a schematic representation of an example of yet another system;

Fig. 6a shows a schematic representation of a further example of a system according to the invention; and

2009347078 15 Mar 2017

Fig. 6b shows a schematic representation of an even further example of a system according to the invention.

In the Figures and the following description, like reference numerals refer to like features.

Fig. 1 shows a schematic representation, in cross sectional view, of a first example of a system 1 for preparing a predetermined quantity of beverage suitable for consumption using an extractable product. The system 1 comprises an exchangeable capsule 2, and a beverage brewing device 4. The device 4 comprises enclosing member 6 for holding the exchangeable capsule 2. In this example, the device 4 further comprises a support member 8 for supporting the capsule 2.

In Fig. 1 a gap is drawn between the capsule 2, the enclosing member 6 and the support member 8 for clarity. It will be appreciated that, in use, the capsule 2 may lie in contact with the enclosing member 6 and the support member 8. Commonly, the enclosing member 6 has a shape complementary to the shape of the capsule 2. The apparatus 4 further comprises a fluid dispensing device 10 for supplying an amount of a fluid, such as water, under a pressure, of e.g. 9 bars, to the exchangeable capsule 2.

In the example shown in Fig. 1, the exchangeable capsule 2 comprises a cup 12 and a lid 14. In this example, the cup 12 comprises a circumferential wall 16, a bottom 18 closing the circumferential wall 16 at a first end, and a flange-like rim 20 extending outwardly of the circumferential wall 16 at a second end opposite the bottom 18 wall. The circumferential wall 16, the bottom 18 and the lid 14 enclose an inner space 22 comprising the extractable product. In this example, the capsule is initially sealed, i.e. is hermetically closed prior to use.

The system 1 of Fig. 1 comprises bottom piercing means 24 for piercing the bottom 18 of the capsule 2 for creating at least one entrance opening 25 in the bottom 18 for supplying the fluid to the extractable product through the entrance opening 25.

2009347078 15 Mar 2017

The system 1 of Fig. 1 further comprises lid piercing means 26, here embodied as protrusions of the support member 8, for piercing the lid 14 of the capsule 2. The lid piercing means 26 may be arranged to tear the lid 14 once a (fluid) pressure inside the inner space 22 exceeds a threshold pressure and presses the lid 14 against the lid piercing means 26 with sufficient force. The lid 14 may e.g. comprise a tearable foil, e.g. made of aluminium.

The cup 12 further comprises a plurality of substantially concentric circumferential ridges 28.i (i=1,2,3). The ridges 28.i are arranged on the flange-like rim 20, on the side thereof facing away from the lid 14. More generally put, the ridges 28.i extend outwardly of the cup 12. The ridges 28.i are made of the same material as the cup 12, and are integral with the cup 12. It will be appreciated that in this example, the circumferential ridges at least partially circumscribe the inner space 22 of the capsule 2.

As can be seen from Fig. 1, in use the ridges 28.i may abut against a leading edge 30 of the enclosing member 6. When in this example at least one ridge 28.i abuts against at least a portion of the leading edge 30 of the enclosing member 6, a sealing engagement is obtained between the enclosing member 6 and the capsule 2 at the location where the at least one ridge 28.i abuts against at least the portion of the leading edge 30 of the enclosing member 6.

The system 1 shown in Fig. 1 is operated as follows for preparing a cup of coffee, wherein the extractable product is roasted and ground coffee.

The capsule 2 is placed in the enclosing member 6. The support member 8 is brought into contact with the capsule 2. The bottom piercing means 24 pierce the bottom 18 of the capsule 2 for creating the entrance openings 25. The fluid, here hot water under pressure, is supplied to the extractable product in the inner space 22 through the entrance openings 25. The water will wet the coffee grounds and extract the desired substances to form the coffee beverage.

During supplying the water under pressure to the inner space 22, the pressure inside the capsule 2 will rise. The rise in pressure will cause the lid 14 to deform and be pressed against the lid piercing means 26. Once the pressure reaches a certain level, the tear strength of the lid 14 will be surpassed and the lid will rupture against the lid piercing means 26, creating exit openings. The prepared coffee will drain from the capsule 2 through the exit openings and outlets 32 of the support member 8, and may be supplied to a container such as a cup (not shown).

Fig. 2 shows a schematic representation, in cross sectional view, of a second example of a system 1 for preparing a predetermined quantity of beverage suitable for consumption using an extractable product. The system 1 comprises an exchangeable capsule 2, and a beverage brewing device 4. The device 4 comprises enclosing member 6 for holding the exchangeable capsule 2.

2009347078 15 Mar 2017

In this example, the device 4 further comprises a support member 8 for supporting the capsule 2.

In Fig. 2 a gap is drawn between the capsule 2, the enclosing member 6 and the support member 8 for clarity. It will be appreciated that, in use, the capsule 2 may lie in contact with the enclosing member 6 and the support member 8. Commonly, the enclosing member 6 has a shape complementary to the shape of the capsule 2. The apparatus 4 further comprises a fluid dispensing device 10 for supplying an amount of a fluid, such as water, under a pressure, of e.g. 9 bars, to the exchangeable capsule 2.

In the example shown in Fig. 2, the exchangeable capsule 2 comprises a cup 12 and a lid 14. In this example, the cup 12 comprises a circumferential wall 16, a bottom 18 closing the circumferential wall 16 at a first end, and a flange-like rim 20 extending outwardly of the circumferential wall 16 at a second end opposite the bottom 18 wall. The circumferential wall 16, the bottom 18 and the lid 14 enclose an inner space 22 comprising the extractable product. In this example, the capsule is initially open. Hence, the capsule 2 comprises pre-made entrance openings 25. The entrance openings 25 may be through holes in the bottom 18. Further, the capsule 2 comprises premade exit openings 27. The exit holes 27 may be through holes in a foil-like lid 14, e.g. manufactured from plastics material, or may be pores in a porous lid, e.g. manufactured from a non-woven material such as filter paper.

The system 1 of Fig. 2 does not comprise bottom piercing means or lid piercing means 26.

The cup 12 is provided with a plurality of substantially concentric circumferential ridges 28.i (i=1,2,3,...) arranged on the flange-like rim 20 on the side thereof facing away from the lid 14. More generally put, the ridges 28.i extend outwardly of the cup 12. The ridges 28.i are made of the same material as the cup 12, and are integral with the cup 12.

As can be seen from Fig. 2, in use the ridges 28.i may abut against a leading edge 30 of the enclosing member 6. When in this example at least one ridge 28.i abuts against at least a portion of the leading edge 30 of the

2009347078 15 Mar 2017

enclosing member 6, a sealing engagement is obtained between the enclosing member 6 and the capsule 2 at the location where the at least one ridge 28.i abuts against at least the portion of the leading edge 30 of the enclosing member 6.

The system 1 shown in Fig. 2 is operated as follows for preparing a cup of coffee, wherein the extractable product is roasted and ground coffee.

The capsule 2 is placed in the enclosing member 6. The support member 8 is brought into contact with the capsule 2. The fluid, here hot water under pressure, is supplied to the extractable product in the inner space 22 through the entrance opening 25. The water will wet the coffee grounds and extract the desired substances to form the coffee beverage.

During supplying the water under pressure to the inner space 22, the pressure inside the capsule 2 may rise. The prepared coffee will drain from the capsule 2 through the exit openings 27 and outlets 32 of the support member 8, and may be supplied to a container such as a cup (not shown).

Figs. 3a and 3b show an enlarged detail of a part of the system 1 according to the invention. In this example four circumferential ridges 28.i are arranged on the flange-like rim 20. The ridges 28.i are integral with the rim 20. The ridges 28.i are arranged concentrically with respect to each other, and are also arranged concentrically with an axis of the cup 12. It will be appreciated that the ridges 28.i need not be exactly concentric as long as in use, at least one of the ridges 28.i abuts against at least a portion of the enclosing member 6, such that the sealing engagement is formed between, e.g. the top of, at least one of the ridges and the at least one portion of the enclosing member. Since the plurality of ridges is provided, a misalignment between the capsule and the enclosing member may be allowed while still obtaining the sealing engagement.

In Fig. 3a the leading edge 30 of the enclosing member 6 comprises an irregularity in the form of a protrusion 34, e.g. a bulge, a burr or a lump (e.g. caked-on debris). It can be seen that in this example one particular ridge 28.3 of the ridges 28.i abuts the protrusion 34 and is locally more compressed. Hence, the ridges 28.i and the enclosing member 6 are in sealing engagement despite the presence of the protrusion 34.

In Fig. 3b the leading edge 30 of the enclosing member 6 comprises an irregularity in the form of a recess 35, e.g. a dent, scratch or a crevice. It can be seen that in this example one particular ridge 28.2 of the ridges 28.i faces the recess 35. A neighbouring ridge 28.3 will, accordingly be locally more compressed and abut the leading edge 30 of the enclosing member 6. Hence, the ridges 28.i and the enclosing member 6 are in sealing engagement despite the presence of the recess 35.

In the examples of Figs. 3a and 3b, each of the ridges 28.i has a substantially triangular cross section. This provides the advantage that compression of the ridges 28.i requires a progressively increasing force. Hence, each ridge 28.i can easily follow the contour of the irregularity of the enclosing member 6.

In the examples of Figs. 3a and 3b, all ridges have substantially the same height H_R prior to use, e.g. prior to being compressed. Hence, all ridges 28.i may equally contribute to the sealing engagement between the capsule 2 and the enclosing member 6. Hence, a misalignment between the capsule 2 and the enclosing member 6 may be tolerated, without the leading edge 30 failing to abut any ridge 28.i.

In the examples of Figs. 3a and 3b the ridges 28.i each have a maximum individual width W_R that is less than the width W_{LE} of the leading edge 30 of the enclosing member 6. Thus, each ridge 28.i is narrow relative to the leading edge 30, so that each ridge 28.i can easily be compressed by the leading edge 30. Further, here the plurality of ridges 28.i has a combined width W_C that is larger than the width W_{LE} of the leading edge 30 of the

2009347078 15 Mar 2017

enclosing member 6. Hence, a misalignment between the capsule 2 and the enclosing member 6 may be tolerated, without the leading edge 30 failing to abut any ridge 28.i.

In these examples, the width W_R of each of the ridges 28.i is smaller than the height H_R of that ridge prior to use. Hence the ridges 28.i have a slender form, allowing easy deformation of the ridges 28.i, e.g. by compression of a top edge 36 of the ridges towards a base 38 of the ridges 28.i. Hence, the ridges 28.i may easily follow the irregularity in the enclosing member 6 at the location of the sealing engagement. It is noted that herein the width W_R of the ridge is measured parallel to the plane onto which the ridge is arranged and that the height H_R of the ridge is measured orthogonal to the width.

In these examples, the width W_R each of the ridges 28.i is less than a thickness H_F of the flange-like rim 20. In these examples, the width W_R each of the ridges 28.i is less than a minimum thickness H_F of the flange-like rim 20 at the location where the ridges are present. Also in these examples, the height H_R of each of the ridges 28.i prior to use is less than the thickness H_F of the flange-like rim 20. Hence, a resistance against compression of the ridges 28.i may be less than a resistance against compression of the rim 20. In these examples the rim 20 will be rigid relative to the ridges 28.i, while the ridges 28.i may possess enough compressibility due to their shape and dimensions to provide the sealing engagement with the enclosing member 6 even if the enclosing member comprises the irregularity at the location of the sealing engagement. It will be appreciated that the ratio of the resistance against compression of the ridges 28.i to the resistance against compression of the rim 20 may be further improved by increasing the thickness of the rim 20 at least locally at the position of the ridges 28.i.

The geometry of the ridges 28.i allows the ridges 28.i to adapt to an irregularity at the enclosing member 6, even if a material is chosen which allows the remainder of the cup 12 to be substantially rigid. Such substantially rigid cup 12 may increase the ease of handling of the capsule 2. It is possible that the ridges 28.i are unitary not only with the flange-like rim 20 but also

2009347078 15 Mar 2017

with the circumferential wall 16, and optionally the bottom 18, e.g. of a plastics material. It has been found that in such case the cup 12 may be substantially rigid, while the ridges 28.i may cooperate with the enclosing member 6 to provide the sealing engagement even if the chosen plastics material has a shore D hardness of 70 or more.

In these examples, the thickness of the rim 20 is approximately 0.2 mm. In these examples, the width of the leading edge 30 of the enclosing member 6 is approximately 0.7 mm. In these examples the height H_R of each of the ridges 28.i is approximately 0.2 mm prior to use. Preferably the height H_R is less than 0.3 mm, more preferably less than 0.21 mm, it is also possible that the height H_R is less than 0.15 mm prior to use. In these examples the maximum width W_R of each of the ridges 28.i is approximately 0.14 mm. Preferably, the width W_R is less than 0.3 mm, more preferably less than 0.21 mm, most preferably less than 0.15 mm. These dimensions have been found to provide good sealing engagement between the ridges 28.i and the enclosing member 6.

In the examples of Figs. 3a and 3b the ridges 28.i are spaced radially such that two neighbouring ridges substantially abut radially. More in general, the radial distance between two neighbouring ridges 28.i is preferably less than the maximum width W_R of the ridges 28.i, more preferably less than 50% of the maximum width W_R, most preferably less than 25% of the maximum width W_R. Thus, the ridges 28.i are spaced closely together, allowing a good chance that at least one of the ridges 28.i properly abuts against the leading edge 30 of the enclosing member 6. Also, the closely spaced ridges 28.i allow for increased tolerance to misalignment of the capsule 2 with respect to the enclosing member 6, since the narrow space between the ridges 28.i may form a labyrinth providing sufficient resistance against fluid flow to provide a sufficient sealing engagement, even if not one single ridge 28.i fully abuts against the enclosing member 6.

In the system according to Fig. 3a or Fig. 3b, the ridges 28.i are integrally formed with the cup 12. The ensemble of the cup 12 and ridges 28.i

2009347078 15 Mar 2017

may e.g. be injection moulded in one piece. The ensemble may be formed from a plastics material, such as for instance polypropylene.

In a preferred embodiment the material of the ridges 28.i is chosen to be plastically deformable. Preferably, the ridges 28.i, at least the tops 36 of the ridges may be plastically deformed upon contact with the enclosing member 6. The plastically deforming ridges 28.i may easily adapt to an irregularity of the enclosing member 6 at the location of the sealing engagement.

It will be appreciated that the details of Figs. 3a and 3b may be applied to the system described in view of Fig. 1 as well as to the system described in view of Fig. 2.

Fig. 4 shows an enlarged detail of a part of an elaborate system 1 according to the invention. In this example, in addition to the plurality of ridges 28.i, the capsule 2 comprises a further ridge 40.

In Fig. 4 the further ridge 40 is arranged on the flange-like rim 20, on the side facing away from the lid 14. The further ridge 40 is integral with the flange-like rim 20 and is substantially concentric with the ridges 28.i. The further ridge 40 is positioned circumscribing the ridges 28.i. It will be noted that a height H_{FR} of the further ridge 40 is different from the height H_R of the ridges 28.i. In this example, the height H_{FR} of the further ridge 40 is larger than the height H_R of the ridges 28.i.

In this example, the further ridge 40 is arranged to abut against an outer circumferential surface 42 of the enclosing member 6. The outer circumferential surface 42 may be wedged against the inner circumferential surface 44 of the further ridge 40. In order to facilitate insertion of the enclosing member 6 within the perimeter of the further ridge 40, the further ridge 40 may comprise a conical section 46 on the inner circumferential surface 44.

Thus, in this example at least one of the ridges 28.i abuts against the enclosing member 6, and additionally, the further ridge 40 abuts against

2009347078 15 Mar 2017

the enclosing member 6. Hence, an improved sealing engagement between the capsule 2 and the enclosing member 6 may be obtained.

It will be appreciated that the further ridge 40 may also be applied in the situations described with respect to Figs. 1, 2, 3a and 3b.

Fig. 5a shows a schematic representation of an example of another system 1. The system 1 shown in Fig. 5a is substantially identical to the system shown in Fig. 1. In Fig. 5a, however, the location of the ridges 28.i on the cup 12 is different. In this example, the ridges 28.i are located on the circumferential side wall 16 of the cup 12. Here, the ridges 28.i abut against an inner circumferential surface 48 of the enclosing member 6. In Fig. 5a the ridges 28.i and the inner circumferential surface 48 are in sealing engagement.

Fig. 5b shows a schematic representation of an example of yet another system 1. The system 1 shown in Fig. 5b is substantially identical to the system shown in Fig. 2. In Fig. 5b, however, the location of the ridges 28.i on the cup 12 is different. In this example, the ridges 28.i are located on the outer surface of the bottom 18 of the cup 12. Here, the ridges 28.i abut against an inner back surface 50 of the enclosing member 6. In Fig. 5b the ridges 28.i and the inner back surface 50 are in sealing engagement.

Fig. 6a shows a schematic representation of a further example of a system 1 according to the invention. The system 1 shown in Fig. 6a is substantially identical to the system shown in Fig. 3a and Fig. 3b. In Fig. 6a,

however, the flange-like rim comprises a thickened portion at the location where the ridges 28.i are present. That is a thickness H_F of the flange-like rim is greater at the location where the ridges are present than a thickness H_{Fa} of the flange-like rim at a location adjacent thereto. This embodiment may prove useful when a height H_R of the ridges would otherwise become so large that the ridges might become unstable.

Fig. 6b shows a schematic representation of a further example of a system 1 according to the invention. The system 1 shown in Fig. 6b is substantially identical to the system shown in Fig. 3a and Fig. 3b. In Fig. 6b, however, the flange-like rim comprises a thinned portion at the location where the ridges 28.i are present. That is a thickness H_F of the flange-like rim is smaller at the location where the ridges are present than a thickness H_{Fa} of the flange-like rim at a location adjacent thereto. This embodiment may prove useful when a height H_R of the ridges would otherwise become to small to be properly deformed.

In the foregoing specification, the invention has been described with reference to specific examples of embodiments of the invention. It will, however, be evident that various modifications and changes may be made therein without departing from the broader spirit and scope of the invention as set forth in the appended claims.

It is for instance possible that the capsule as shown in fig. 2 is used in the system of Fig. 1. It is possible that in such instance the capsule is designed such that the bottom is not pierced by the bottom piercing means. It is also possible that the lid and the lid piercing means are designed such that the lid is not torn under the effect of fluid pressure in the inner space of the capsule.

It will be appreciated that if the enclosing member has the leading edge for abutting the flange-like rim of the capsule, this leading edge may also comprise irregularities in the form of a plurality of radially extending grooves. Also in such case a sealing engagement may be obtained between the leading

2009347078 15 Mar 2017

edge of the enclosing member and the ridges arranged on the rim of the capsule.

It is possible that the capsule is provided as a fillable or refillable capsule that can be filled or refilled by a user, respectively. Such capsule may be provided as a separate cup and lid that may be connected to the cup by the user after filling the capsule with a beverage ingredient. Alternatively, the lid may be partially, e.g. hingedly, connected to the cup so the user can connect the lid to substantially the entire perimeter of the flange-like rim after filling the cup with the beverage ingredient.

In the examples, the plurality of ridges comprises three or four ridges. It will be appreciated that also another number of ridges may be used, such as two, five, six, seven, eight, nine or ten ridges.

In the examples the capsules are substantially rotation symmetric about a central axis. It will be appreciated that the capsule may also have different shapes. In the examples, the ridges are substantially circular about the central axis. It will be appreciated that the ridges also may have other shapes.

However, other modifications, variations and alternatives are also possible. The specifications, drawings and examples are, accordingly, to be regarded in an illustrative rather than in a restrictive sense.

Throughout this specification and the claims which follow, unless the context requires otherwise, the word "comprise", and variations such as "comprises" and "comprising", will be understood to imply the inclusion of a stated integer or step or group of integers or steps but not the exclusion of any other integer or step or group of integers or steps.

Furthermore, the words ‘a’ and ‘an’ shall not be construed as limited to ‘only one’, and do not exclude a plurality. The mere fact that certain measures are recited in mutually different claims does not indicate that a combination of these measures cannot be used to advantage.

2009347078 27 May 2019

Claims

1. A capsule for preparing a predetermined quantity of beverage suitable for consumption using a product, the capsule comprising:

a cup comprising a circumferential wall, a bottom closing the circumferential wall at a first end, and a flange-like rim extending outwardly of the circumferential wall at a second end opposite the bottom; and

a lid connected or connectable to the flange-like rim, whereby the wall, bottom and lid, when the capsule is in use, enclose an inner space in which the product is contained,

wherein the cup is provided with substantially concentric, outwardly extending circumferential ridges which are made of the same material as the cup, the ridges being integral with the rim and arranged on a side of the rim facing away from the lid, and wherein the bottom comprises openings for allowing a liquid to enter the inner space.

2. A capsule for preparing a predetermined quantity of beverage suitable for consumption using a product, the capsule comprising:

a cup comprising a circumferential wall, a bottom closing the circumferential wall at a first end, and a flange-like rim extending outwardly of the circumferential wall at a second end opposite the bottom; and

a lid connected or connectable to the flange-like rim, whereby the wall, bottom and lid, when the capsule is in use, enclose an inner space in which the product is contained,

wherein the cup is provided with substantially concentric, outwardly extending circumferential ridges which are made of the same material as the cup, the ridges being integral with the rim and arranged on a side of the rim facing away from the lid, the ridges including a ridge having a tapered cross section.

3. A capsule according to claim 2, wherein the tapered cross section is substantially triangular.

4. A capsule for preparing a predetermined quantity of beverage suitable for consumption using a product, the capsule comprising:

2009347078 27 May 2019

a cup comprising a circumferential wall, a bottom closing the circumferential wall at a first end, and a flange-like rim extending outwardly of the circumferential wall at a second end opposite the bottom; and

a lid connected or connectable to the flange-like rim, whereby the wall, bottom and lid, when the capsule is in use, enclose an inner space in which the product is contained,

wherein the cup is provided with substantially concentric, outwardly extending circumferential ridges which are made of the same material as the cup, the ridges being integral with the rim and arranged on a side of the rim facing away from the lid, and wherein the ridges are made from a plastics material.

5. A capsule for preparing a predetermined quantity of beverage suitable for consumption using a product, the capsule comprising:

a cup comprising a circumferential wall, a bottom closing the circumferential wall at a first end, and a flange-like rim extending outwardly of the circumferential wall at a second end opposite the bottom; and

a lid connected or connectable to the flange-like rim, whereby the wall, bottom and lid, when the capsule is in use, enclose an inner space in which the product is contained,

wherein the cup is provided with substantially concentric, outwardly extending circumferential ridges which are made of the same material as the cup, the ridges being integral with the rim and arranged on a side of the rim facing away from the lid,

wherein the capsule includes a further circumferential ridge which is substantially concentric with said circumferential ridges and is on the side of the rim facing away from the lid, wherein the further ridge has a height that is greater than a height of the substantially concentric circumferential ridges.

6. A capsule for use in a beverage preparation device to prepare a predetermined quantity of beverage suitable for consumption using a product, the capsule comprising:

a cup comprising a circumferential wall, a bottom closing the circumferential wall at a first end, and a flange-like rim extending outwardly of the circumferential wall at a second end opposite the bottom, the cup being receivable by an enclosing member of the device; and

2009347078 27 May 2019

a lid connected or connectable to the flange-like rim, whereby the wall, bottom and lid, when the capsule is in use, enclose an inner space in which the product is contained,

wherein the cup is provided with substantially concentric, outwardly extending circumferential ridges which are made of the same material as the cup, the ridges being integral with the rim and arranged on a side of the rim facing away from the lid, and wherein the ridges are arranged such that at least one of them abuts the enclosing member when the capsule is in use, such that a sealing engagement between the capsule and the enclosing member is formed.

7. A capsule according to claim 6, configured such that at least one said ridge which abuts the enclosing member is plastically deformed as a result of its abutting the enclosing member.

8. A capsule according to claim 6 or 7, including a further circumferential ridge, which is arranged to abut an outer circumferential surface of the enclosing member when the capsule is in use.

9. A capsule according to claim 8, wherein the further circumferential ridge is substantially concentric with said circumferential ridges.

10. A capsule according to claim 8 or 9, wherein a height of the further circumferential ridge is different from a height of the substantially concentric circumferential ridges.

11. A capsule according to any one of claims 8 to 10, wherein the height of the further circumferential ridge is greater than the height of the substantially concentric circumferential ridges.

12. A capsule according to any one of claims 5 and 8 to 11, wherein the further circumferential ridge comprises a conical section.

2009347078 27 May 2019

13. A capsule according to claim 6 or 7, wherein the substantially concentric circumferential ridges are arranged such that the or each ridge which abuts the enclosing member abuts a leading edge of the enclosing member, and the substantially concentric circumferential ridges have a combined width that is greater than a width of the leading edge.

14. A capsule according to claim 8, 9 or 10, wherein the substantially concentric circumferential ridges are arranged such that the or each ridge which abuts the enclosing member abuts a leading edge of the enclosing member, and the substantially concentric circumferential ridges have a combined width that is greater than a width of the leading edge.

15. A capsule according to any one of claims 2 to 14, wherein the thickness of the rim is less at the location where the substantially concentric circumferential ridges are present than at a location adjacent thereto.

16. A capsule according to any one of claims 2 to 4, 6, 7 and 13, wherein the thickness of the rim is greater at the location where the ridges are present than at a location adjacent thereto.

17. A capsule according to claim 1, wherein the thickness of the rim is less at the location where the substantially concentric circumferential ridges are present than at a location adjacent thereto.

18. A capsule according to claim 1, wherein the thickness of the rim is greater at the location where the ridges are present than at a location adjacent thereto.

19. A capsule according to any one of claims 2 to 16, wherein the lid is porous and/or comprises openings for allowing a liquid to enter or exit the inner space.

20. A capsule according to any one of claims 2 to 16, wherein the bottom is porous and/or comprises openings for allowing a liquid to enter or exit the inner space.

2009347078 27 May 2019

21. A capsule according to any one of claims 2 to 16, wherein the lid is porous and/or comprises openings for allowing a liquid to exit the inner space, and the bottom is porous and/or comprises openings for allowing a liquid to enter the inner space.

22. A capsule according to any one of the preceding claims, wherein the cup is made from a plastics material.

23. A capsule according to any one of the preceding claims, wherein the substantially concentric circumferential ridges and cup are a unitary piece.

24. A capsule according to any one of the preceding claims, wherein the substantially concentric circumferential ridges and cup are moulded.

25. A capsule according to any one of the preceding claims, wherein the substantially concentric circumferential ridges have substantially the same height.

26. A capsule according to any one of the preceding claims, wherein the substantially concentric circumferential ridges have substantially the same width.

27. A capsule according to any one of the preceding claims, wherein the substantially concentric circumferential ridges include a ridge smaller in width than in height.

28. A capsule according to any one of the preceding claims, wherein the substantially concentric circumferential ridges include a ridge having a width equal to or less than a thickness of the rim.

29. A capsule according to any one of the preceding claims, wherein the substantially concentric circumferential ridges include a ridge which has a height that is equal to or less than a thickness of the rim.

30. A capsule according to any one of the preceding claims, wherein the substantially concentric circumferential ridges have substantially the same cross sectional shape.

2009347078 27 May 2019

31. A capsule according to any one of the preceding claims, wherein a radial distance between two neighbouring ones of said substantially concentric circumferential ridges is less than a maximum width of the substantially concentric circumferential ridges.

32. A capsule according to claim 31, wherein said radial distance is less than 50% of said maximum width.

33. A capsule according to claim 32, wherein said radial distance is less than 25% of said maximum width.

34. A capsule according to any one of the preceding claims, wherein the number of said substantially concentric circumferential ridges is two, three, four, five, six, seven or eight.

35. A capsule according to any one of the preceding claims, wherein a said ridge has a height of less than 0.4 mm.

36. A capsule according to claim 35, wherein the height of the ridge having a height of less than 0.4 mm is less than 0.3 mm.

37. A capsule according to claim 36, wherein the height of the ridge having a height of less than 0.4 mm is less than 0.21 mm.

38. A capsule according to claim 37, wherein the height of the ridge having a height of less than 0.4 mm is less than 0.15 mm.

39. A capsule according to any one of the preceding claims, wherein said substantially concentric circumferential ridges include a ridge having a maximum width of less than 0.3 mm.

40. A capsule according to claim 39, wherein the maximum width of the ridge having a maximum width of less than 0.3 mm is less than 0.21 mm.

2009347078 27 May 2019

41. A capsule according to claim 40, wherein the maximum width of the ridge having a maximum width of less than 0.3 mm is less than 0.15 mm.

42. A capsule according to any one of the preceding claims, wherein the lid is connected to the rim and the inner space is at least partially filled with said product.

43. A capsule according to any one of the preceding claims, hermetically closed.

44. A capsule according to any one of the preceding claims, being disposable and/or biodegradable.

45. A system for preparing a predetermined quantity of beverage suitable for consumption using a product, the system comprising:

a capsule which accords with any one of claims 1 to 5 or any one of claims 15 to 44 as dependent therefrom; and

a beverage brewing device comprising an enclosing member for enclosing the capsule,

the system being such that when it is in use, at least one of the ridges abuts at least a portion of the enclosing member, such that a sealing engagement between the capsule and the enclosing member is formed.

46. A system according to claim 45, wherein at least a portion of a leading edge of the enclosing member is arranged to abut at least one of said substantially concentric circumferential ridges.

47. A system according to claim 46, wherein each of said substantially concentric circumferential ridges has an individual width that is less than a width of the leading edge.

48. A system according to claim 46 or 47, wherein the substantially concentric circumferential ridges have a combined width that is greater than a width of the leading edge.

2009347078 27 May 2019

49. A system for preparing a predetermined quantity of beverage suitable for consumption using a product, the system comprising:

a capsule according to any one of claims 6 to 10; and

said beverage preparation device,

whereby, when the system is in use, at least one of the substantially concentric circumferential ridges abuts the enclosing member, such that said a sealing engagement between the capsule and the enclosing member is formed.

50. A system according to claim 49, wherein the capsule accords with claim 13 or 14 and each of said substantially concentric circumferential ridges has an individual width that is less than the width of the leading edge.

51. A system according to any one of claims 46 to 48 and 50, wherein a said ridge has a height that is less than a width of the leading edge.

52. A system according to any one of claims 45 to 51, wherein said circumferential wall and said bottom are enclosed by the enclosing member such that said sealing engagement is formed.

53. A system according to claim 52, wherein at least one said circumferential ridge abutting the enclosing member is plastically deformed by the enclosing member.

54. A system according to claim 52 or 53, wherein the capsule accords with any one of claims 8 to 10 and the further ridge abuts an outer circumferential surface of the enclosing member.

55. A method of preparing a predetermined quantity of beverage suitable for consumption using a product, comprising the steps of:

providing a capsule which accords with any one of claims 1 to 5 or any one of claims 12 and 15 to 44 as dependent therefrom;

providing a beverage brewing device comprising an enclosing member for enclosing the capsule;

2009347078 27 May 2019

inserting said circumferential wall and said bottom into the enclosing member, such that at least one of the ridges abuts at least a portion of the enclosing member, whereby a sealing engagement between the capsule and the enclosing member is formed;

providing a liquid, such as water, to the inner space of the capsule, so as to prepare the beverage; and

draining the beverage from the capsule.

56. A method according to claim 55, comprising effecting abutment between at least a portion of a leading edge of the enclosing member and at least one of the ridges.

57. A method according to claim 56, wherein each of the ridges has an individual width that is less than a width of the leading edge.

58. A method according to claim 56 or 57, wherein the ridges have a combined width that is greater than a width of the leading edge.

59. A method of preparing a predetermined quantity of beverage suitable for consumption using a product, comprising the steps of:

providing a capsule according to any one of claims 6 to 10, 13 and 14;

providing said beverage brewing device;

inserting said circumferential wall and said bottom into the enclosing member, such that at least one of the substantially concentric circumferential ridges abuts the enclosing member, whereby said sealing engagement is formed;

providing a liquid, such as water, to the inner space of the capsule, so as to prepare the beverage; and

draining the beverage from the capsule.

60. A method according to claim 59, wherein the capsule accords with claim 13 or 14 and each of the ridges has an individual width that is less than the width of the leading edge.

61. A method according to any one of claims 56 to 58 and 60, wherein a said ridge has a height that is less than a width of the leading edge.

2009347078 27 May 2019

62. A method according to any one of claims 55 to 61, comprising pressing at least one of the substantially concentric circumferential ridges and the enclosing member together such that the sealing engagement is formed.

63. A method according to claim 62, wherein at least one said circumferential ridge abutting the enclosing member is plastically deformed by the enclosing member.

64. A method according to claim 62 or 63, wherein the capsule accords with any one of claims 8 to 10 and the further ridge abuts the outer circumferential surface of the enclosing member.

65. A method according to any one of claims 55 to 64, wherein the capsule is hermetically closed prior to use.

66. A capsule substantially as hereinbefore described with reference to the drawings and/or examples.

67. A system for preparing a predetermined quantity of beverage suitable for consumption, substantially as hereinbefore described with reference to the drawings and/or examples.

68. A method of preparing a predetermined quantity of beverage suitable for consumption, substantially as hereinbefore described with reference to the drawings and/or examples.

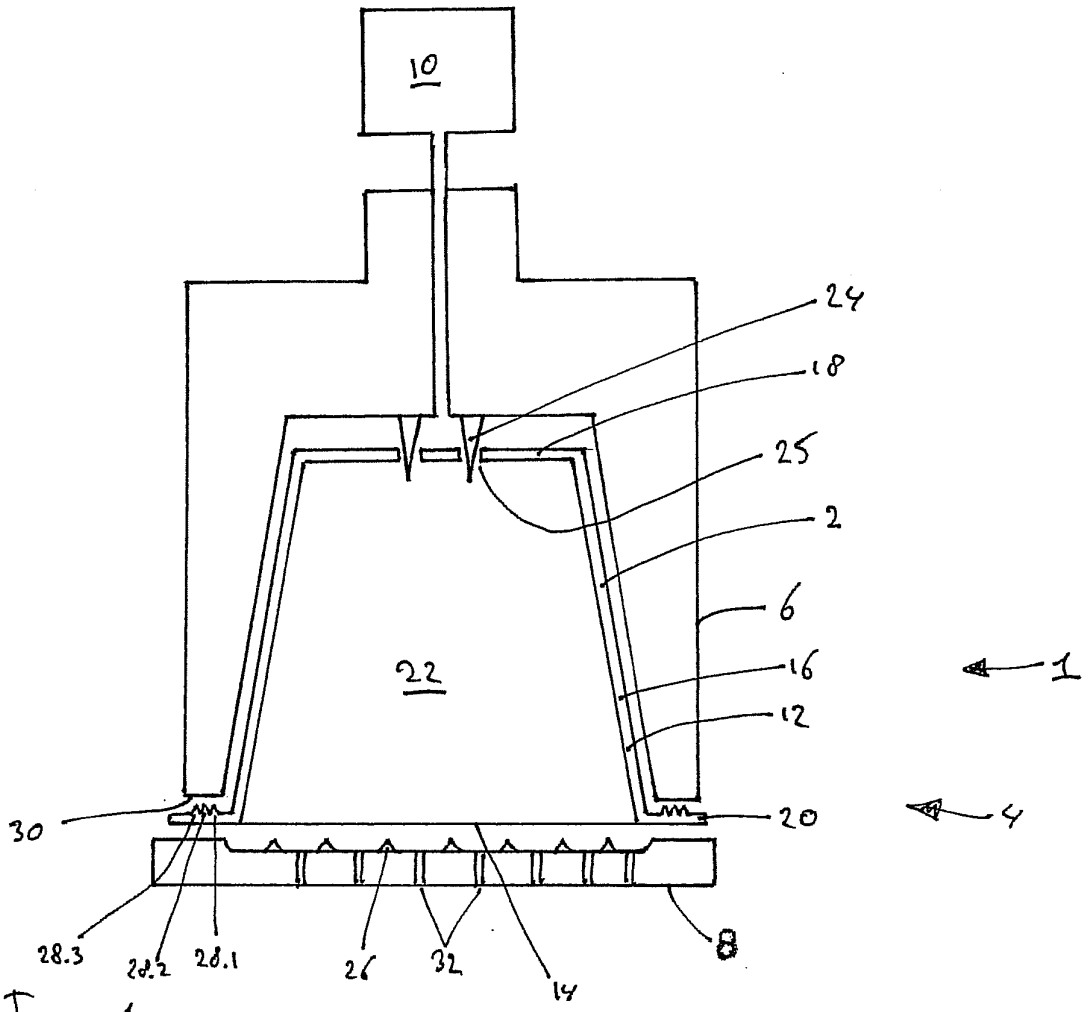

Fig. 1

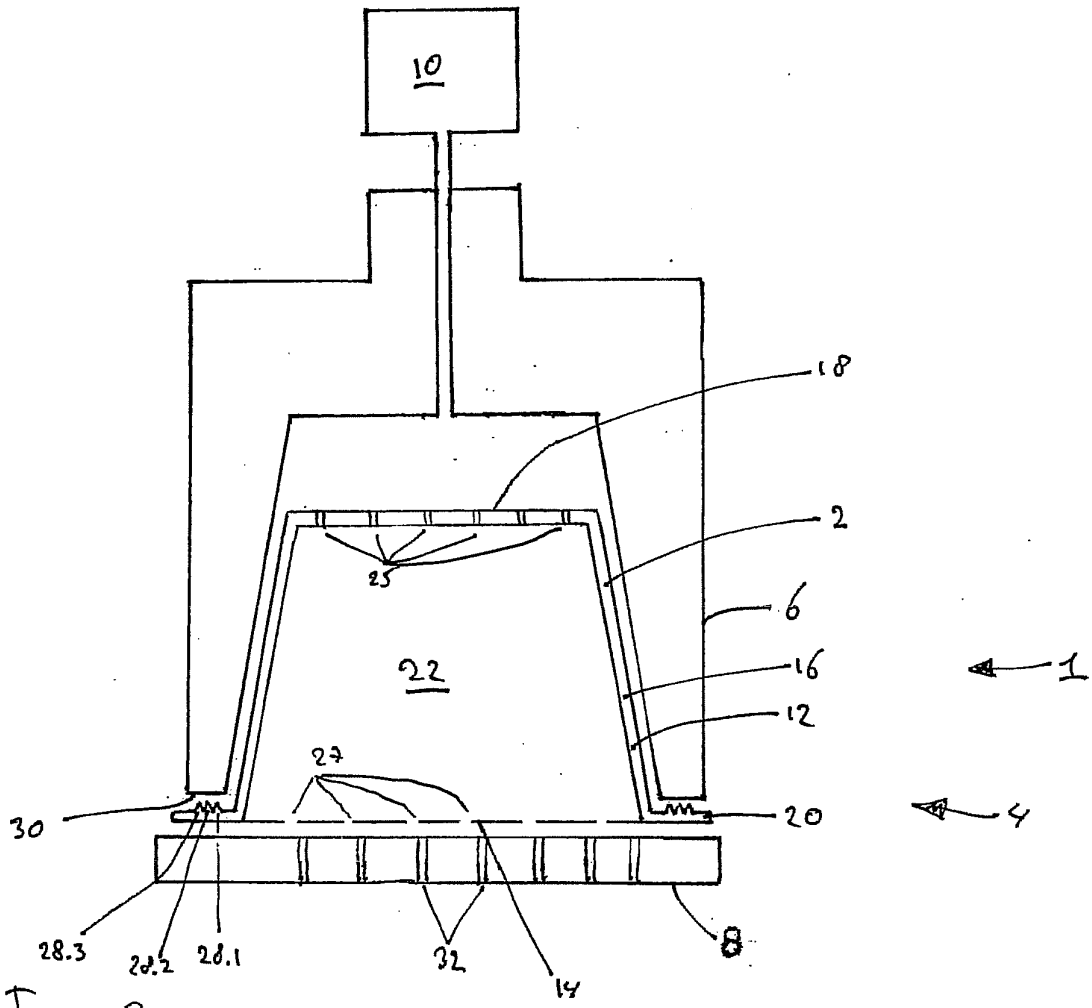

Fig. 2

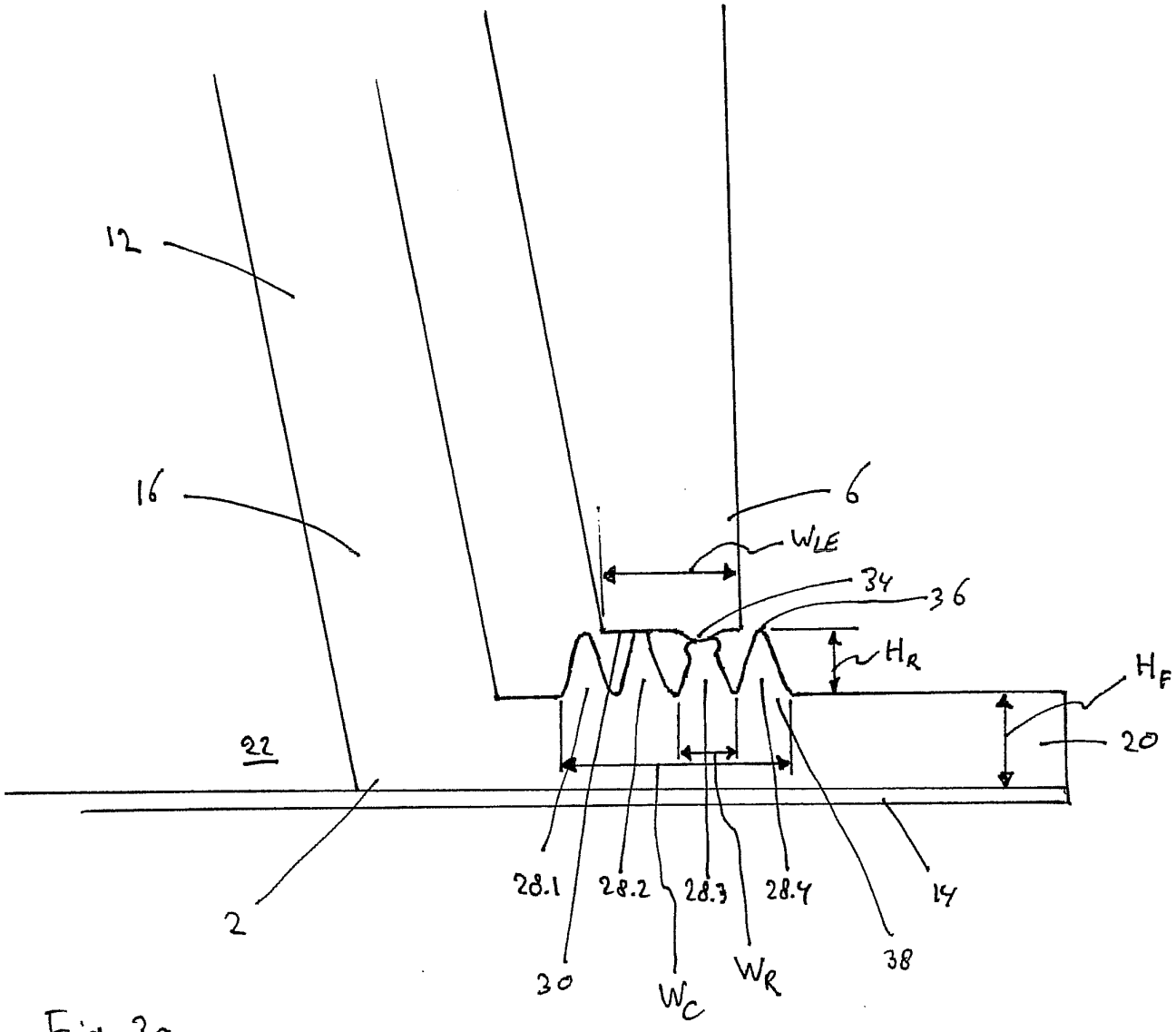

Fig. 3a

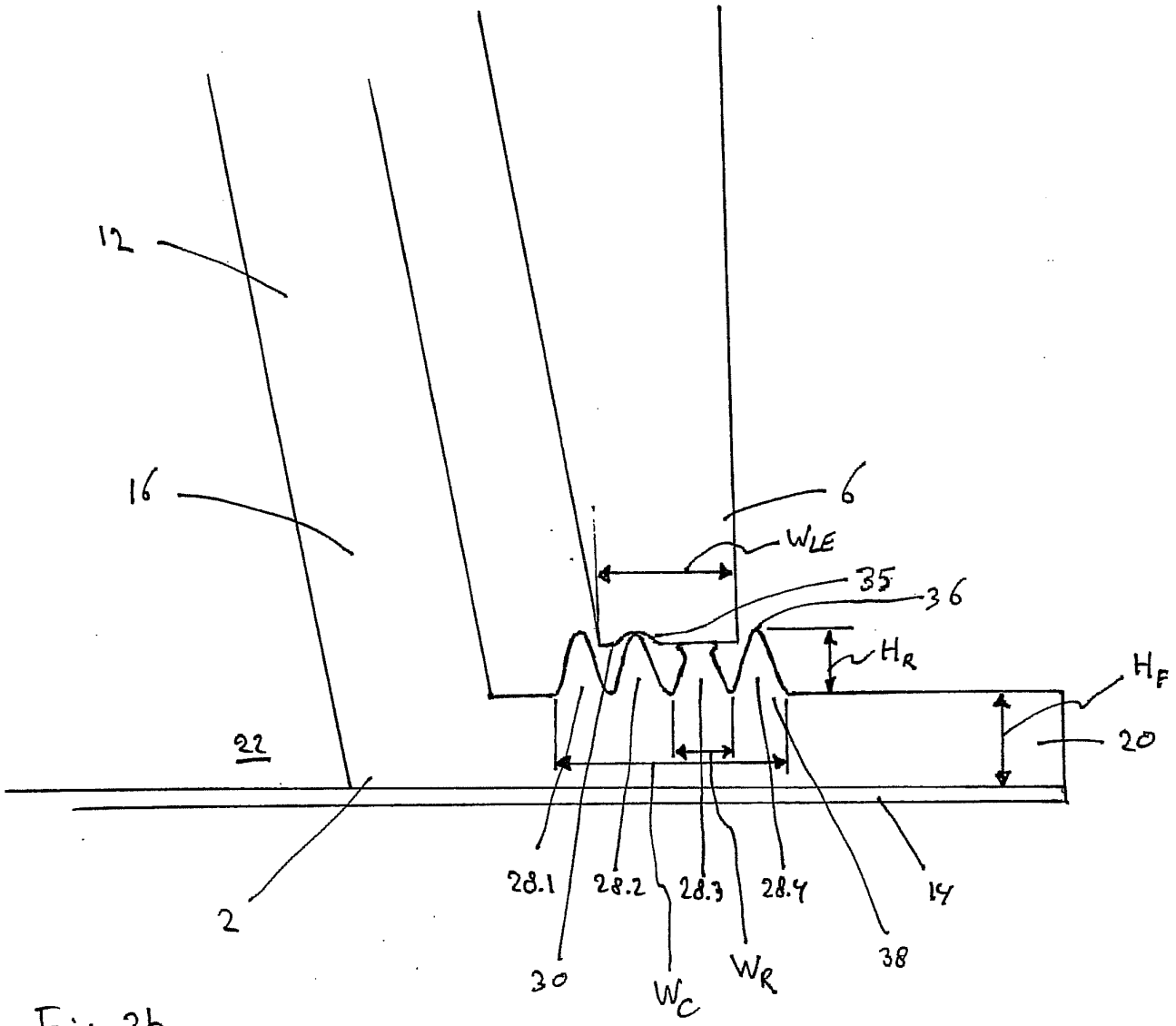

Fig. 3b

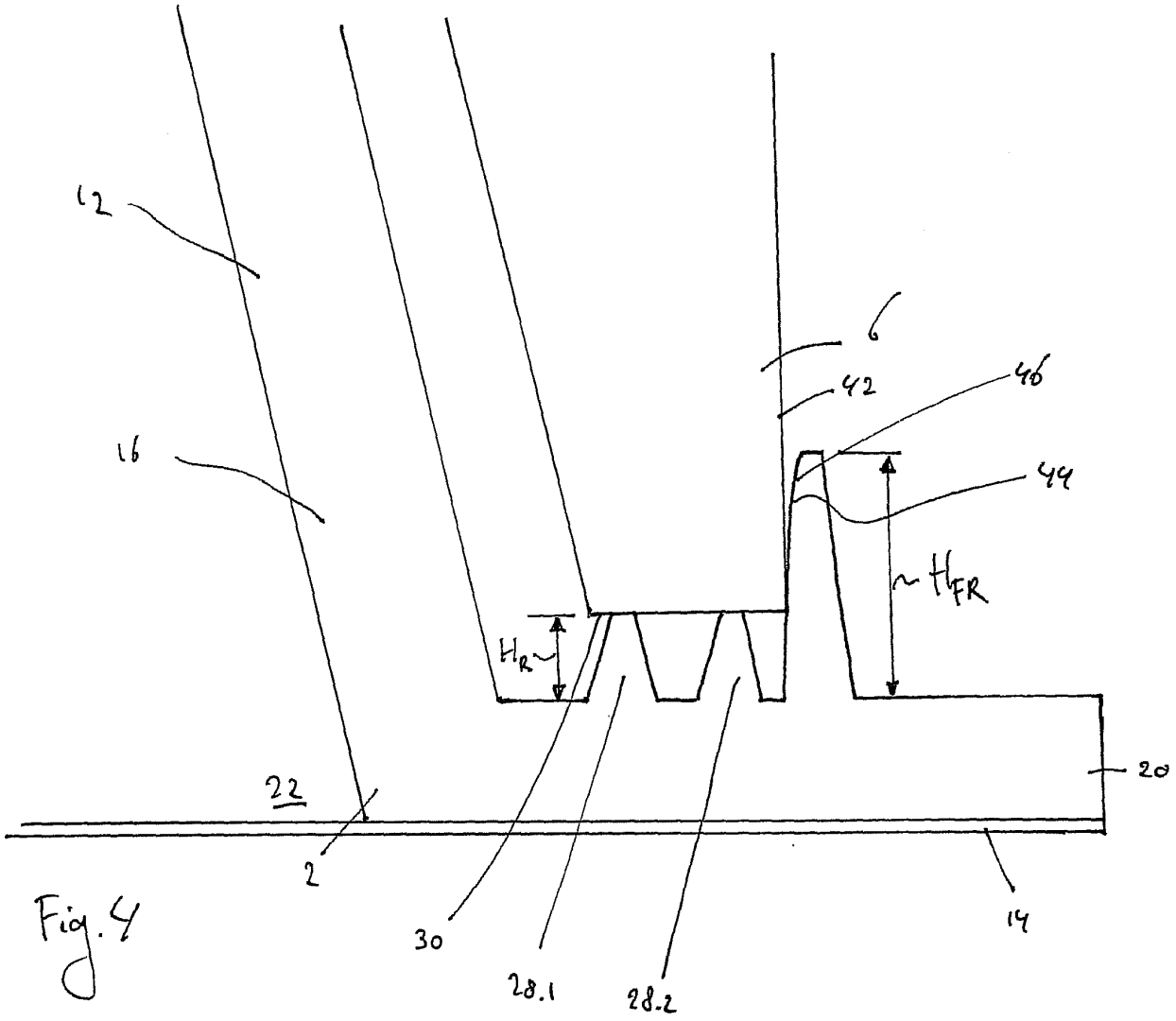

Fig. 4

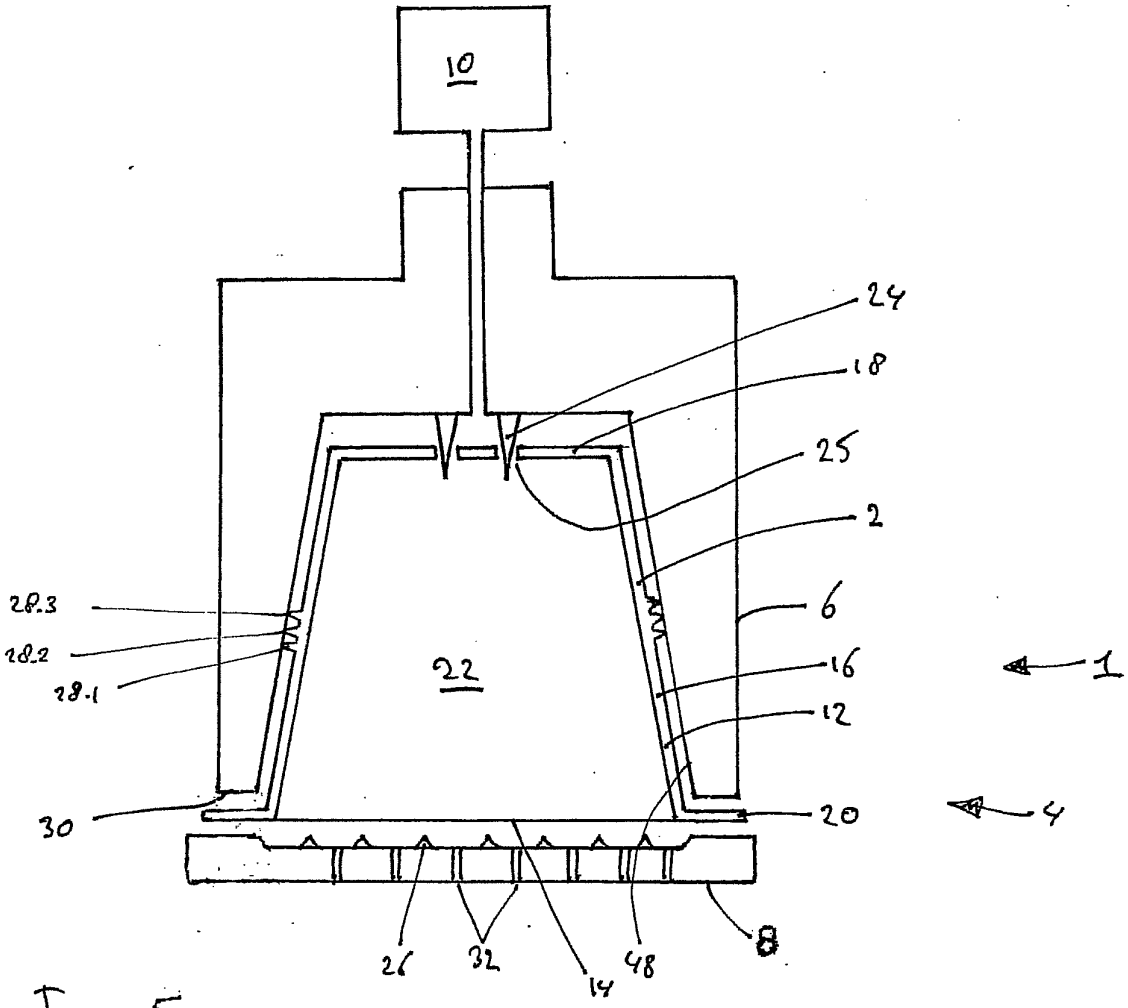

Fig. 5a

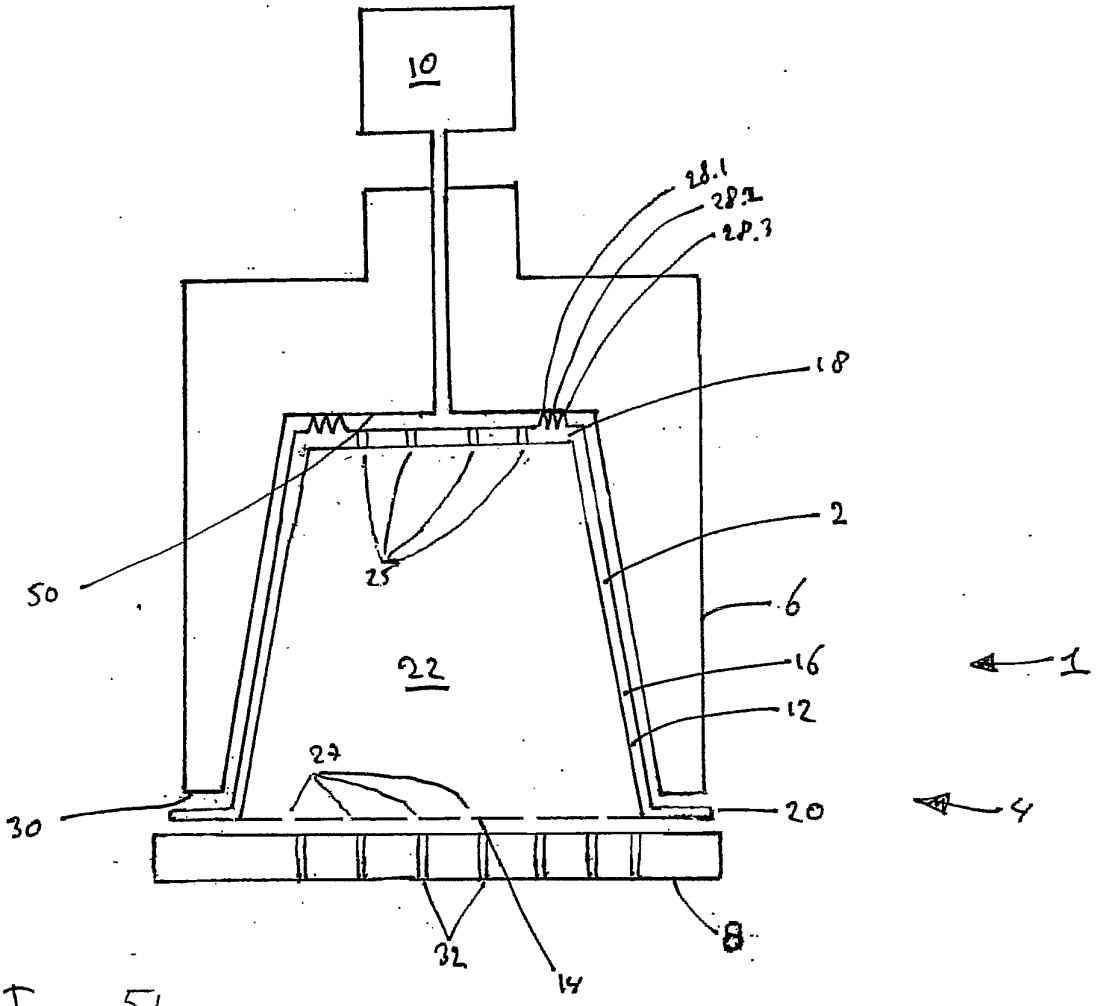

Fig. 5b

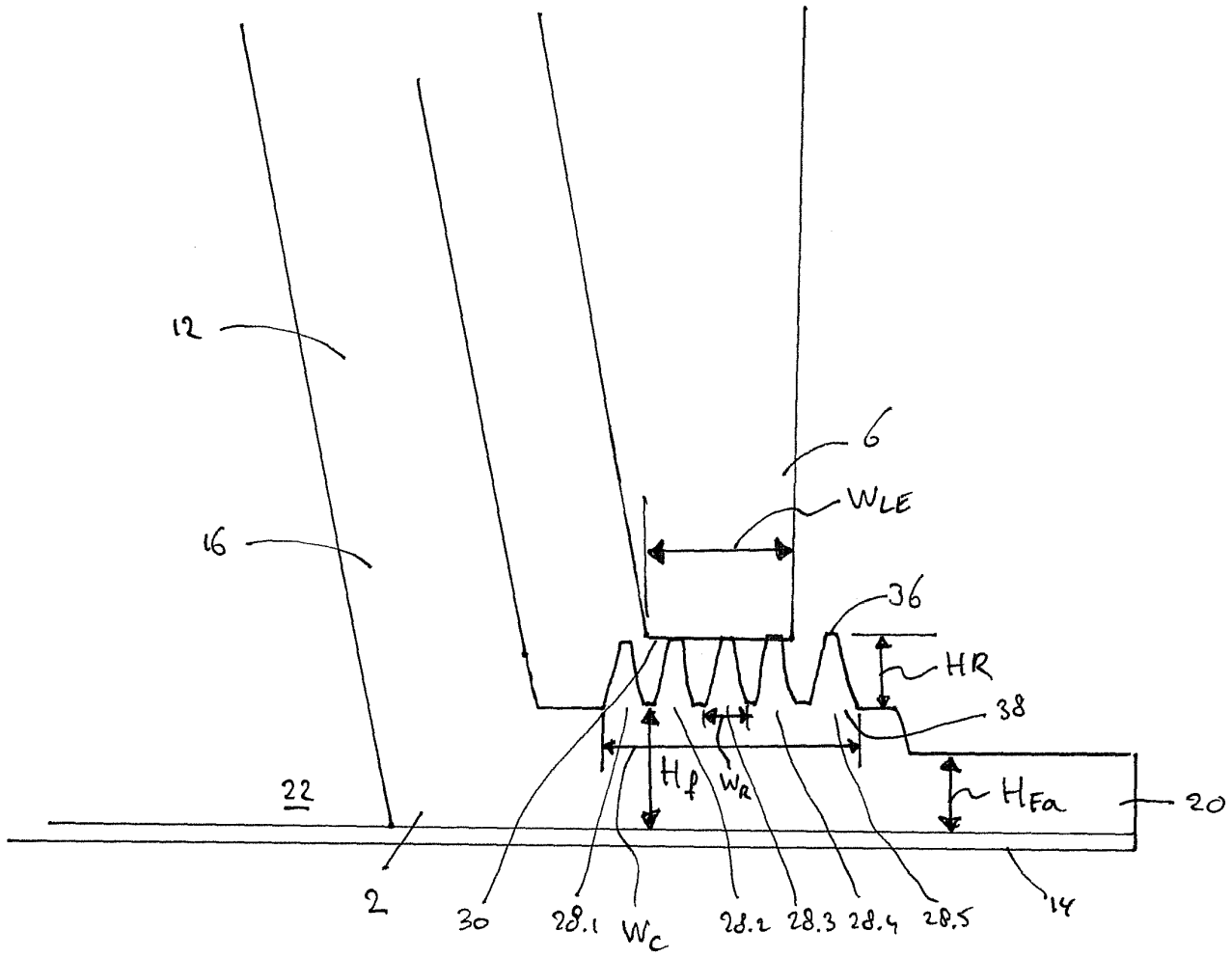

Fig. 6a

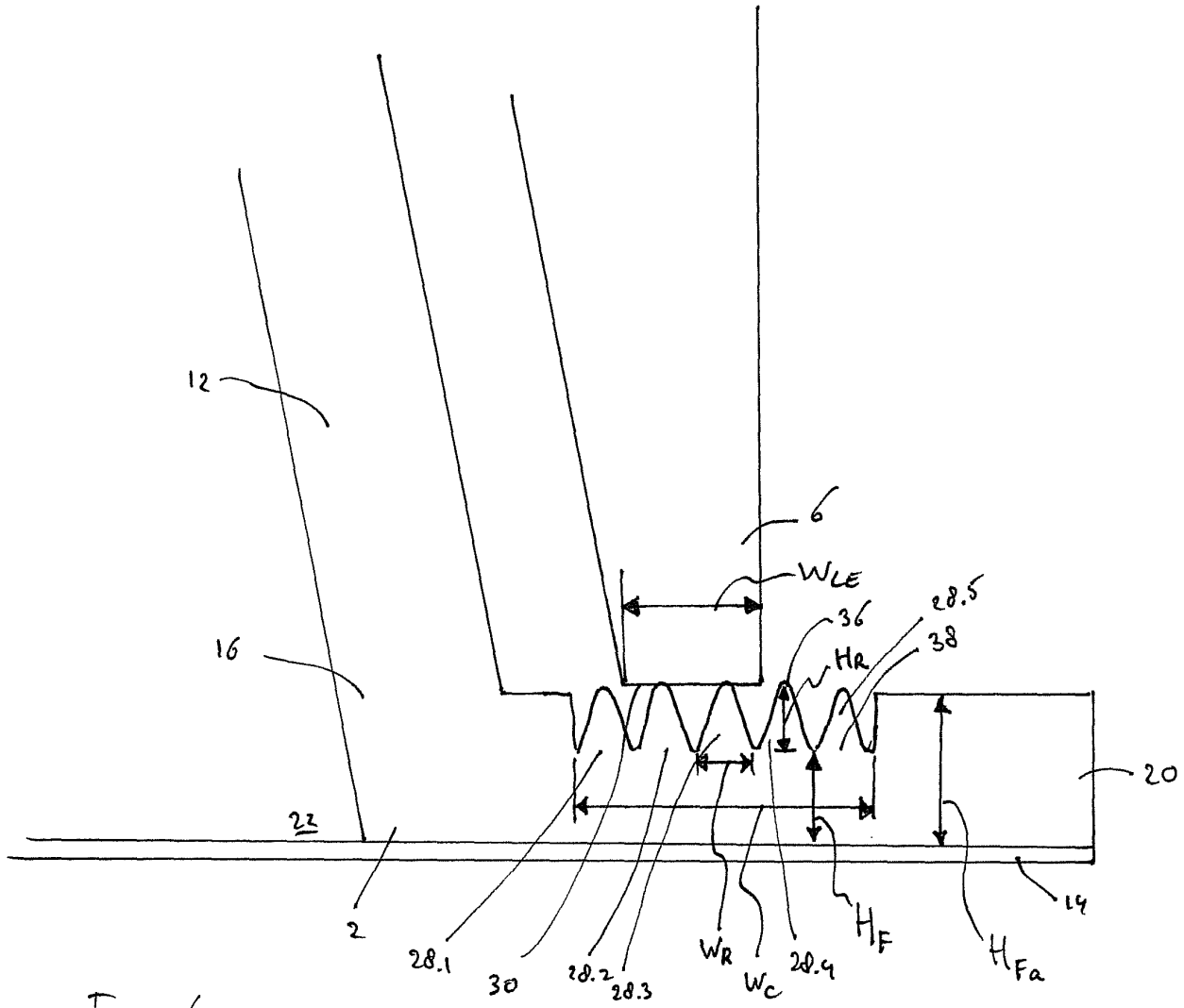

Fig. 6b