A. G. LIEBMANN.

ADJUSTABLE RAIL CHAIR.

APPLICATION FILED JULY 8, 1913. RENEWED JUNE 30, 1914.

1,126,510. Patented Jan. 26, 1915.

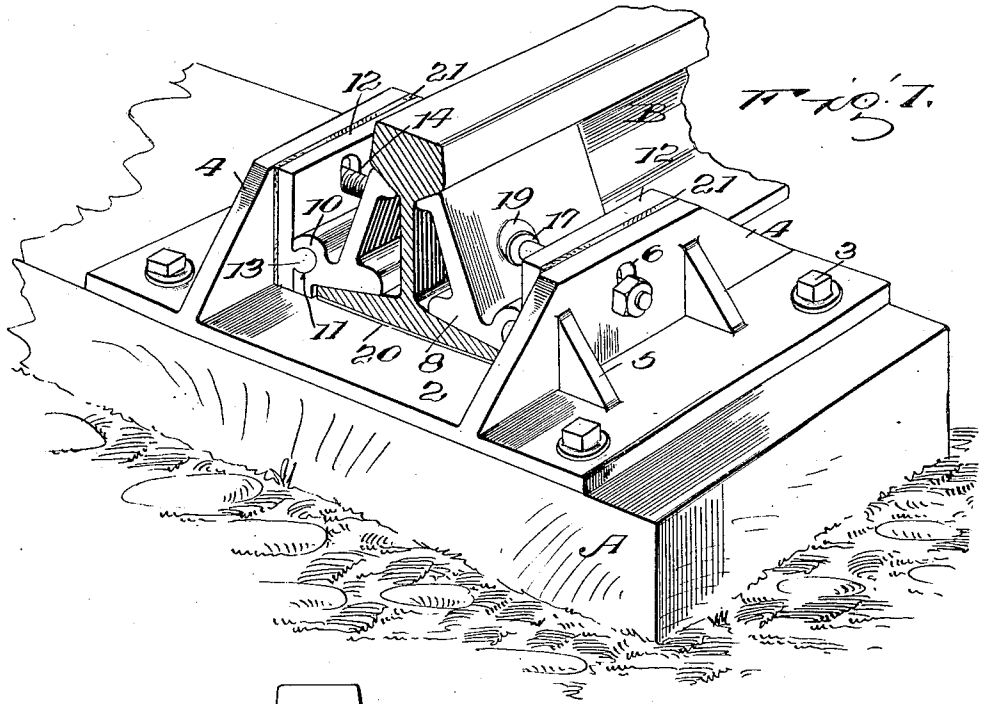

Fig. 1.

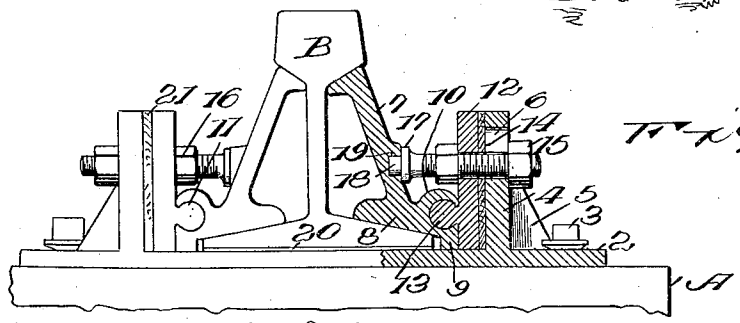

Fig. 2.

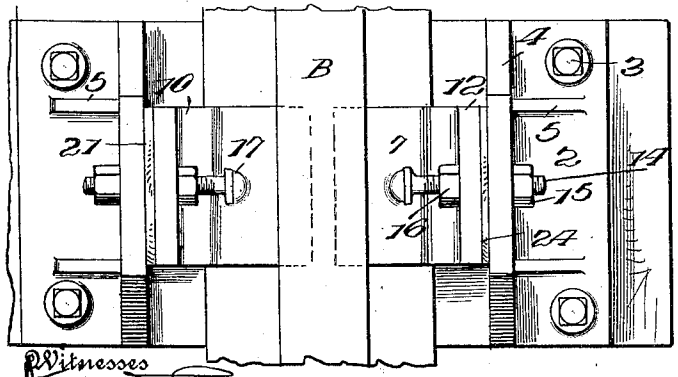

Fig. 3.

Inventor

A. G. Liebmann

Witnesses

Ferdinand Espey

[illegible]

By

[illegible]

Attorneys.

THE NORRIS PETERS CO., PHOTO-LITHO., WASHINGTON, D. C.

UNITED STATES PATENT OFFICE.

AUGUST G. LIEBMANN, OF BUTTE, MONTANA, ASSIGNOR TO VIGNOLES RAIL CHAIR COMPANY, OF NEW YORK, N. Y., A CORPORATION OF DELAWARE.

ADJUSTABLE RAIL-CHAIR.

1,126,510. Specification of Letters Patent. Patented Jan. 26, 1915.

Application filed July 8, 1913, Serial No. 777,955. Renewed June 30, 1914. Serial No. 848,308.

To all whom it may concern:

Be it known that I, AUGUST G. LIEBMANN, citizen of the United States, residing at Butte, in the county of Silverbow and State of Montana, have invented certain new and useful Improvements in Adjustable Rail-Chairs, of which the following is a specification.

This invention relates to railway track appliance and particularly to rail chairs for supporting and holding the rails in resilient stable position upon the ties.

At the present time it is the practice on almost all of the railroads of the United States to use spikes for attaching the rails to the ties. This practice is disadvantageous for many reasons. The lateral thrust upon the rails, particularly on curves, tends to cause the spikes to wear into the tie and enlarge the openings formed by the spikes and this lateral thrust further tends to tip the rail upon the edge of one base flange, thus acting to either withdraw the spikes or at least loosen them. The reason for this is that the spikes only grip the margin of the rail base and there is nothing to support and buttress the head of the rail and prevent any tipping action. Another trouble incident to the use of spikes as a means for attaching rails to ties is that it is extremely difficult either to adjust the rail for gage or to use shims for the purpose of vertically adjusting the rail. This vertical and lateral adjustment of the rail is more or less constantly necessary and particularly on roads where the rails are subjected to great strain and in localities where the roadbed is subjected to the raising and lowering action of frost and thaw. In case one section of the track is raised or a section is lowered the spikes will either be withdrawn or partly withdrawn or the rail base will be too firmly gripped as with screw-spikes in direct contact with the rail, and said rail will be sheared.

The primary object of the invention is the provision of means whereby a rail may be held firmly upon the ties without the use of spikes in direct contact with the rail and whereby primary and secondary fastening means are provided, the primary means holding the chair to the tie, while the secondary means holds the rail to the chair.

A further object is to so construct the secondary fastening means that the rail may be either laterally or vertically adjusted within the chair and held firmly in its adjusted position.

Still another object is to provide a chair and rail-engaging means so constructed that the rail-engaging means may be shifted vertically to accommodate any desired thickness of shim beneath the rail base and whereby lateral or side shims may be used for the purpose of laterally adjusting the rail to bring it to gage and impart the desired resiliency to the lateral strains of the rail.

A further object is to provide such simple means for engaging the rail that while it shall be securely held in its adjusted position the rail-engaging devices may be readily released and the rail adjusted without the necessity of withdrawing the permanent fastenings holding the chair to the tie.

The invention is illustrated in the accompanying drawings, wherein:

Figure 1 is a perspective view of a portion of a railroad tie and rail with the improved chair in place thereon; Fig. 2 is a vertical transverse section through the tie and chair; and Fig. 3 is a plan view of the construction shown in Figs. 1 and 2.

Referring to these drawings, A designates a tie of usual form which may be made of suitable material, but which is usually of wood.

B designates the rail which may be of any standard shape.

The rail-supporting means includes a bed plate 2 having a width equal preferably to the width of the tie and having any suitable or desired length, this bed plate being formed with perforations in its corners for the passage of screw spikes 3. By making the bed plate of a width equal to that of the tie a firm foundation is secured for the rail and the bed plate is so firmly supported that it will not be forced into the tie and the fibers of the tie thus cut. This will considerably prolong the life of the tie.

The bed plate is formed with the oppositely disposed, upwardly extending abutments 4. These abutments are braced by means of the buttressing webs 5. The inner face of each abutment is vertical and flat and each abutment at its middle is formed with a vertical slot 6.

Disposed against the rail on each side thereof and bearing at their upper edges beneath the head of the rail are the rail

braces 7. These rail braces are downwardly and outwardly inclined, and each rail brace is formed at its lower end with an enlarged head 8 having an inclined under face which bears against the upper face of the rail base. The outer edge of this head 8 has a downwardly extending rib 9 which engages over the side edge of the base flange of the rail, as illustrated in Fig. 2. This enlarged head 8 is also formed integral with a bulb 10 which is longitudinally bored, as at 11.

Disposed between each rail brace 7 and the corresponding abutment 4 is a plate 12 having a flat inside face, the inner face of the plate near its lower edge being formed with a longitudinally extending bulb 13 adapted to fit within the bore 11 of the bulb 10 and interlock therewith. Each plate 12 is formed with a perforation for the passage of an adjusting screw 14. This member 14 is screw-threaded throughout its entire length for engagement with nuts 15 and 16. The inner end of each member 14 is formed with a head 17 having a projecting tenon 18 engageable in a mortise or socket 19 formed in a hub or enlargement projecting from the outer face of the adjacent rail brace 7. The heads 17 bear firmly against the hubs or enlargements and thus a firm bearing is secured between the screws 14 and rail braces.

The adjusting screws 14 pass through the slots 6, and it is obvious, therefore, that a shim 20 of any desired size may be inserted between the upper face of the plate 2 and the underside of the rail B and that the insertion of this shim will lift the rail and with it the rail braces 7, the plates 12 and the adjusting screws 14. After the rail has been raised to its required height by means of the shim 20, the nuts 15 and 16 are turned toward each other until they bind firmly upon the plates 12 and the abutments 4.

When the rail is disposed with its longitudinal axis coincident with a vertical plane disposed midway between the abutments 4, preferably wood shims 21 are used, said shims being preferably of the same thickness, as shown in Fig. 2. When, however, it is desired to shift the rail laterally, the shims 21 are removed and two ships 21 at one abutment are inserted between the other abutment and the corresponding plate 12. After the rail has been shifted and the shims properly adjusted, the nuts 15 and 16 on the screw members 14 are turned up so as to clamp the shim securely between the abutments 4 and the plates 12.

It is to be particularly noted that the lateral adjustment of the rail may be secured by removing the shim 21 at one abutment and so rotating the nuts 15 and 16 co-acting with the other abutment as to laterally shift the adjacent screw 14. Inasmuch as the action of the adjusting screws 14 is very powerful, it is not necessary to secure the services of a section gang with special tools in order to shift the rails to gage. It is obvious, also, that, inasmuch as no spikes have to be withdrawn, it is possible for one man to adjust the rail-holding means and insert a proper shim beneath the rail and again adjust the mechanism so as to hold the rail base in firm engagement with the shim and hold the rail in its adjusted position for gage.

The construction of rail chair just described is a particularly durable type for mountain lines. The chair is particularly solid and holds the rail with such stability that it is adapted for relatively high train speeds on mountain grades with modern power and equipment. Furthermore, it will be noted that the rail is held both at its head and base and that any tipping thrust is transmitted from the rail head to the base thereof and to the lower portion of the abutment 4, this tipping thrust being further resisted by the webs or buttresses 5. None of the tipping thrusts will affect the screws 14, as the tipping thrust of the rail is supported by engagement of the lower end of the rail brace with the plate 2 and with the plate 12. By providing an abutment 4 having a flat inner face and a relatively extended surface and a plate 12 facing the abutment having a flat face and a relatively extended surface, the lateral strain exerted upon the shim 21 is distributed, thus preventing the shim from becoming quickly deteriorated.

The official report of the Block Signal and Train Control Board of the Interstate Commerce Commission, dated June 29, 1912, calls particular attention to the failure of all track systems at present in use to resist the wheel flange pressure against the head of the rail and states that it is not sufficient that the ties should be able to support the vertical loads and resist direct horizontal thrust, but the overturning movement of the rail must be resisted, and that it is particularly necessary that suitable fastening means be provided for not only holding the rail to the tie, but resisting this tipping movement of the rail. The report further states that the means of adjustment of rail tie must admit of the blocking up of the rail for shimming, and that adequate means should be provided for lateral shimming whereby the gage of the rails may be adjusted and that this means for securing lateral adjustment of the rails should not involve lost motion or change of adjustment. It may be pointed out that the rail chair heretofore described conforms to the requirements referred to in this report and at the same time the fastenings are not of a complicated nature, but

such as may be readily operated by one laborer. Further, it may be pointed out that the primary fastenings 3 whereby the chair is held to the tie need not be removed for either lateral or vertical shimming.

What I claim is:—

1. A rail chair comprising a bed plate having upstanding abutments, rail braces adapted to engage a rail and disposed between said abutments, vertically disposed plates each confronting one of said abutments and each movable vertically with the corresponding rail brace, and a screw passing through each one of the abutments and the corresponding plate.

2. A rail chair comprising a bed plate having upstanding abutments, rail braces adapted to engage a rail and disposed between said abutments, vertically disposed plates each confronting one of said abutments and each movable vertically with the corresponding rail brace, and a screw passing through each one of the abutments and the corresponding plate, said screw engaging at its inner end with the corresponding rail brace.

3. A rail chair comprising a base plate having upstanding abutments each of said abutments being vertically slotted, rail braces disposed between the abutments and adapted to engage opposite sides of a rail, a vertical plate disposed on the inside face of each abutment and engageable with the adjacent rail brace for vertical movement, screw-threaded members passing each through the slot of one of said abutments and through the corresponding plate and engaging with the corresponding rail brace, and nuts engaging the screw-threaded members on the outside of the abutments and on the inside of the plates.

4. The combination with a tie and a rail, of a bed plate upon which the rail rests having upstanding abutments, each of said abutments being vertically slotted, rail-engaging members disposed one on each side of the rail, means for holding a shim between the rail-engaging members and the abutments, and means for clamping said shims in place.

5. A rail chair comprising a bed plate having upstanding abutments each vertically slotted, oppositely disposed rail braces adapted to engage with the head and base of a rail, each rail base being formed with a bulb having a longitudinally extending bore, plates disposed one inward of each of the abutments and confronting the same, each plate having a bead adapted to engage with the bore of the corresponding rail base bulb, screw-threaded members passing each through the slot of the corresponding abutment and through the corresponding plate and engaging with the corresponding rail brace, and nuts on said members and bearing against the plates and said abutments, respectively.

6. A rail chair including a bed-plate having upstanding abutments, rail securing members adjustable laterally and vertically with respect to the bed-plate, side shims adapted to be interposed between the rail securing members and abutments, and means for locking the rail securing members to a rail and the side shims to the abutments in different positions of vertical and lateral adjustment of said rail securing members.

7. A rail chair including a bed-plate having oppositely disposed upstanding abutments, rail securing members adjustable laterally and vertically between the abutments, wood side shims adapted to be interposed between the rail securing members and the abutments, means for locking the rail securing members to a rail and holding said rail securing members in different positions of vertical and lateral adjustment, said locking means also serving to prevent displacement of the side shims.

8. In a rail chair, the combination with a bed-plate having upstanding abutments, of a rail adapted to rest on the bed-plate or on a horizontal shim between said abutments and adjustable laterally and vertically with respect to the bed-plate, rail-securing members bearing against the rail on opposite sides thereof, plates co-acting with the abutments, vertical side shims adapted to be interposed between the plates and abutments, and means piercing the plates, abutments and side shims and engaging the rail securing members for holding the rail in different positions of lateral and vertical adjustment.

9. In a rail chair, the combination with a bed-plate having spaced upstanding abutments, of a rail resting on the bed-plate or on a shim between the abutments and adjustable laterally and vertically with respect to the bed-plate, plates co-acting with the abutments, rail braces bearing against the sides of the rail and having pivotal connection with the adjacent plates, side shims adapted to be interposed between the abutments and plates, and means piercing the abutments, plates and side shims and engaging the rail braces for holding the rail in different positions of lateral and vertical adjustment.

In testimony whereof I affix my signature in presence of two witnesses.

AUGUST G. LIEBMANN. [L. S.]

Witnesses:
WM. NUSS,
W. H. MALONEY.

Copies of this patent may be obtained for five cents each, by addressing the "Commissioner of Patents Washington, D. C."