PCT WORLD INTELLECTUAL PROPERTY ORGANIZATION
International Bureau

INTERNATIONAL APPLICATION PUBLISHED UNDER THE PATENT COOPERATION TREATY (PCT)

(51) International Patent Classification 3 : F24J 3/02 — A1

(11) International Publication Number: WO 82/ 03677

(43) International Publication Date: 28 October 1982 (28.10.82)

(21) International Application Number: PCT/US82/00444

(22) International Filing Date: 12 April 1982 (12.04.82)

(31) Priority Application Number: 253,818

(32) Priority Date: 13 April 1981 (13.04.81)

(33) Priority Country: US

(71) Applicant: ALTAS CORPORATION [US/US]; 500 Chestnut Street, Santa Cruz, CA 95060 (US).

(72) Inventors: GRUNES, Howard, E. ; 237 Trevethan Avenue, Santa Cruz, CA 95062 (US). MORRISON, Dennis, J. ; 745 Pine Street, Santa Cruz, CA 95062 (US).

(74) Agents: SEKIMURA, Gerald, T. et al.; Limbach, Limbach & Sutton, 2001 Ferry Building, San Francisco, CA 94111 (US).

(81) Designated States: AT (European patent), AU, BE (European patent), CH (European patent), DE (European patent), FR (European patent), GB (European patent), JP, LU (European patent), NL (European patent), SE (European patent).

Published
With international search report.

(54) Title: JACKETED TANK HERMETIC DRAIN-BACK SOLAR WATER HEATING SYSTEM

(57) Abstract

An improved indirect, drain-back, solar water heating system of the type wherein a heat transfer fluid (16) is circulated by a pump (26) from a heat exchanger (12, 14), where the fluid is cooled, to a heat collector (10), where the fluid is heated, and back to the heat exchanger, wherein the improvement includes a sealed, annular jacket (14), heat exchanger, and a venting structure (27, 40, 46) coupled to a hot water storage tank (12) which permits transfer fluid to drain back from the heat collector when the pump is unenergized.

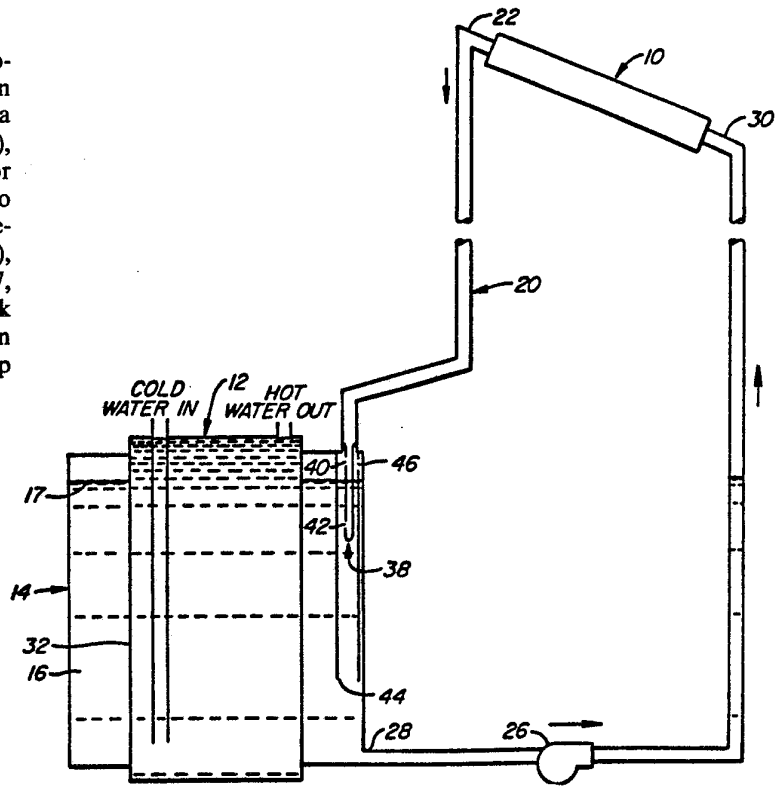

FOR THE PURPOSES OF INFORMATION ONLY

Codes used to identify States party to the PCT on the front pages of pamphlets publishing international applications under the PCT.

AT	Austria
AU	Australia
BB	Barbados
BE	Belgium
BG	Bulgaria
BR	Brazil
CF	Central African Republic
CG	Congo
CH	Switzerland
CM	Cameroon
DE	Germany, Federal Republic of
DK	Denmark
FI	Finland
FR	France
GA	Gabon
GB	United Kingdom
HU	Hungary
IT	Italy
JP	Japan
KP	Democratic People's Republic of Korea
KR	Republic of Korea
LI	Liechtenstein
LK	Sri Lanka
LU	Luxembourg
MC	Monaco
MG	Madagascar
ML	Mali
MR	Mauritania
MW	Malawi
NL	Netherlands
NO	Norway
RO	Romania
SD	Sudan
SE	Sweden
SN	Senegal
SU	Soviet Union
TD	Chad
TG	Togo
US	United States of America

Description
Jacketed Tank Hermetic Drain-Back Solar Water Heating System

Technical Field

The present invention relates generally to heating systems and, in particular, to indirect drain-back solar water heating systems.

The typical solar heating system utilizes a solar collector, which can be a panel positioned for maximum exposure to solar energy, and a means for transferring the heat absorbed by the collector to the subject matter to be heated. To this end, systems which have been developed to implement such heat transfer may be categorized as indirect or direct heating systems.

In direct heating systems, the subject matter to be heated, e.g. water, air, or other fluids, is circulated through the solar collector where there is a direct transfer of absorbed heat to the subject matter.

In the indirect systems, there is a closed solar collector loop for absorbing heat from the collector and a heat exchanger for transferring heat from the solar collector loop to the subject matter to be heated. The solar collector loop utilizes a heat transfer fluid which is circulated through the solar collector, where the fluid absorbs heat from the collector, and thence into the heat exchanger. The heat exchanger can be a part of the solar collector loop shaped, for example, in a coil, and positioned to be surrounded by the subject matter to be heated. Heat can thereby be transferred from the circulating heat transfer fluid through the walls of the coil to the surrounding subject matter. Other heat exchanger configurations include the use of a reservoir as part of the solar collector loop for storing heated heat

BUREAU OMPI WIPO INTERNATIONAL

transfer fluid. Disposed within the reservoir is a second loop, through which is circulated the subject matter to be heated. The loop is shaped and positioned so that heat from the heat transfer liquid within the reservoir is transferred through the walls of the second loop to the circulating subject matter to be heated.

Solar heating systems may be characterized as non-draining or draining. Draining systems may be further characterized as drain-back or drain-down. The difference between the systems has to do with solar heating operation when the solar energy available is insufficient to prevent the fluid in the collector from freezing, or when the subject matter to be heated has already reached the maximum desired temperature and continued absorption of heat by the collector will cause the fluid in the collector to boil or to generate excessive temperature or pressure.

In the non-draining systems, the collector is always filled with fluid. In order to prevent freeze damage, either a non-freezing fluid is used or the fluid is circulated when it approaches the freezing temperature, drawing some heat from the heated subject matter, thereby keeping the fluid above the freezing temperature, but also causing heat loss.

The use of non-freezing fluids in the collector loop usually requires the use of a double-walled heat exchanger between the collector fluid and the heated subject matter to insure no contamination of the heated subject matter, which lowers energy collection efficiency.

In order to obtain boil-over protection, high-boiling temperature fluids, such as silicone or hydrocarbon oils are used, or the excess pressure developed is either vented to the atmosphere or transferred to a holding reservoir.

BUREAU OMPI WIPO INTERNATIONAL

In drain down systems, the heat transfer fluid is drained from the collector and discarded whenever the fluid approaches the fluid freezing temperature. Boil-over protection is usually achieved in the same way it is for a non-draining system, that is, by venting the fluid when it boils.

In drain-back systems, the heat transfer fluid is drained out of the collector and transferred to a reservoir and is replaced by a gas when there is insufficient heat available, or the subject matter to be heated has reached its maximum desired temperature. The gas will neither freeze when outside temperatures are very cold nor create excessive pressure when excess temperatures are generated in the solar collector.

The present invention is directed to draining systems and, in particular, to indirect drain-back systems.

Direct heating draining systems have the primary advantage of not requiring a heat exchanger between the collector fluid and solar storage. They are usually drain down systems and have the disadvantage of needing more complex controls and components than other systems. Direct heating draining systems require special electrically actuated hardware to insure correct draining operation. If these systems fail, freezing or boiling can occur. Additionally, by circulating potable water, for example, through the collectors, mineral deposits can eventually build up inside the collector passage which can reduce performance. Furthermore, subjecting the collectors and supply plumbing to water main pressure increases the possibility of leaks.

It is easier to achieve good thermal performance with draining water systems than non-draining anti-freeze systems. Water is easier to pump and has better heat transfer characteristics than antifreeze solutions.

BUREAU OMPI WIPO INTERNATIONAL

The necessity for double walled heat exchangers is an additional obstacle to high efficiencies with anti-freeze systems. Also, in non-draining systems, the fluid in the collectors is cooled each night requiring additional energy to reheat it before energy collection can resume.

Boiling of the collector fluid, which is a concern in non-draining closed loop system and in some drain down systems is not a concern with drain-back systems. In drain-back systems it is easy to avoid introducing fluid to the collector when boiling could occur. When boiling occurs in small, residential, non-draining antifreeze systems, where it is not usually economical to incorporate sophisticated boiling safeguards the antifreeze solution is forced out of the system through the pressure relief valve. The system must then be refilled before energy collection can resume. Drain down systems usually refill themselves when boiling occurs but provisions must be made to direct the hot fluid to a safe place and vents must function properly.

Indirect drain-back systems overcome the problems of antifreeze systems and direct heating draining systems. Whenever the pump is not running, the system is in the drained mode, the possibility of freezing and boiling is virtually eliminated even if the pump fails.

Indirect drain-back systems employ a single walled heat exchanger between the heat transfer fluid in the collector loop and the subject matter to be heated, e.g. potable water. This allows the collector loop to operate at low pressure in a closed configuration eliminating the need for solenoid valves or vents. Also since the collector loop is closed, mineral deposits are not a problem.

BUREAU OMPI WIPO INTERNATIONAL

Typically, these systems employ a pump, differential temperature controller, heat exchanger and fluid reservoir. The subject matter to be heated is held in a storage tank. When the collector temperature is hotter than the storage temperature and the storage temperature is below a preset maximum (usually 180 Degrees F), the controller turns the pump on. Heat transfer fluid is pumped from the fluid reservoir to the collector and establishes a loop between the reservoir and the collector. Heat energy is then transferred from the fluid reservoir to the storage tank through a single-walled heat exchanger. When energy can no longer be collected, the pump shuts off and the fluid drains back into the reservoir. In this way, there are no freezing or boiling problems since the fluid is not allowed into the collectors if they are too cold or if the fluid is too hot.

Indirect drain-back systems can be set up in either a vented or hermetic configuration. In a vented configuration, the reservoir is vented to the atmosphere causing the system to operate at atmospheric pressure. In the hermetic configuration, the reservoir is sealed with a gas space at the top. The hermetic mode eliminates the need to add make-up heat transfer fluid to the collector loop since no evaporation can occur. Also corrosion is reduced since no air can enter the system. Plain steel surfaces can therefore be used. A hermetic system must, however, be designed to accommodate pressure variations caused by expansion of the fluid in the loop and by the vapor pressure of the fluid.

One configuration of the previous indirect drain-back systems uses an external heat exchanger. The heat exchanger can be a coil submerged in the drain-back reservoir. A second pump is used to circulate the

BUREAU OMPI WIPO INTERNATIONAL

subject matter to be heated; e.g., potable water, through the heat exchanger. Alternatively, the heat exchanger could be set up to thermosyphon; i.e., to induce fluid flow using the property that hot fluids rise and cold fluids sink. The main advantage of an external heat exchanger is that it can be added to an existing tank.

Alternatively, a heat exchange coil which is part of the collector loop and which is submerged within the storage tank is used with an indirect drain-back system. This approach eliminates the need for two pumps and can result in a more compact arrangement. In this configuration, a separate reservoir is located outside the storage tank.

The problem with indirect drain-back systems is that they require a separate fluid reservoir and a heat exchanger which can impose thermal performance penalties. With the reservoir separate from the storage tank, heat losses will occur from it. A heat exchanger between the collector loop and storage will cause the collectors to operate hotter than they would without a heat exchanger, reducing efficiency.

Disclosure of the Invention

The foregoing and other problems of prior art solar water heating systems are overcome by the present improved heating system of the type having a heat collector, a heat exchanger, a heat transfer fluid and means for circulating the fluid through the heat collector, where the fluid is heated, to the heat exchanger, where the fluid is cooled, and back to the heat collector. The improvement comprises a heat exchanger in the form of a sealed, hollow, annular jacket for containing a portion of the fluid and a gas which is lighter than the fluid, the jacket having an

BUREAU OMPI WIPO INTERNATIONAL

outlet located below the surface of the heat transfer fluid which is contained in the jacket, and an inlet, and wherein the circulating means include pump means connected between the outlet of the jacket and the heat collector. A return pipe is communicatively connected between the heat collector and the jacket inlet. Further, the pump means, when energized, circulate heat transfer fluid from the jacket outlet to the heat collector and when unenergized, allow the heat transfer fluid flow in the reverse direction. The pump means, the jacket and the return pipe together are capable of containing all of the heat transfer fluid when the pump means are unenergized.

When the jacket inlet is located below the heat transfer fluid surface in the jacket, the jacket further includes a vent which is positioned above the heat transfer fluid surface and communicatively coupled to a point on the return pipe which is at least as high as the vent.

The jacket is positioned about the storage tank and made an integral part of the storage tank, both physically and thermally.

The tank jacket forms an annular volume which becomes both the solar fluid reservoir and the heat exchanger. Although the jacketed tank approach requires a special tank, it is the least complex when compared to existing indirect drain-back systems. It has the advantage of continuous passive thermal coupling between the solar loop water and potable water, thereby making the solar loop fluid an integral part of solar storage. It also makes full use of the tank wall as the heat exchange surface, resulting in material economy. As such, it can be a hermetic system so that plain steel surfaces, for example, can be used.

BUREAU OMPI WIPO INTERNATIONAL

Of the total storage tank/jacket volume a significant volume of heat transfer fluid can be held in the drain back reservoir or jacket which, along with the large heat exchange surface, reduces the heat exchanger performance penalty. Standby thermal losses are no greater than from an ordinary storage tank. Larger jacket proportions also allow a smaller pressure vessel since only the storage tank is subjected to water main pressure, when potable water is the subject matter to be heated. Furthermore simplicity of design makes the jacketed tank drain back approach more economical to produce than the other systems.

It is therefore an object of the present invention to provide an indirect drain-back solar water heating system including an annular jacket for storing heat transfer fluid which is an intergral part of the storage tank.

It is a further object of the present invention to provide an indirect drain-back solar water heating system wherein heat transfer fluid which is to be circulated to the collector is drawn from the bottom of the annular jacket, and wherein heated heat transfer fluid from the collector is supplied to the annular jacket below the surface of the fluid contained within the jacket.

It is a still further object of the present invention to provide an improved indirect drain back solar water heating system which includes a vent communicatively coupled to the solar loop, which permits the reverse flow of heat transfer fluid from the solar collector when the pump is unenergized so that the heat transfer fluid is drained from the collector, even when the fluid is returned to a point in the jacket below the surface of the fluid contained in the jacket.

BUREAU OMPI WIPO INTERNATIONAL

It is a further object of the present invention to provide an indirect drain-back solar water heating system wherein the venting configuration includes a dip tube and a containment tube positioned in the solar loop to reduce mixing and heat-transfer-fluid-flashing effects present in the operation of drain back systems.

It is another object to the present invention to provide an indirect drain-back solar water heating system wherein the heat transfer fluid is water.

The foregoing and other objectives, features and advantages of the invention will be more readily understood upon consideration of the following detailed description of certain preferred embodiments of the invention, taken in conjunction with the accompanying drawings.

Brief Description of the Drawings

Figure 1 is a simplified diagram of the present invention.

Figure 2 is a detailed perspective view of the present invention including one embodiment of the vent means.

Figure 3 illustrates an alternative configuration of the vent means.

Best Mode for Carrying Out the Invention

Referring to Figure 1, the jacketed tank drain back solar water heating system will be described in general. A collector 10 is disposed so that it can absorb solar energy. A storage or water supply tank 12 is located below the level of the collector 10. Disposed about the storage tank 12 is an annular, sealed, hollow jacket 14. The wall of the storage tank 12 and the inner wall of the annular jacket 14 are a common wall. Contained within the annular jacket is a

BUREAU OMPI WIPO INTERNATIONAL

heat transfer fluid 16 and a gas 18 which is lighter than the heat transfer fluid. The annular jacket 14 is connected to the collector 10 by a return pipe 20 which is connected between the collector output 22 and the jacket inlet 24. The jacket inlet 24 is positioned toward the top of the jacket. A pump means 26 is connected between the outlet of the jacket 28 and the inlet 30 to the collector.

Temperature sensing and controller means, not shown, are connected to measure the temperature of the heat transfer fluid exiting the jacket and the collector, and energize or de-energize the pump 26 accordingly. The pump 26 is energized when the collector temperature is higher than the jacket 28 temperature and the storage tank 12 temperature has not reached its maximum desired level. The pump draws heat transfer fluid from the bottom of the jacket 14 and circulates the heat transfer fluid into the collector 10. At the collector 10, the heat transfer fluid absorbs heat from the collector and is then circulated through the return pipe 20 to the top of the jacket 14. Heat is transferred from the fluid within the jacket to the subject matter within the storage tank by simple convection through the common wall 32 between the storage tank and the annular jacket. When the temperature sensing means determines that the collector temperature is below that of the jacket the pump 26 is shut off.

Referring to Figure 2, the draining of the collector 10 will now be described. Referring specifically to the connection of the return pipe 20 to the jacket 14, one embodiment of a vent means is shown in Figure 2. In this embodiment, the return pipe connects to the jacket inlet 34 which is positioned at some point between the top of the jacket and the outlet of

BUREAU OMPI WIPO INTERNATIONAL

the jacket 28. A vent tube connects the top of the jacket 36 to a point on the return pipe 20 which is at least as high as the top of the fluid level in the jacket. It can also be seen that when the heat transfer fluid 16 is fully drained from the collector 10, the heat transfer fluid level 17 is located at some point below the top of the jacket 14. This permits the gas 18 which fills the space between the heat transfer fluid level in the jacket and the top of the jacket to enter the vent tube 27 and to flow into the return pipe 20 so that the fluid contained within the collector 10 may be drained fully from the collector.

Alternatively, positioning the jacket inlet above the fluid level in the jacket permits the return pipe to serve additionally as a vent. When a jacket inlet location below the fluid level in the jacket is desired, a separate vent above the fluid level should be added. To reduce mixing of the fluid in the jacket and thus enhance thermal stratification and energy collection, it is usually desired that the jacket inlet be positioned below the fluid level in the jacket and toward the lower portion of the jacket.

An alternative method for venting the gas 18 into the return pipe 20 is shown in Figure 3. The return pipe 20 is connected to the top of the jacket 14. A dip tube 38 is communicatively coupled to the return pipe 20 so that one end of the dip tube extends into the jacket 14. The end of the dip tube extending into the jacket is closed. The dip tube 38 has a vent opening 40 which is located above the heat transfer fluid level 17, and a main opening 42 which is located just above the closed end and below the heat transfer fluid level 17. The vent opening 40 is smaller than the main opening 42, with the vent opening 40 being sized so that there is enough back pressure to keep the

BUREAU OMPI WIPO INTERNATIONAL

heat transfer fluid in the collector loop above its vapor pressure so that it will not flash; i.e. boil. A containment tube 44, which extends from the top of the jacket toward the bottom of the jacket contains the dip tube 38. The containment tube 44 is open at its bottom and is sealed to the jacket and around the exterior of the dip tube at its top. The containment tube 44 has a jacket vent 46 which is located above the heat transfer fluid level 17.

The above alternative configuration of the vent means for the present invention improves the coupling of the return pipe 20 and the jacket 14.

In the first configuration, see Figure 2, the heat transfer fluid is pumped from the bottom of the jacket 14, up through the collector 10 and back to the inlet 34 of the jacket. A vent tube 27 connects the gas space at the top of jacket to the return pipe 20 at a point above the top of the jacket. While in operation, unless the flow rate is perfectly balanced, the vent tube 27 will either expell heat transfer fluid into the top of the tank or suck gas into the return pipe 20. Both of these cause mixing which results in destratification of the storage tank and reduced system performance. Expelling water through the vent tube 27 is similar to pumping water from the bottom of the jacket to the top, as in Figure 1. If the storage 12 tank is highly stratified (caused by drawing off some hot water from the top and replacing it with cold water at the bottom), and there is a small temperature rise through the collector 10, then hot water at the top will be diluted with colder water. If gas is entrained in the flow within the return pipe 20, gas bubbles will be introduced to the bottom of the jacket and mix the water as they rise to the top. Mixing can also occur on system start up. As the collectors are

BUREAU OMPI WIPO INTERNATIONAL

filled, gas is purged from the lines and some of this will be expelled to the lower section of the jacket, bubble to the top and cause mixing.

When a vaporizable liquid, such as water, is used as the heat transfer fluid, it can flash to vapor in the collector due to low pressure caused by the fluid column "pulling" on the fluid at the system high point. Large pipes are used to facilitate good drainability, there is therefore only a small pressure drop through the flow loop. Pressure in the collectors can be reduced as much as the height of the fluid column between the collectors and storage tanks. For example, if the collectors are 30 feet above the storage tank, and the jacket is at atmospheric pressure (14.7 psia typical) the pressure in the collectors can be 1.66 psia. Under these conditions, the water would flash at approximately 120°F. Flashing is undersirable for several reasons. It may cause fatigue damage to the collectors and piping, it may partially fill the collectors with vapor which would reduce energy collection. Entrained vapor bubbles in the downcoming fluid could increase mixing of the storage tank and the noise could be objectionable.

Returning to Figure 3, the vent opening 40 and the main opening 42 in the dip tube 38 are sized so that there is enough back pressure to keep the water in the collector loop above its vapor pressure so that it will not flash. The size of the openings and the back pressure required depends upon the height of the collectors and the solar loop pressure. If the collectors are high above the storage tank and if the system is at low pressure, more back pressure will be required. Alternatively, if the solar loop is pressurized before it is sealed, very little or no back pressure will be needed to keep the heat transfer fluid above its vapor

BUREAU OMPI WIPO INTERNATIONAL

pressure, hence larger openings can be used. During operation less than 5-10 percent of the fluid flow in the return pipe 20 exits through the vent opening 40 above the water line 17 and the rest exits through the main opening 42 below the water line 17. No significant amount of mixing can occur since the returning water is contained inside the containment tube 44 and flows at low velocity to the bottom of the jacket 14. Furthermore, any gas which is expelled from the collector loop through the dip tube 38 during startup does not disturb the bulk of the water in the jacket since it bubbles up to the top through the containment tube 44. When the pump 26 is shut off, gas is drawn into the piping through the vent opening 40 at the top of the dip tube 38 allowing the collector loop to drain. The containment tube 44 can be insulated or constructed from insulative material to further isolate the entering fluid from the fluid already in the jacket 14.

In particular, the storage tank 12 of the preferred embodiment of the present invention comprises a glass lined steel tank. The jacket 14 is steel. The pump 26 is a high head/low flow rate pump. The heat transfer fluid 16 is plain water. During installation, the jacket 14 is partially filled with plain water. The remainder of the jacket and the return pipe 20 are filled with air or an inert gas, such as nitrogen. In a hermetic configuration, air will quickly become inert as the small amount of oxygen is depleted. When no solar energy is available, the pump 26 is deenergized and the water level is roughly 2 or 3 inches from the top of the jacket 14 to allow for thermal expansion of the water.

The terms and expressions which have been employed here are used as terms of description and not of limitations, and there is no intention, in the use of

BUREAU OMPI WIPO INTERNATIONAL

such terms and expressions of excluding equivalents of the features shown and described, or portions thereof, it being recognized that various modifications are possible within the scope of the invention claimed.

BUREAU OMPI WIPO INTERNATIONAL

Claims

1. An improved heating system of the type having a heat collector, a heat exchanger, a heat transfer fluid and means for circulating the fluid through the heat collector, where the fluid is heated, to the heat exchanger, where the fluid is cooled, and back to the heat collector, the improvement comprising

a heat exchanger in the form of a sealed, hollow, annular jacket for containing a portion of the fluid and a gas which is lighter than the fluid, the jacket having an outlet located below the surface of the heat transfer fluid contained in the jacket and an inlet, and wherein

the circulating means include pump means connected between the outlet of the jacket and the heat collector, and a return pipe communicatively connected between the heat collector and the jacket inlet, and further wherein

the pump means, when energized, circulate heat transfer fluid from the jacket outlet to the heat collector and when unenergized, allow the heat transfer fluid to flow in the reverse direction, and wherein

the pump means, the jacket and the return pipe together are capable of containing all of the heat transfer fluid when the pump means are unenergized.

2. The heating system as recited in Claim 1 wherein the jacket inlet is located above the surface of the heat transfer fluid contained in the jacket.

BUREAU OMPI WIPO INTERNATIONAL

3. The heating system as recited in Claim 1, wherein the jacket inlet is located below the surface of the heat transfer fluid contained in the jacket, and further wherein the jacket further includes a vent above the surface of the heat transfer fluid contained in the jacket, the vent being communicatively coupled by a vent passage to a point on the return pipe which is at least as high as the vent.

4. The heating system as recited in Claims 2 or 3, wherein the jacket outlet is at the bottom of the tank and the jacket inlet is above the outlet.

5. The heating system as recited in Claim 1, wherein the heat collector is a solar collector.

6. The heating system as recited in Claim 1, wherein the heat transfer fluid is a freezable liquid.

7. The heating system as recited in Claim 1, wherein the heat transfer fluid is water.

8. The heating system as recited in Claim 1 further comprising a potable water supply tank which is surrounded by, and in contact with, the heat exchanger jacket.

9. The heating system as recited in Claim 6 further comprising means for sensing and comparing the temperature of the collector with the temperature of the heat transfer fluid exiting the jacket and for deenergizing the pump means when the temperature of the contents of the jacket is equal to or greater than the temperature of the collector.

BUREAU OMPI WIPO INTERNATIONAL

10. The heating system as recited in Claim 3 further comprising a dip tube which is in communication with the return pipe at one end and which extends into the jacket, the dip tube being closed at its other end, a containment tube extending from the top of the jacket toward the bottom and containing the dip tube, the containment tube being open at its bottom and sealed to the jacket and around the exterior of the dip tube at its top, and wherein the jacket vent and the jacket inlet are in the containment tube and the vent passage is in the dip tube.

11. The heating system as recited in Claim 10, wherein the containment tube is insulated.

12. The heating system as recited in Claim 10, wherein the heat transfer fluid is a vaporizable liquid and the vent passage is a predetermined size sufficient to create a fluid back pressure in the return pipe at the collector which exceeds the vapor pressure of the heat transfer fluid within the collector.

BUREAU OMPI WIPO INTERNATIONAL

13. A solar heating system for heating material which is stored in a tank, comprising

solar collector means, having an inlet and an outlet, for collecting heat from solar radiation and for transferring heat to a circulating transfer fluid;

an annular jacket, which surrounds the tank and which is filled with heated transfer fluid and with an inert gas so that heat is transferred from the fluid to the tank and wherein the jacket has an inlet and an outlet port;

supply coupling means for communicatively coupling the outlet of the jacket to the inlet of the solar collector means;

pump means communicatively coupled to the supply coupling means for inducing a flow of the fluid from the outlet port of the jacket and through the solar collector means;

return means, connected between the outlet of the solar collector means and the jacket inlet, for supplying heated fluid from the solar collector means to the jacket, wherein the return means, the jacket supply coupling means and the solar collector means form a collector loop for circulating cooled transfer fluid from the jacket into the collector means to absorb heat from the collector means, and thence into the jacket for transfer of heat to the tank when the pump means are operating, and for supplying inert gas to the collection loop from the jacket, so that the transfer fluid in the solar collector means will drain fully from the collector means into the jacket when the pump means are not operating.

BUREAU OMPI WIPO INTERNATIONAL

14. The solar heating system, as recited in Claim 13, wherein the jacket includes a vent port positioned at the jacket top, and a return port inlet positioned below the vent port, and wherein the return means comprise

a return tube communicatively coupled to the solar collector outlet and to the jacket return port; and

a vent tube positioned above the top of the fluid level in the jacket and communicatively coupled between the jacket vent port and the return tube.

BUREAU OMPI WIPO INTERNATIONAL

15. The solar heating system as recited in claim 13 in which the fluid contained in the jacket is a vaporizable fluid which partially fills the jacket, and wherein the jacket has an inlet at its top, and further wherein the return means comprise

a return pipe communicatively coupled to the solar collector outlet and the jacket inlet, the return pipe having a predetermined inner diameter;

a containment tube which is open at both ends, having an inner diameter which is at least as great as the inner diameter of the return pipe, the containment tube extending from the top of the jacket toward the bottom and connected at its top to the jacket and around the jacket inlet, the containment tube having a vent positioned above the fluid in the jacket;

a dip tube which is closed at one end and open at the other end, the dip tube having an outer diameter which is smaller than the inner diameter of the jacket inlet, the open end of the dip tube being in communication with the jacket inlet so that the dip tube is contained within the containment tube, the dip tube having a vent opening positioned above the fluid in the jacket and a main opening positioned below the fluid in the jacket, the vent opening having a predetermined size sufficient to create a fluid back pressure in the return pipe which exceeds the vapor pressure of the fluid within the collector.

BUREAU OMPI WIPO INTERNATIONAL

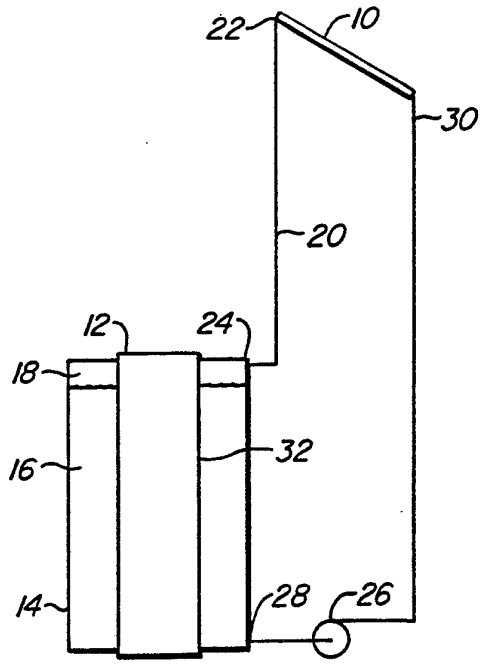

FIG._1.

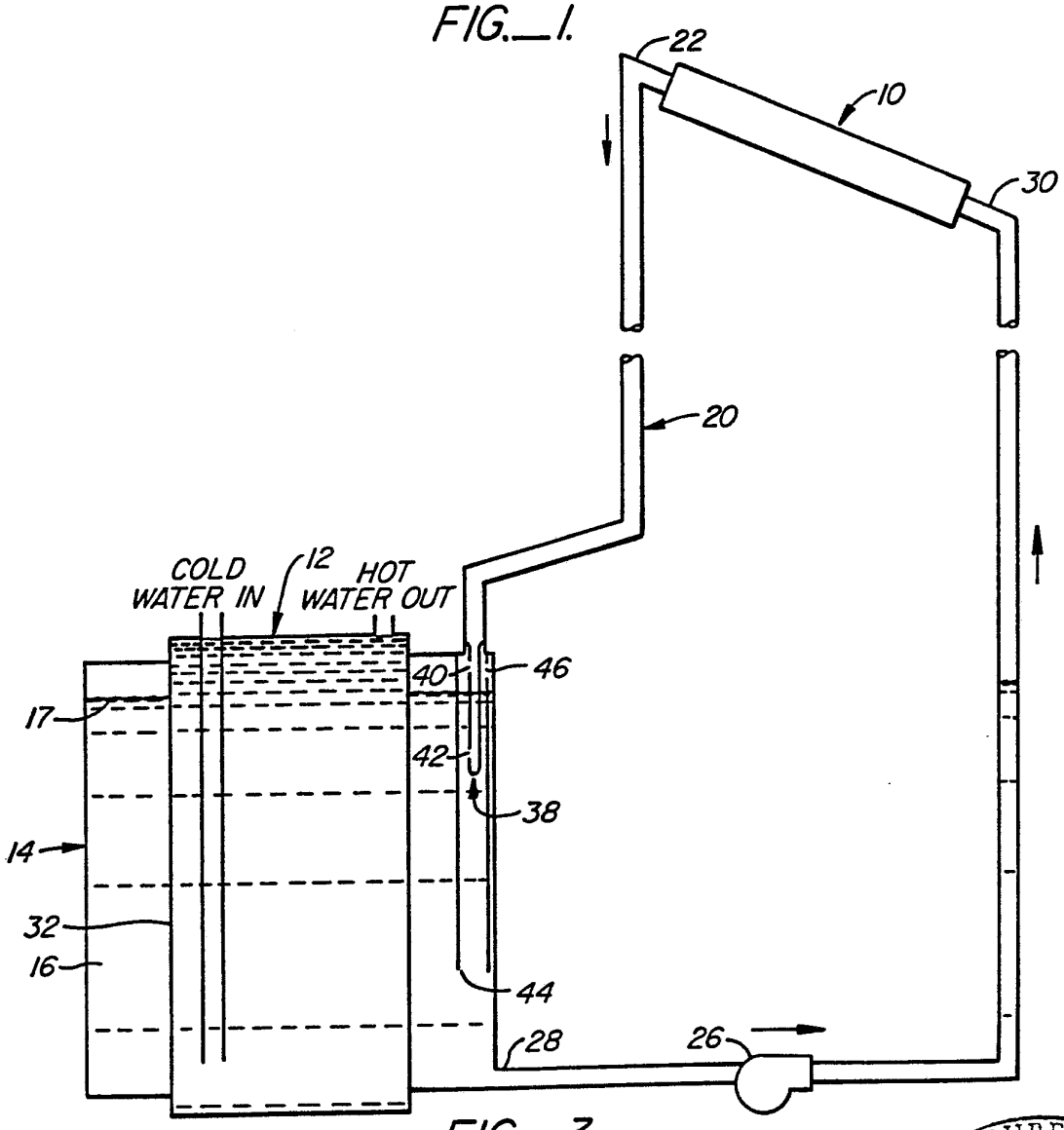

FIG._3.

SUBSTITUTE SHEET

BUREAU OMPI WIPO INTERNATIONAL

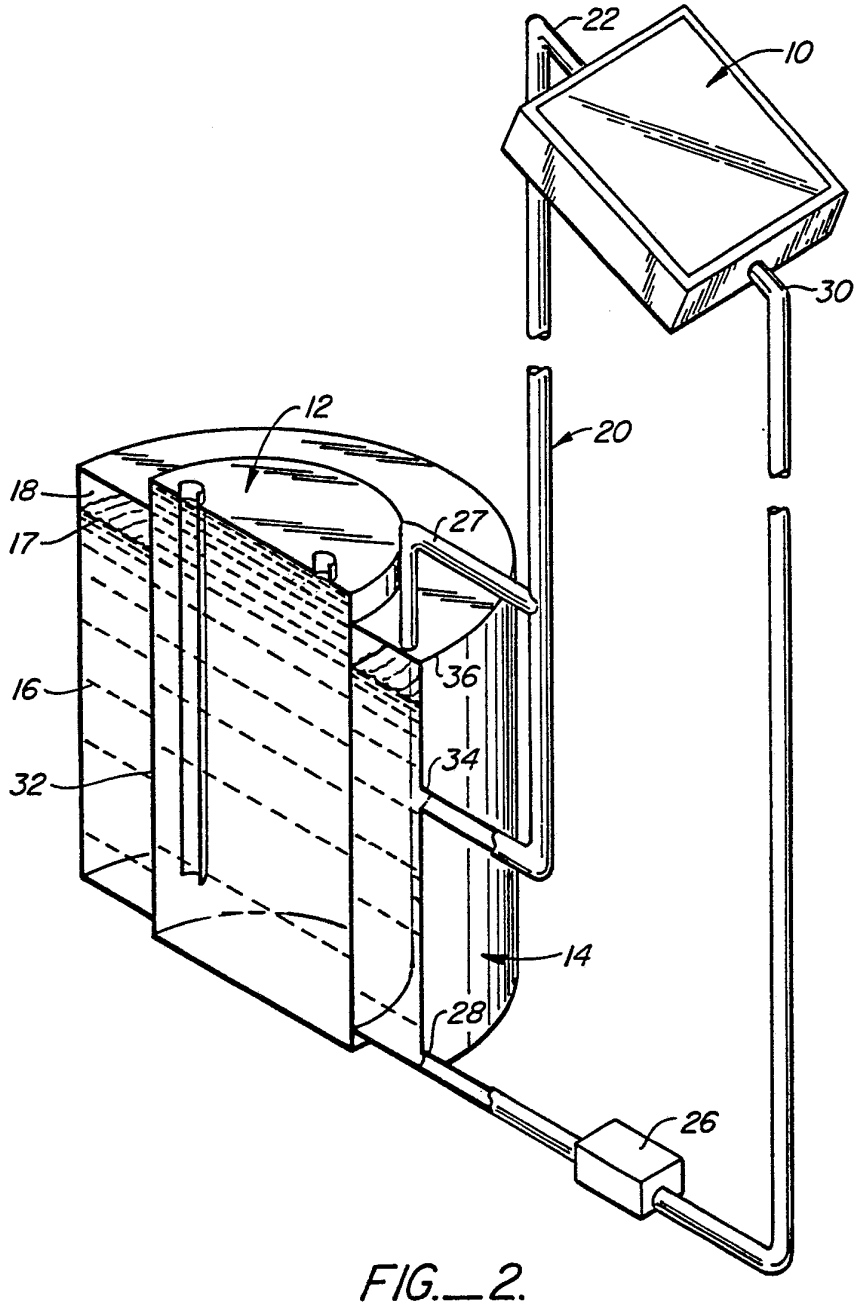

FIG. 2.

BUREAU OMPI WIPO INTERNATIONAL

INTERNATIONAL SEARCH REPORT

International Application No PCT/US 82/00444

I. CLASSIFICATION OF SUBJECT MATTER (if several classification symbols apply, indicate all) [3]

According to International Patent Classification (IPC) or to both National Classification and IPC

INT. CL.[3] F24J 3/02

U.S. CL. 126/420

II. FIELDS SEARCHED

Minimum Documentation Searched [4]

Classification System	Classification Symbols
U.S.	126/420, 421, 422, 419, 435, 437 137/59, 62 165/18, 160 237/66, 80 219/283, 297, 310, 322

Documentation Searched other than Minimum Documentation to the Extent that such Documents are Included in the Fields Searched [5]

III. DOCUMENTS CONSIDERED TO BE RELEVANT [14]

Category *	Citation of Document, [16] with indication, where appropriate, of the relevant passages [17]	Relevant to Claim No. [18]
X, E	US, A 4,326,499 Published 27 April 1982 Koskela	1-15
X, E	US, A, 4,324,228 Published 13 April 1982 Shippee	1-2, 4-9, 13
X, P	US, A, 4,269,167 Published 26 May 1981 Embree	1-7, 9-10, 12
A	GB, A, 2,054,130 Published 11 Feb. 1981 Beasley	1, 5-7
A	ITT Bulletin TESE-576, Copyright 1976 by ITT, "Solar Heating Systems Design Manual", pages 4-8 to 4-15.	1, 5-7, 9

* Special categories of cited documents: [15]

"A" document defining the general state of the art which is not considered to be of particular relevance

"E" earlier document but published on or after the international filing date

"L" document which may throw doubts on priority claim(s) or which is cited to establish the publication date of another citation or other special reason (as specified)

"O" document referring to an oral disclosure, use, exhibition or other means

"P" document published prior to the international filing date but later than the priority date claimed

"T" later document published after the international filing date or priority date and not in conflict with the application but cited to understand the principle or theory underlying the invention

"X" document of particular relevance; the claimed invention cannot be considered novel or cannot be considered to involve an inventive step

"Y" document of particular relevance; the claimed invention cannot be considered to involve an inventive step when the document is combined with one or more other such documents, such combination being obvious to a person skilled in the art.

"&" document member of the same patent family

IV. CERTIFICATION

Date of the Actual Completion of the International Search [2]	Date of Mailing of this International Search Report [2]
09 July 1982	22 JUL 1982
International Searching Authority [1]	Signature of Authorized Officer [20]
ISA/US	Randall L. Green RANDALL L. GREEN