(12) INTERNATIONAL APPLICATION PUBLISHED UNDER THE PATENT COOPERATION TREATY (PCT)

(19) World Intellectual Property Organization
International Bureau

(43) International Publication Date
27 November 2014 (27.11.2014)

WIPO | PCT

(10) International Publication Number
WO 2014/189383 A1

(51) International Patent Classification:
A01K 61/00 (2006.01)

(21) International Application Number:
PCT/NO2014/050079

(22) International Filing Date:
19 May 2014 (19.05.2014)

(25) Filing Language: Norwegian

(26) Publication Language: English

(30) Priority Data:
20130703 21 May 2013 (21.05.2013) NO

(71) Applicant: **AQUALINE AS** [NO/NO]; P.B. 2200 Sentrum, N-7412 Trondheim (NO).

(72) Inventor: **FURBERG, Geir**; Dyrvik, N-7270 Dyrvik (NO).

(74) Agent: **ACAPO AS**; P.O. Box 1880 Nordnes, N-5817 Bergen (NO).

(81) Designated States *(unless otherwise indicated, for every kind of national protection available)*: AE, AG, AL, AM, AO, AT, AU, AZ, BA, BB, BG, BH, BN, BR, BW, BY, BZ, CA, CH, CL, CN, CO, CR, CU, CZ, DE, DK, DM, DO, DZ, EC, EE, EG, ES, FI, GB, GD, GE, GH, GM, GT, HN, HR, HU, ID, IL, IN, IR, IS, JP, KE, KG, KN, KP, KR, KZ, LA, LC, LK, LR, LS, LT, LU, LY, MA, MD, ME, MG, MK, MN, MW, MX, MY, MZ, NA, NG, NI, NO, NZ, OM, PA, PE, PG, PH, PL, PT, QA, RO, RS, RU, RW, SA, SC, SD, SE, SG, SK, SL, SM, ST, SV, SY, TH, TJ, TM, TN, TR, TT, TZ, UA, UG, US, UZ, VC, VN, ZA, ZM, ZW.

(84) Designated States *(unless otherwise indicated, for every kind of regional protection available)*: ARIPO (BW, GH, GM, KE, LR, LS, MW, MZ, NA, RW, SD, SL, SZ, TZ, UG, ZM, ZW), Eurasian (AM, AZ, BY, KG, KZ, RU, TJ, TM), European (AL, AT, BE, BG, CH, CY, CZ, DE, DK, EE, ES, FI, FR, GB, GR, HR, HU, IE, IS, IT, LT, LU, LV, MC, MK, MT, NL, NO, PL, PT, RO, RS, SE, SI, SK, SM, TR), OAPI (BF, BJ, CF, CG, CI, CM, GA, GN, GQ, GW, KM, ML, MR, NE, SN, TD, TG).

Published:

— *with international search report (Art. 21(3))*

(54) Title: SYSTEM AND FISH CAGE FOR FISH FARMING

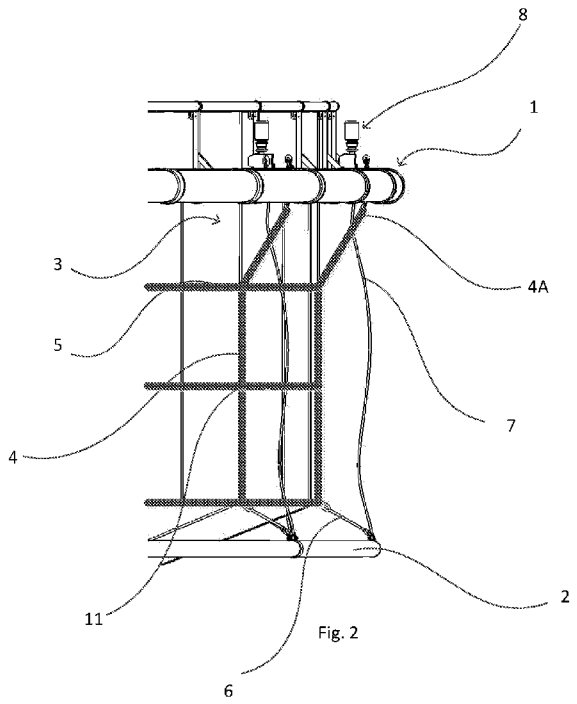

Fig. 2

(57) Abstract: Fish cage comprising floating collar (1), net cage and sinker tube (2), wherein a number of strengthening elements (4, 5) are connected to the fish cage, and wherein the sinker tube (2) is connected to the strengthening elements. The strengthening elements comprise vertical strengthening elements (4, 4A) running downwards from the floating collar to the sinker tube, and horizontal strengthening elements (5) running along the circumference of the net cage. The strengthening elements (4, 5) are connected to each other in cross points (11), and the sinker tube (2) is connected to the strengthening elements (4, 5) in such a way that the strengthening elements (4, 5) carry the weight of the sinker tube (2). The fish cage comprises further a number of lines (7) distributed along the circumference, as the lines run from the floating collar (1) to the sinker tube (2), without carrying the weight of the sinker tube when the sinker tube is in its lower position. System for lifting sinker tube of such a fish cage, which comprises a number of lines (7) distributed along the circumference of the net cage, as the lines runs from the floating collar (1) to the sinker tube (2), and at the least one device (8) for tightening and pulling the lines, as an upper end of each line is connected to the device (8) and a lower part is connected to the sinker tube (2).

WO 2014/189383 A1

SYSTEM AND FISH CAGE FOR FISH FARMING

The present invention is related to a new fish cage, and a new system for lifting the sinker tube, according to the preamble of the independent patent claims.

Background

There is a problem regarding fish farming that fish escapes from the plant, often due to holes in the wall of the net cage. The holes may arise due to wear and tear, defects or extreme weather. This is a disadvantage because farmed fish is getting mixed with wild fish, but it is also a large economical loss to the fish farming industry.

A traditional fish cage for farming salmon and trout comprises among others a floating collar being on the surface of the ocean, a net cage stretching downwards from the floating collar, and a sinker tube holding the net cage dilated at the lower end. The sinker tube is fastened to the net cage in the transition between net wall and net bottom, but the weight of the sinker tube is normally carried of a number of chains running between the sinker tube and the floating collar. The sinker tube chain is running on the outside of the net cage, and when there is strong ocean current or wind, the net cage may be displaced towards the chain in such a way that the chain touches and tears the net cage. Over time, the chain may wear the net, and a hole may arise.

By "floating collar" it is in this patent application meant devices at the surface of the sea holding the fish cage floating. This is traditionally two pipes running in circle, wherein the pipes are side by side, and fasten to each other by brackets. On the brackets there are often vertical bars making attachment for a handrail at the upper end. The net cage is fastened to the inner side of the circles, and the floating collar holds the net cage floating.

By "net cage" it is in this patent application meant the net holding the fish inside the fish cage. The net cage is performed as a bag having walls and bottom, and has preferably shape as a circular cylinder with conical bottom. The upper part of the net cage is fastened to the floating collar, while the lower part, preferably lower part of the wall or the transition between wall and bottom, is fastened to a sinker tube. The material of the net cage and the net cage in total is chosen according to traditional criteria, with a convenient mesh width.

By "sinker tube" it is in this patent application meant a device being lowered into the sea, and holding the net cage dilated. The sinker tube has preferably about the same shape and diameter as one of the rings of the floating collar, and it is heavy so that the fish cage is held down and does not float up. The lower part of the net cage is fastened to the sinker tube, and the sinker tube will thus also make sure that the lower part of the net cage is dilated.

In different situations, one may need to lift the net cage, and this is performed by lifting the sinker tube. Lifting may for instance be necessary upon emptying or treatment of disease of the fish in the fish cage, but also upon cleaning and replacement of the net cage. The net cage is lifted by pulling the sinker tube chain, and by pulling the net and collecting it at the inside of the fish cage. The sinker tube chains are distributed along the floating collar and must be pulled at the same time, or stage by stage on turn to avoid risks for stretch and tear of the net. The same is related to lifting and collecting of the net cage. This is time consuming and labor intensive, and the work may also be heavy and dangerous.

Many different types of fish cages are known, for instance from the patentee, CN 2733895 and NO 329812, and from WO 01/65925, SU 641943 and CN 101878742 different systems for lifting/lowering the net cages are known. However, none of these fish cages solve the problems related to the sinker tube and wear and tear of the net related to that.

Object

There is an object of the present invention to provide a fish cage whereby wear of the net is reduced. Further, it is an object of the present invention to provide a system for lifting the net, as the system should be time- and labor saving, and also less risky. Finally it is an object to provide a fish cage and a system being designed for all kinds of weather and ocean currents.

The invention

The objects are met by a fish cage and a system according to the characterizing part of the independent patent claims.

A fish cage according to the present invention comprises a floating collar, a net cage and a sinker tube, wherein strengthening elements are connected to the net cage, and wherein the sinker tube is connected to the strengthening elements. The

strengthening elements are running vertically downwards from the floating collar towards the sinker tube, and horizontally along the circumference of the net cage. The elements are connected to each other at cross points.

A system for lifting the sinker tube of a fish cage according to the present invention, comprises a number of lines running from the floating collar to the sinker tube, and at the least one device for tightening and pulling the lines. The lines are evenly distributed along the circumference of the fish cage, and an upper end of the lines is fastened to the device(s), and a lower end is fastened to the sinker tube. In a preferred embodiment, the device(s) for tightening and pulling the lines, is a winch, and in a more preferred embodiment, it is used one winch per line.

A fish cage according to the present invention has strengthening elements at or in the net cage. The strengthening elements are running both downwards from the floating collar to the sinker tube (vertical elements), and around the circumference of the net cage (horizontal elements). The strengthening elements are fastened to each other in cross points, so that a grid of elements is made. These elements will distribute the forces around the whole fish cage in such a way that stretches to the net are better distributed, and the danger for tear is less.

The upper ends of the vertical strengthening elements are preferably fastened to the floating collar, while the lower ends are connected to the sinker tube. The fastening between the strengthening elements and the floating collar and the sinker tube, respectively, may be performed in many ways which will be obvious to a person skilled of the art. Thus, the fastening is not described any further here.

In a preferred embodiment of the present invention, the horizontal strengthening elements are fastened directly to the net, preferably along the whole circumference of the net. The vertical strengthening elements are preferably also fastened to the net cage along their entire length, except in the upper part. In cases where the strengthening elements are longer than the fish cage, for fastening to the sinker tube, the exception is also valid for the lower part. In alternative embodiments, the strengthening elements are only fastened point by point.

An upper part of the vertical strengthening elements are preferably not fastened to the net cage, as the upper end of the elements are fastened to the floating collar at a distance from the inner circumference where the net cage is fastened, in such a way

that the upper part of the elements are forming an inclined angle towards the net cage. In this way the forces are better distributed in the floating collar, and a stretch in the upper part of the net cage is achieved, in such a way that it is kept dilated.

In an alternative embodiment is a net fastened to the upper part of the strengthening elements in such a way that a net cage is provided on the outside of the actual net cage of the fish cage. This net will function as a predator net, as predators will not get till the actual net cage.

The strengthening elements are preformed to carry the weight of the sinker tube, and are preferably made of fiber rope being sewn to the net cage. The sinker tube is either fastened directly to a lower part of the vertical elements or via other means. The sinker tube maintains stretch of the net, and lower part of the net dilated. The vertical elements will be held tight by the weight of the sinker tube, and since the vertical and horizontal strengthening elements are connected to each other in cross points, the horizontal elements will be pulled outwards, and the fish cage will thus be held dilated over the whole depth of the net, and during most conditions and sea currents. The dilation will ensure good opening of the meshes in all parts of the net cage, which will ensure good through-put of water, and thus sufficient supply of oxygen.

In a preferred embodiment of the present invention, the sinker tube is connected to the strengthening elements in such a way that the sinker tube is lying below and outside of the transition between wall and bottom of the net cage. In this way it is achieved a favorable distribution of forces which will prevent the meshes of the net to be drawn askew.

When the sinker tube is fastened to or at the strengthening elements, the need for a tight chain or line carrying the weight of the sinker tube is gone, and one avoids that such a line will be touching the net and may cause wear with the danger of a hole in the net.

According to the present invention it is performed a system for lifting the sinker tube, wherein the sinker tube is a part of a fish cage according to the present invention, as described above. The system comprises a number of lines running from the floating collar to the sinker tube, as the lines do not carry the weight of the sinker tube, but are lying loose in the water when the sinker tube is at its lower position. Since the

lines are loose they will not harm the net. The upper end of each line is preferably connected to one or more devices for tightening and pulling the lines, for instance a winch. The winch(es) is preferably located on the walkway. In cases where it is used more than one device, the devices should be synchronized in such a way that pulling of the lines, which will result in lifting of the sinker tube, may be done at the same time and at the same speed, in such a way that the tube is lifted evenly around the fish cage and that stretch in the net cage is avoided.

By «line» it is in this patent application meant any convenient rope, chain, wire, strap or the similar. When the sinker tube is at its lower position, the weight of the sinker tube is carried of the strengthening elements of the fish cage, and the lines are loose. When the sinker tube is lifted or in a lifted position, the lines are carrying the weight of the sinker tube. The lines must thus be performed in such a way that they both can carry the weight of the sinker tube, and run loose at the outside of the net without harming the net. This will be obvious to a person skilled of the art.

The winch or device to pull the lines comprises a reel wherein the line is coiled and stored when it is pulled out of the water. In a preferred embodiment of the present invention, the line is led through an aperture in the walkway and onto the reel. The aperture is preferably parallel with the length of the reel, and has preferably the same length as the reel. Further, the aperture must be sufficiently large so that the line may travel naturally along the reel and coil evenly on the reel.

Further, the line may be fouled after being in the sea for a period. To scrape this off the line, the line is preferably led through a convenient device before the line is coiled on the reel.

The invention will in the following be described with an example given to illustrate the invention, and should not be used to interpret the invention, as it is defined in the enclosed claims, restrictive.

Example

A preferred embodiment of the invention will in the following, be described with reference to the enclosed Figures, where

Figure 1 shows a fish cage and a system according to the present invention, seen in perspective,

Figure 2 shows an enlarged section of a part of the fish cage in Figure 1, and

Figure 3 shows an enlarged section of a part of the floating collar of the fish cage shown in Figures 1 and 2.

The fish cage shown in Figures 1, 2 and 3 is in accordance to the present invention, and comprises a floating collar 1, a sinker tube 2 and a net cage 3. A number of strengthening elements are fastened to net cage, vertical strengthening elements 4 and horizontal elements 5, running along the actual net cage. In the shown embodiment, the fish cage is provided with 4 horizontal strengthening element; one at the transition between net wall and net bottom in the net cage, one at the fastening to the floating collar, and two intervening elements. The embodiment is further shown with vertical strengthening elements at every third bracket of the floating collar. This may, of course, vary. The strengthening elements 4, 5 are sewn to the net cage, and to each other in cross points 11, in such a way that a grid of strengthening elements are made. The net is not shown in the Figures.

In the shown embodiment, the vertical strengthening elements 4 run along the net wall and in the transition between net wall and net bottom, the sinker tube 2 is fastened to cross point 11 between vertical and horizontal strengthening elements via connection means 6. The sinker tube is fastened in such a way that it is below the wall of the fish cage, and has a size corresponding to the floating collar so that the lower part of the fish cage is held dilated.

In the shown embodiment, an upper part 4A of each vertical strengthening element 4, from the second uppermost horizontal strengthening element 5, is not connected to the fish cage, but stretches in an angle from this towards the floating collar, preferably towards centre of the floating collar. In this way a better distribution of the forces affecting the floating collar, is achieved, and the horizontal strengthening element wherefrom the vertical elements are no longer fastened to the net cage, will be stretched outwards in such a way that the fish cage is held dilated.

Between the floating collar 1 and the sinker tube 2, there are a number of lines 7 for lifting the sinker tube, in the shown embodiment there is a line at every third bracket of the floating collar. It is no tension on these lines 7 when the sinker tube is at its lowest position, then they are hanging loose at the side of the net cage as shown in Figure 1 and 2. A corresponding number of winches 8 are placed on the floating collar, and an upper end of the lines 7 is fastened to these.

Upon a need for lifting the net cage, the winches are activated in such a way that the lines are coiled onto a reel (not shown). The winches are connected and synchronized in such a way that they are activated at the same time, and coils equal amount of line at the same time. The lines are led through an aperture 9 in a walkway 10 on the floating collar, where the aperture is performed in such a way that it gives a convenient movement on the line in such a way that it is coiled evenly on the reel as the sinker tube 2 is lifted. The net cage will come upwards together with the sinker tube, and may be collected stage by stage in regular way.

When the sinker tube 2 is raised to desired height, the winches 8 are stopped, and the sinker tube will hang in the lines 7. Once the work is performed, the sinker tube is lifted further, eventually lowered again, by activating the winches accordingly. When sinker tube 2 has reached its lower position, and is hanging in the net cage, the winches coils out lines 7 in such a way that they carry no weight.

Patent claims

1. Fish cage comprising floating collar (1), net cage and sinker tube (2), wherein a number of strengthening elements (4, 5) are connected to the net cage, and wherein the sinker tube (2) is connected to the strengthening elements, **characterized** in that

- the strengthening elements comprises vertical strengthening elements (4, 4A) running downwards from the floating collar to the sinker tube, and horizontal strengthening elements (5) running along the circumference of the net cage, as the elements (4, 5) are connected to each other at cross points (11),
- the sinker tube (2) is connected to the strengthening elements (4, 5) in such a way that the strengthening elements (4, 5) carry the weight of the sinker tube (2), and
- the fish cage comprises a number of lines (7) distributed along the circumference, wherein the lines runs from the floating collar (1) to the sinker tube (2), without carrying the weight of the sinker tube when the sinker tube is in its lower position.

2. Fish cage according to claim 1, **characterized** in that the horizontal strengthening elements (5) run along the whole circumference of the net cage, and is connected to it.

3. Fish cage according to claims 1 or 2, **characterized** in that a horizontal strengthening element is placed along the circumference of the net cage, in the transition between net wall and net bottom.

4. Fish cage according to any one of the claims 1-3, **characterized** in that a horizontal strengthening element is placed along the circumference of the net cage, at the fastening to the floating collar.

5. Fish cage according to any one of the preceding claims, **characterized** in that an upper part (4A) of the vertical strengthening elements (4) is not connected to the net cage.

6. Fish cage according to claim 5, **characterized** in that an upper part (4A) of the vertical strengthening elements (4) is stretching inclined outwards from the net cage, from a cross point (11) with a horizontal strengthening element (5), and upwards to the floating collar (1).

7. Fish cage according to any one of the preceding claims, **characterized** in that the sinker tube (2) is connected to the strengthening elements (4, 5) by connection means (6).

8. System for lifting a sinker tube of a fish cage according to claim 1, **characterized** by comprising at the least one device (8) for tightening and pulling the lines (7) running from the floating collar (1) to the sinker tube (2), wherein an upper end of the lines is fastened to the device (8) and a lower end is fastened to the sinker tube (2).

9. System according to claim 8, **characterized** in that the lines (7) are carrying the weight of the sinker tube (2) when the sinker tube is lifted or is in a lifted position.

10. System according to claims 8 or 9, **characterized** in that the lines (7) are loose when the sinker tube (2) is in the lower position.

11. System according to claim 8, **characterized** in that the device (8) for tightening and pulling the lines is a winch (8) with a reel.

12. System according to claim 11, **characterized** by comprising the same number of winches (8) as lines (7).

13. System according to claim 12, **characterized** in that the winches (8) are synchronized in such a way that they coil the same amount of line (7) per time, in such a way that the sinker tube (2) is lifted evenly around the fish cage.

14. System according to any one of the claims 8-13, **characterized** in that the devices are arranged on a walkway (10) on the floating collar.

15. System according to claim 14, **characterized** in that each line (7) is led through an aperture (9) in the walkway, as the aperture is performed in such a way that the line is coiled evenly on a reel of the winch.

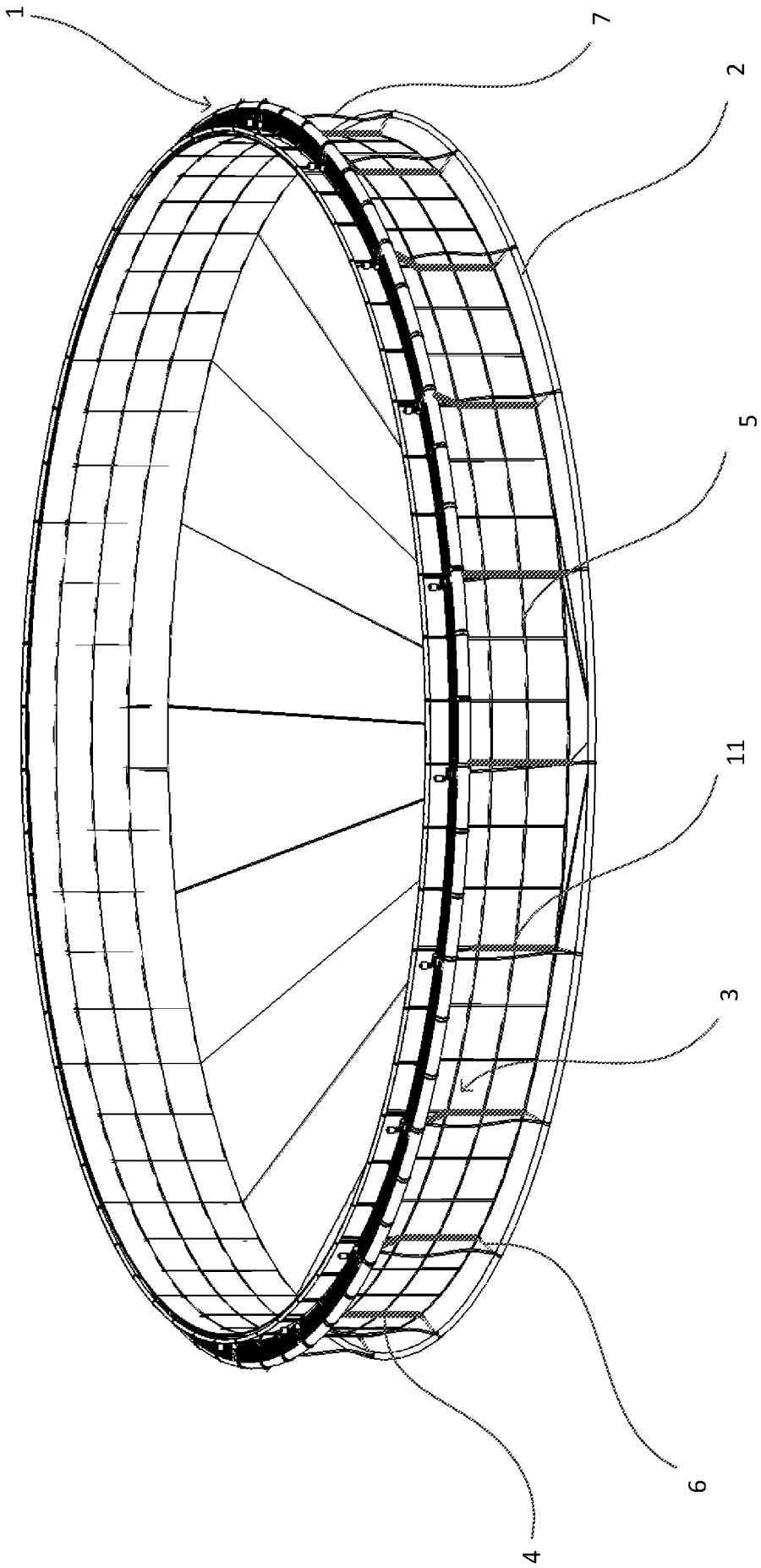

Fig. 1

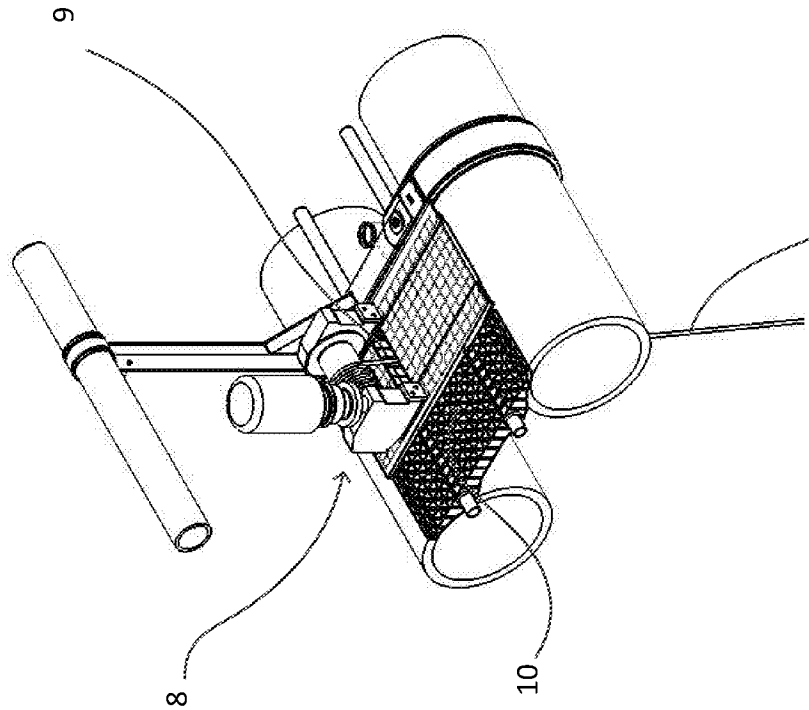

Fig. 3

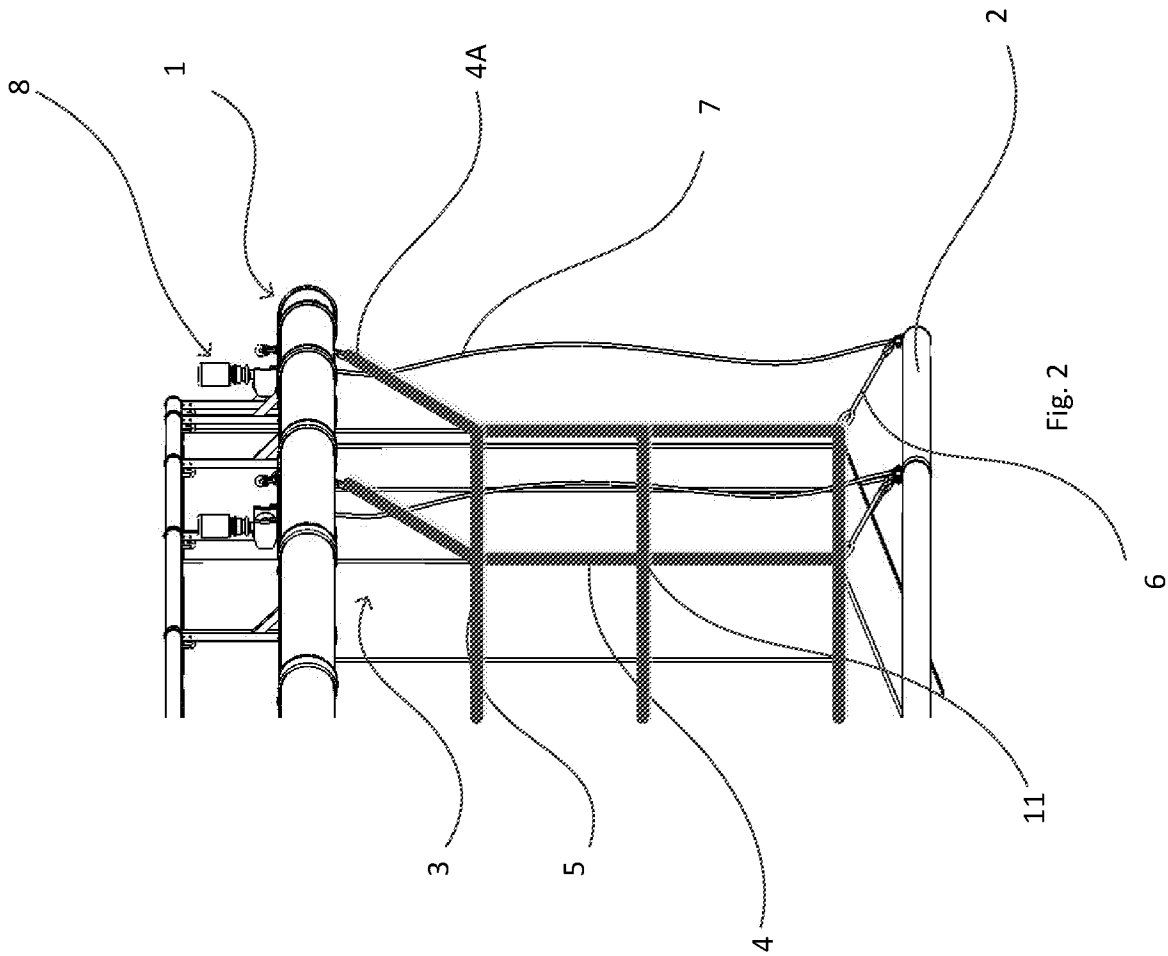

Fig. 2

INTERNATIONAL SEARCH REPORT

International application No.
PCT/NO2014/050079

A. CLASSIFICATION OF SUBJECT MATTER

IPC: see extra sheet

According to International Patent Classification (IPC) or to both national classification and IPC

B. FIELDS SEARCHED

Minimum documentation searched (classification system followed by classification symbols)

IPC: A01K

Documentation searched other than minimum documentation to the extent that such documents are included in the fields searched

SE, DK, FI, NO classes as above

Electronic data base consulted during the international search (name of data base and, where practicable, search terms used)

EPO-Internal, PAJ, WPI data

C. DOCUMENTS CONSIDERED TO BE RELEVANT

Category*	Citation of document, with indication, where appropriate, of the relevant passages	Relevant to claim No.
Y	SU 641943 A (AZOVSK NII RYBNOGO KHOZ), 15 January 1979 (1979-01-15); (abstract) Retrieved from: WPI database; Original document: figures --	1-4, 7-15
Y	WO 2010087713 A1 (AKVA GROUP ASA ET AL), 5 August 2010 (2010-08-05); abstract; page 5, line 9 - line 23; figures 2-6 --	1-4, 7-15
Y	CN 2733895 Y (JIANG DAPENG), 19 October 2005 (2005-10-19); (abstract) Retrieved from: EPODOC database; Original document: figures 1,2 --	1-4, 7-15

☒ Further documents are listed in the continuation of Box C. ☒ See patent family annex.

* Special categories of cited documents:

"A" document defining the general state of the art which is not considered to be of particular relevance

"E" earlier application or patent but published on or after the international filing date

"L" document which may throw doubts on priority claim(s) or which is cited to establish the publication date of another citation or other special reason (as specified)

"O" document referring to an oral disclosure, use, exhibition or other means

"P" document published prior to the international filing date but later than the priority date claimed

"T" later document published after the international filing date or priority date and not in conflict with the application but cited to understand the principle or theory underlying the invention

"X" document of particular relevance; the claimed invention cannot be considered novel or cannot be considered to involve an inventive step when the document is taken alone

"Y" document of particular relevance; the claimed invention cannot be considered to involve an inventive step when the document is combined with one or more other such documents, such combination being obvious to a person skilled in the art

"&" document member of the same patent family

Date of the actual completion of the international search	Date of mailing of the international search report
01-08-2014	01-08-2014

Name and mailing address of the ISA/SE	Authorized officer
Patent- och registreringsverket Box 5055 S-102 42 STOCKHOLM Facsimile No. + 46 8 666 02 86	Erik Dahlblom Telephone No. + 46 8 782 25 00

INTERNATIONAL SEARCH REPORT

International application No.
PCT/NO2014/050079

C (Continuation). DOCUMENTS CONSIDERED TO BE RELEVANT

Category*	Citation of document, with indication, where appropriate, of the relevant passages	Relevant to claim No.
A	CN 101878742 A (CN ACAD FISHERY SCIENCES CAFS), 10 November 2010 (2010-11-10); (abstract) Retrieved from: WPI database. --	8-15
A	US 5549076 A (KAARSTAD CHARLES), 27 August 1996 (1996-08-27); abstract; column 3, line 24 - line 33; figures 1,2A --	8-15
A	Aqualine FroeyaRing Bunnring [online] Aqualine [retrieved on 2014-07-31]Retrieved from the Internet: <URL: http://www.aqualine.no/produkter/aqualine-froeyaring-bunnring/> -- --------	1-15

International application No.
PCT/NO2014/050079

Continuation of: second sheet

International Patent Classification (IPC)

A01K 61/00 (2006.01)

SU	641943	A	15/01/1979	NONE			
WO	2010087713	A1	05/08/2010	NO	20090485	A	02/08/2010
				NO	329812	B1	20/12/2010
CN	2733895	Y	19/10/2005	NONE			
CN	101878742	A	10/11/2010	NONE			
US	5549076	A	27/08/1996	BR	9206604	A	07/11/1995
				CA	2120777	A1	15/04/1993
				CA	2120749	A1	15/04/1993
				EP	0612210	B1	14/05/1997
				JP	H07500011	A	05/01/1995
				NO	173681	B	11/10/1993
				NO	913933	A	13/04/1993
				WO	9306720	A1	15/04/1993