J. HASSELBERGER.

PAINTING MACHINE.

APPLICATION FILED NOV. 21, 1916.

1,426,986.

Patented Aug. 22, 1922.

3 SHEETS—SHEET 1.

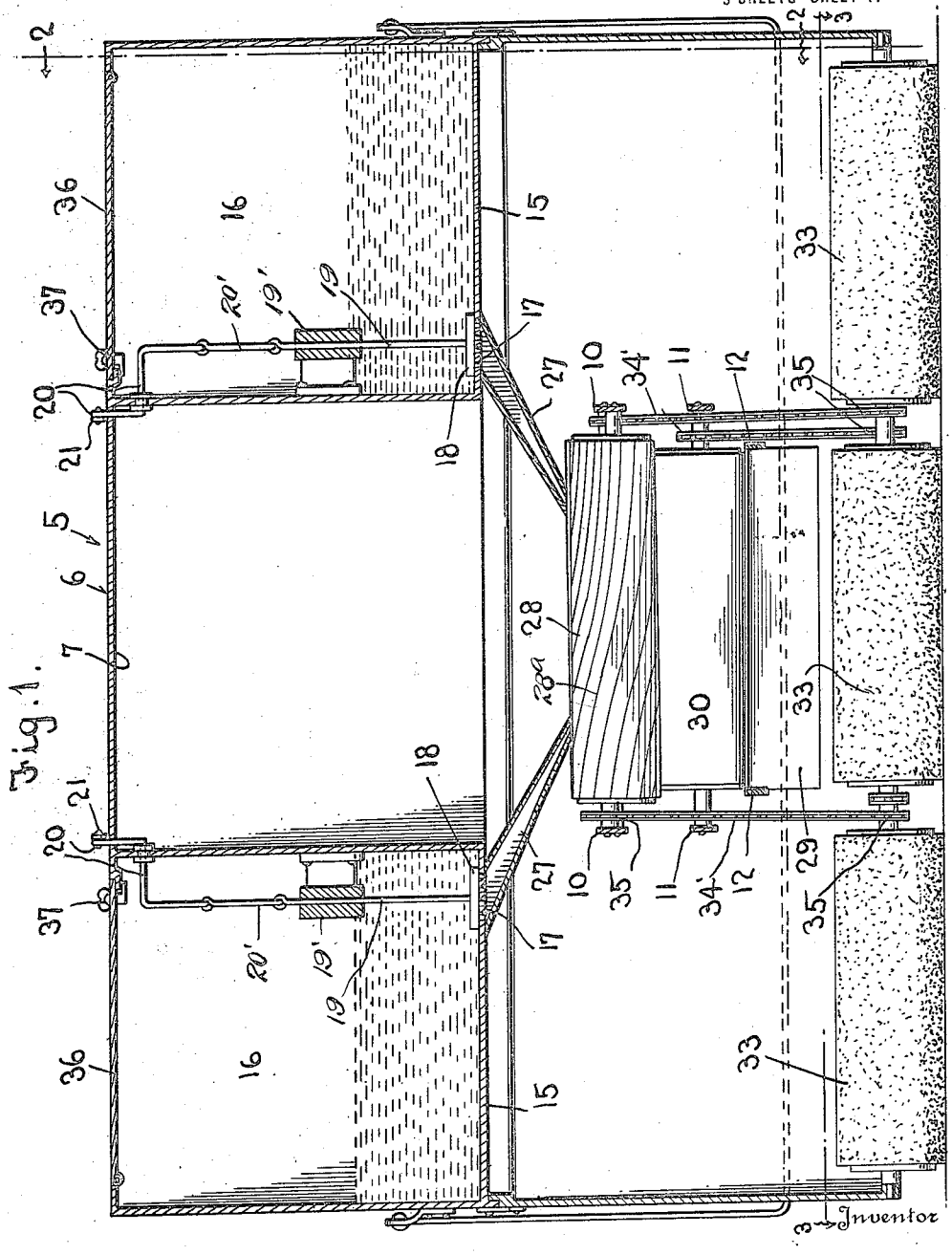

Fig. 1.

Witness
L. B. James

John Hasselberger
By Chas. P. Richardson
Attorney

J. HASSELBERGER.

PAINTING MACHINE.

APPLICATION FILED NOV. 21, 1916.

1,426,986.

Patented Aug. 22, 1922.

3 SHEETS—SHEET 2.

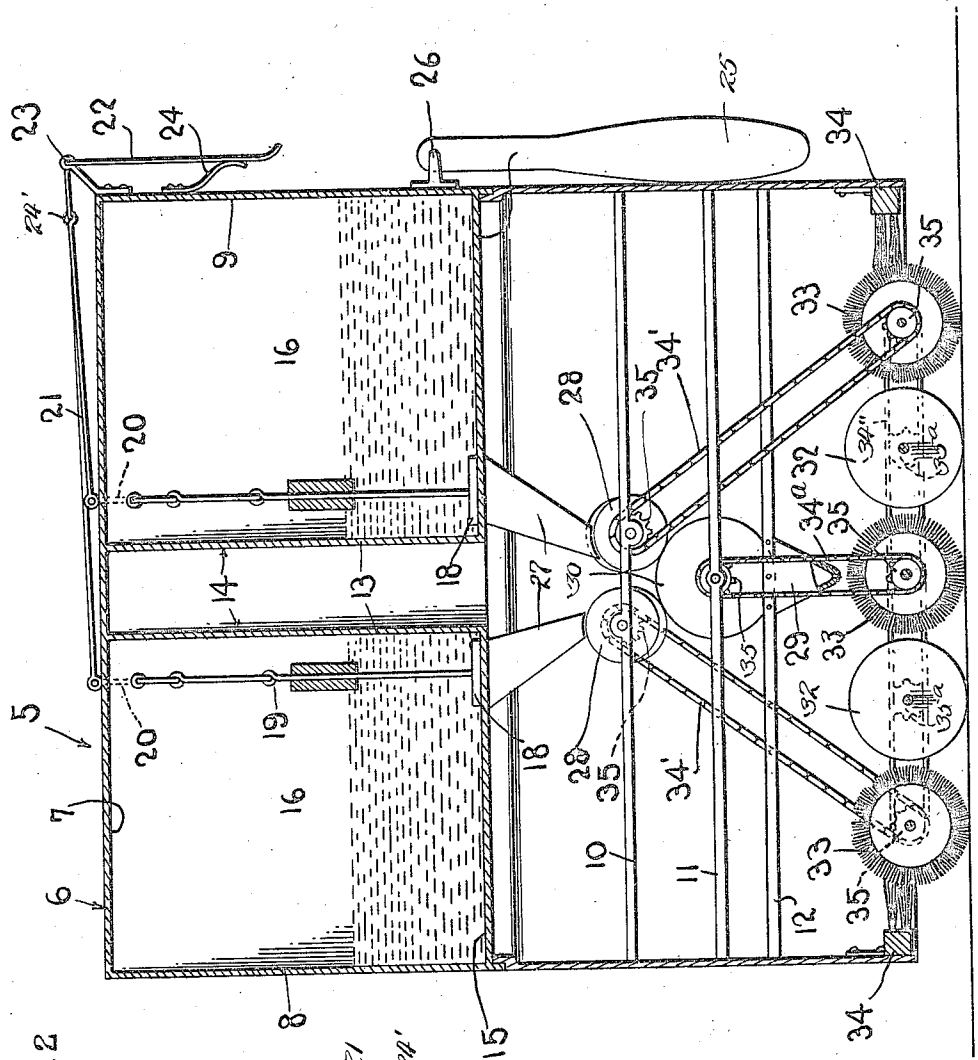

Fig. 2

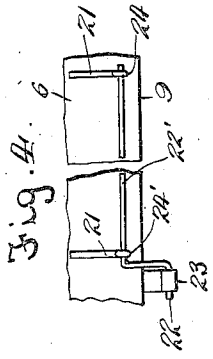

Fig. 4.

Witness

L. B. James

Inventor

John Hasselberger

By Chas. C. Richardson

Attorney

J. HASSELBERGER.

PAINTING MACHINE.

APPLICATION FILED NOV. 21, 1916.

1,426,986. Patented Aug. 22, 1922.

3 SHEETS—SHEET 3.

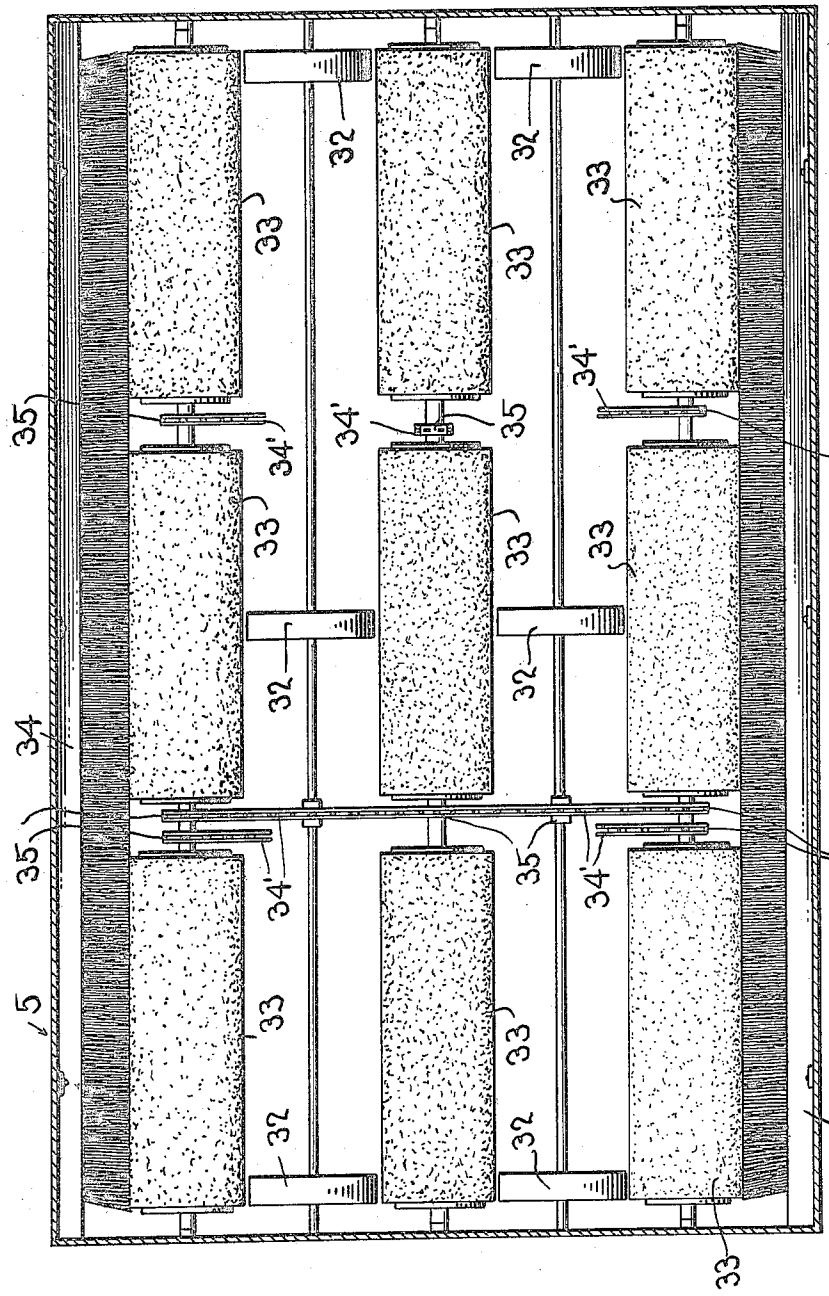

Fig. 3.

Witness
L. B. James

Inventor
John Hasselberger
By Chas. C. Richardson
Attorney

UNITED STATES PATENT OFFICE.

JOHN HASSELBERGER, OF EAST HAMPTON, NEW YORK.

PAINTING MACHINE.

1,426,986. Specification of Letters Patent. Patented Aug. 22, 1922.

Application filed November 21, 1916. Serial No. 132,553.

(GRANTED UNDER THE PROVISIONS OF THE ACT OF MARCH 3, 1921, 41 STAT. L., 1313.)

To all whom it may concern:

Be it known that I, JOHN HASSELBERGER, a citizen of the United States, residing at East Hampton, in the county of Suffolk and State of New York, have invented certain new and useful Improvements in Painting Machines, of which the following is a specification.

This invention relates to painting machines.

An important object of the invention is to provide in a machine of the above mentioned character a means whereby the paint may be evenly applied to the surface of the object upon which the device as a whole is designed to be operated.

A further object of the invention is to provide in a device of the above mentioned character a means whereby the greatest area of surface may be coated with the least possible amount of paint but at the same time supplying a sufficient thickness of paint to materially preserve the object designed to be coated with the paint.

A further object of the invention is to provide a device of the above mentioned character which is simple in construction, inexpensive to manufacture, strong, durable, and reliable in operation.

Other objects and advantages of the invention will be apparent from the following description.

In the accompanying drawings forming a part of this specification and in which like numerals are employed to designate like parts throughout the same,

Figure 1 is a longitudinal vertical sectional view taken through the machine embodying my invention,

Figure 2 is a transverse vertical sectional view of the same taken on line 2—2 of Fig. 1, and

Figure 3 is a horizontal sectional view taken on the line 3—3 of Figure 1.

Fig. 4 is a detail of the rocking means for the crank shaft.

In the drawings wherein for the purpose of illustration is shown a preferred form of my invention the numeral 5 indicates a receptacle provided with a top 7, a bottom 15 and ends 8 and 9. The receptacle 5 is divided into compartments 16—16 by means of vertically disposed walls 13. The compartments 16 are adapted to receive therein a quantity of paint as indicated in Figures 1 and 2. The bottom 15 of the receptacle is provided within each of the compartments 16 with a plurality of openings indicated by the numerals 17. These openings are adapted to be opened and closed by means of valves 18 carried by vertically disposed rods 19 movable in guides 19′ carried by the side walls of the compartment 16. Journaled in the side walls of these compartments adjacent their upper ends are crank shafts 20 which are operatively connected with the rods 19 by links 20′. Connected with the upper ends of the crank shafts 20 are forwardly extending operating rods 21. In order to actuate the rods 21 there is provided a finger engaging member 22 having its upper end pivotally supported in a bearing 23 and its lower end engaged by and urged outwardly by a leaf spring 24 attached to the wall 9. This member 22 is formed with a horizontally disposed L-shaped extension 22′ which is pivotally connected with the rods 21 as at 24′.

From the disclosure thus far given it follows that upon pressing the member 22 inwardly toward the wall 9 the L-shaped extension 22′ moving upwardly in an arc of a circle will move the rods 21 longitudinally to rock the crank shafts 20 which in turn lift the valves 18 from the openings 17 to permit paint from the compartments 16 to discharge through the openings 17. Within the lower portion of the frame 6 which supports the receptacle 5 there is provided a plurality of horizontally disposed bearing supports 10, 11 and 12. Between the bearing supports 11 there is journaled a pair of paint receiving rolls indicated by the numerals 28 which are adapted to be fed with paint carried within the receptacle 5 by means of angular disposed troughs or conduits indicated by the numerals 27 underlying the opening 17 and overlying the rolls 28. These rolls are adapted to be driven by means of sprocket chains 34′ having engagement with the sprockets 35 carrying horizontally disposed shafts journaled within the lower portion of the frame 6 as shown in Figure 3. These shafts are provided with a plurality of rotating brushes 33, the face of the endmost brushes being adapted to contact with horizontally disposed wipers or brushes 34 secured to the frame 6 and extending longitudinally throughout the length of the same as clearly shown in Fig-

ure 3. These brushes are adapted to be driven or rotated by means of sprocket chains 34'' having engagement with the sprockets 35ª carried by each of the horizontally disposed shafts provided with brushes hereinbefore mentioned and also having engagement with sprockets 35ª carried by horizontally disposed rotating shafts journaled within the frame 6 substantially intermediate the brushes 33, the last named shafts being provided with a plurality of driving wheels 32 adapted to travel over the surface of the object to which the paint is desired to be applied. As illustrated in Figs. 2 and 3 one set of brushes 33 is in vertical alinement with the paint receiving rolls 28 and the intermediate brush of this set is directly below these rolls 28 and serve as a paint applying brush.

Journaled in the bearing supports 11 and disposed between the rolls 28 and the paint applying brush is a relatively large paint receiving roll 30 to which the paint from the rolls 28 is supplied. Underlying the roll 30 and supported by the members 12 is a V-shaped funnel 29 which extends the entire length of the roll 30 and has its outlet disposed over the vertical center of the paint applying brush. The roll 30 is driven by means of a sprocket chain 34ª operatively connected with the paint applying brush. A lid 36 provided with a suitable locking key 37 is hingedly connected to the receptacle 5 and serves as a means to permit paint to be poured into the receptacle. This lid 36 together with the locking means is clearly shown in Figure 1. A handle 25 is carried by the forward end of the casing 5 whereby the machine is moved back and forth over the surface to be painted or coated.

As shown in Figs. 1 and 2 the rolls 28 are slightly inclined in opposite directions and are formed with spiral longitudinally extending grooves or channels 28ª. In this connection it will be stated that the rolls 28 are inclined just enough to allow the paint to run through the grooves 28ª and thereby supply paint to the entire surface of the roll 30. Due to this slight inclination of the rolls 28 and the rotation of the same the centrifugal force will prevent any of the paint from being discharged from the ends of these rolls.

In the operation of my machine the same is pulled back and forth over the surface to be painted or coated by means of the handle 25 and the paint being supplied to the intermediate or paint applying brush 33 will be eventually applied to the surface. The continued back and forth movement of the machine will cause the end brushes 33 to spread and evenly rub the paint into the surface. The sets of brushes 33 disposed upon opposite sides of the intermediate set of brushes 33 serve as spreader or rubbing in brushes. That is, the machine while applying paint to one area will be rubbing in the paint on areas previously painted. Should too much paint adhere to the brushes 33 it will be wiped therefrom by the wipers or brushes 34.

Having thus fully described the invention what is claimed is:

1. A painting machine including a wheel supported casing, a plurality of painting receiving compartments carried thereby and having paint discharge openings therein, valves controlling the openings, a common operating means for raising and lowering the valves, a pair of relatively small rotatable paint receiving rolls journaled in the casing and inclined in opposite directions, conduits underlying the paint discharge openings and overlying the paint receiving rolls, a relatively large roll journaled beneath the paint receiving rolls, a funnel beneath the latter, and a plurality of revolvable brushes carried by the casing and adapted to contact with a horizontal surface to be painted, one of the brushes being disposed directly beneath the funnel.

2. A painting machine including a casing adapted to be moved back and forth over a surface to be painted, a plurality of paint receiving compartments having outlet openings therein, valves controlling the outlet openings, a common operating means for the valves, a pair of paint receiving rolls journaled below the paint receiving compartments, conduits underlying the outlet openings and arranged to discharge the paint on the rolls, a V-shaped funnel supported below the latter, and a plurality of revolvable brushes journaled in the casing one of which being disposed below the funnel, and gearing operatively connected with the brushes and rolls.

3. A painting machine comprising a wheel supported casing, paint compartments carried thereby having outlet openings therein, vertically movable valves controlling the outlet openings, crank shafts journaled in the compartments, operative connections between the valves and crank shafts, a manually operable rocking member carried by the casing, rods operatively connected with the operating member and crank shafts, a plurality of rotatable brushes carried by the casing, and means for conveying paint from the compartments to one of the brushes.

In testimony whereof I affix my signature in the presence of two witnesses.

JOHN HASSELBERGER.

Witnesses:

RAYMOND A. SMITH,

N. C. OSBORNE.