33-254. OR 1,082,355 SR

M. P. NASH.

SIGHT FOR FIREARMS.

APPLICATION FILED APR. 9, 1913.

1,082,355. Patented Dec. 23, 1913.

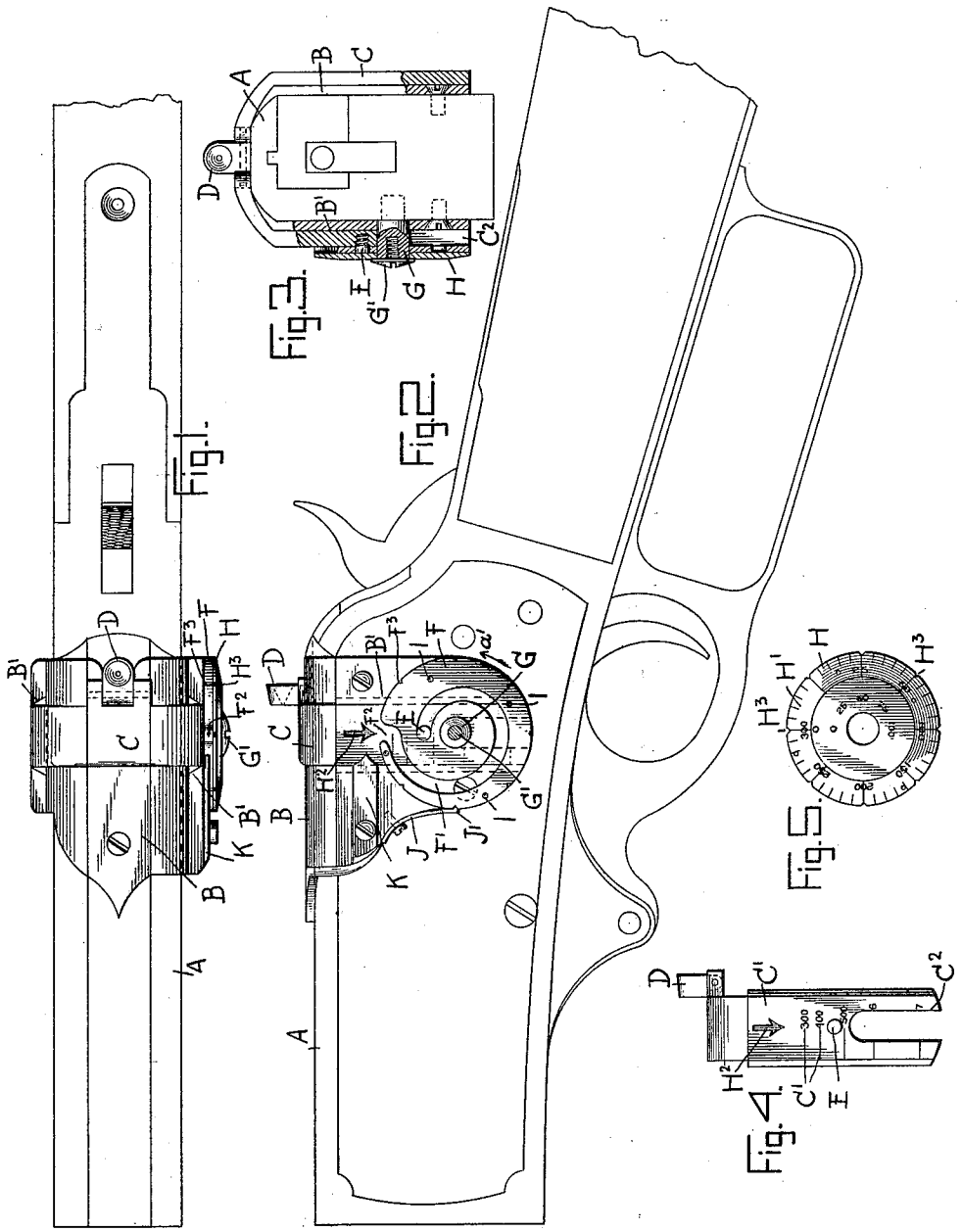

WITNESSES

C. K. Reichenbach.

Geo. G. Hoskins

INVENTOR

Malcolm P. Nash

BY Munn & Co

ATTORNEYS

1418

COLUMBIA PLANOGRAPH CO., WASHINGTON, D. C.

2P

UNITED STATES PATENT OFFICE.

MALCOLM PETERS NASH, OF THE UNITED STATES NAVY.

SIGHT FOR FIREARMS.

1,082,355. Specification of Letters Patent. Patented Dec. 23, 1913.

Application filed April 9, 1913. Serial No. 759,904.

To all whom it may concern:

Be it known that I, MALCOLM P. NASH, a citizen of the United States, in the Navy auxiliary service, U. S. S. *Justine*, San Francisco, in the county of San Francisco and State of California, have invented a new and Improved Sight for Firearms, of which the following is a full, clear, and exact description.

The object of the invention is to provide a new and improved sight for rifles and other firearms, and arranged to permit the user of the firearm to conveniently and accurately raise or lower the eye-piece of the sight for different ranges to visually indicate the range to which the eye-piece is set, and to audibly indicate a change in setting the eye-piece.

For the purpose mentioned use is made of a graduated yoke mounted to slide up and down on the barrel and carrying an eye-piece, a stud on the yoke, and a manually-controlled cam mounted to turn and provided with a spiral groove engaged by the said stud to raise or lower the said yoke on turning the cam, the said spiral groove being open at its outer end to allow free upward movement of the yoke independent of the cam.

A practical embodiment of the invention is represented in the accompanying drawings forming a part of this specification, in which similar characters of reference indicate corresponding parts in all the views.

Figure 1 is a plan view of the sight as applied to a rifle; Fig. 2 is a side elevation of the same with the dial removed; Fig. 3 is a cross section of the same, parts being shown in elevation; Fig. 4 is a side elevation of the yoke carrying the eye-piece; and Fig. 5 is a face view of the dial.

To the rear end of the barrel A is secured a saddle B provided at its sides with vertically-disposed guideways B′ engaged by the vertical side keepers of a yoke C provided on top with an apertured eye-piece D, which is preferably pivoted to the yoke to permit of swinging it down into folded dormant position, as shown in Fig. 1, or upward into vertical active position, as indicated in Figs. 2, 3 and 4. The left-hand side of the yoke C is provided with a stud E extending into a spiral groove F′ formed in a cam F mounted to rotate on a stud G screwed or otherwise secured to the barrel A, and the face of the cam F is covered by a dial H which forms the face plate for the cam F and is provided with an annular graduation H′ indicating the yards from zero to say 300 yards, as will be readily understood by reference to Fig. 5. The cam F and the dial H are fastened together by screws or other fastening means and are held against outward movement on the stud G by the head of a screw G′ screwing in the stud G and having the head engaging the face of the dial H, as plainly shown in Fig. 3. By the arrangement described the user of the firearm can readily turn the cam F and the dial H, the two moving in unison. When the stud E is at the inner end of the cam groove F′ (see Fig. 2) then the yoke C and with it the eye-piece D are in lowermost position and the zero mark of the graduation H′ is on top, opposite the pointer H^2 fixed or formed on the yoke C, and at the same time the outer terminal of the cam groove F′ is at the peripheral face of the cam opposite the pointer H^2. Now when the operator desires to raise the eye-piece D the cam F and dial H are turned in the direction of the arrow *a′* (see Fig. 2) so that an upward sliding movement is given to the yoke C owing to its stud E engaging the cam groove F′. The range to which the eye-piece D is set can be readily read by the corresponding graduation mark H′ in register with the fixed pointer H^2. Thus if half a turn is given to the cam F and the dial H then the 100 mark of the graduation H′ is in register with the pointer H^2, thus indicating that the range is 100 yards, and if a complete turn is given to the cam F and dial H then the 300 mark of the graduation H′ is opposite the pointer H^2 thus indicating that the range is 300 yards. The peripheral faces of the cam F and the dial H are provided with registering notches F^3 and H^3 in alinement with the principal marks of the graduation H′, as plainly shown in Fig. 5, and the said notches and adapted to be engaged by the pointed free end J′ of a spring pawl J secured to the saddle B. It will be noticed that when the cam F and dial H are turned to raise the eye-piece D to a desired range then the spring pawl J by being in contact with the peripheral faces of the cam F and the dial H holds the same against accidental turning, and if the eye-piece D is adjusted to one of the ranges registering with the

notches H^3, F^3 then the pointed end J′ drops into such notch thus audibly indicating to the user the desired adjustment.

When it is desired to raise the eye-piece D to a range beyond 300 yards, the yoke C is raised by the operator independent of the cam F, it being understood that at the time the cam has been turned to indicate 300 yards as above explained the stud E has passed out of the open end of the groove F′ to allow further raising of the yoke C independent of the cam F. The yoke C is provided with a graduation C′ the marks of which indicate the range in yards above 300 yards, as plainly shown in Fig. 4, and a pointer K is fixed on the saddle B and indicated on the marks of the graduation C′ whenever the yoke C is raised for indicating a range above 300 yards.

The lower end of the left side of the yoke C is forked, as indicated at C^2 to straddle the stud G. When it is desired to lower the eye-piece D the user presses the yoke C downward until the stud E reëngages the outer end F^2 of the cam groove F′, and then the operator turns the cam F and the dial H in the inverse direction of the arrow *a*′ so as to cause the yoke C to slide farther downward by the action of the cam groove on the stud E.

From the foregoing it will be seen that the user of the firearm can conveniently and accurately raise or lower the eye-piece D to a desired range.

The sight shown and described is very simple and durable in construction and can be readily applied to firearms as now constructed.

Having thus described my invention, I claim as new and desire to secure by Letters Patent:

1. A sight for firearms comprising a yoke mounted to slide vertically and carrying an eye-piece, a stud on the said yoke, and a manually-controlled cam mounted to turn and provided with a spiral groove engaged by the said stud to raise or lower the said yoke on turning the cam, the said spiral groove being open at its outer end to allow further upward movement of the yoke independent of the cam.

2. A sight for firearms comprising a yoke mounted to slide vertically and carrying an eye-piece, a stud on the said yoke, a manually-controlled cam mounted to turn and provided with a spiral groove engaged by the said stud to raise or lower the said yoke on turning the cam, the said spiral groove being open at its outer end to allow further upward movement of the yoke independent of the cam, and a dial mounted to turn with the said cam and forming a face plate for the same.

3. A sight for firearms comprising a guideway attached to the firearm, a yoke mounted to slide on the said guideway and provided with a vertically-arranged graduation, an eye-piece on the yoke, a pointer fixed on the said guideway and adapted to indicate on the said graduation of the yoke, a stud on the said yoke, and a revoluble cam mounted to turn on the said guideway and provided with a spiral groove into which projects the said stud, the outer open end of the spiral groove leading to the peripheral face of the cam to allow subsequent movement of the yoke independent of the cam.

4. A sight for firearms comprising a yoke mounted to slide vertically and carrying an eye-piece, a stud on the said yoke, a manually-controlled cam mounted to turn and provided with a spiral groove engaged by the said stud to raise or lower the said yoke on turning the cam, the latter being provided with peripheral notches, and a spring pawl fixed at its heel and adapted to engage with its free end the peripheral face of the cam and its notches.

5. A sight for firearms comprising a yoke mounted to slide vertically and carrying an eye-piece, a stud on the said yoke, a manually-controlled cam mounted to turn and provided with a spiral groove engaged by the said stud to raise or lower the said yoke on turning the cam, a dial mounted to turn with the said cam and forming a face plate for the same, the dial and cam having peripheral notches in register with sundry of the marks of the said graduation, and a spring pawl fixed at one end and having its free end in contact with the peripheral faces of the said cam and dial.

In testimony whereof I have signed my name to this specification in the presence of two subscribing witnesses.

MALCOLM PETERS NASH.

Witnesses:

CHAS. BOLINSKI,

GUND HIEHLE.

Copies of this patent may be obtained for five cents each, by addressing the "Commissioner of Patents, Washington, D. C."