United States Patent

[11] 3,601,299

[72] Inventors Richard Murer
Wiler near Utzensdorf;
Hermann Leiser, Lohn, SO, both of,
Switzerland

[21] Appl. No. 11,463
[22] Filed Feb. 16, 1970
[45] Patented Aug. 24, 1971
[73] Assignee Fritz Buser AG Maschinenfabrik
Wiler near Utzensdorf, Switzerland
[32] Priority July 2, 1965
[33] Switzerland
[31] 9302/65
Continuation-in-part of application Ser. No. 559,627, June 22, 1966, now abandoned.

[54] **CONTINUOUSLY OPERATING THERMOPLASTIC ADHESIVE APPARATUS**
11 Claims, 5 Drawing Figs.

[52] U.S. Cl. 226/96
[51] Int. Cl. B65h 17/24
[50] Field of Search 271/33; 276/96, 93; 156/247, 384, 385, 289, 388

[56] References Cited

UNITED STATES PATENTS

3,308,750 3/1967 Voegelin ..... 226/96 UX

FOREIGN PATENTS

872,360 7/1961 Great Britain ..... 226/96 UX

Primary Examiner—Richard A. Schacher
Attorney—Werner W. Kleeman

ABSTRACT: A continuously operating apparatus for advancing a web by adhesively securing the same to a transport band such as a conveyor belt, coated on one side with a layer of thermoplastic adhesive which includes a pair of guide roll means over which such a transport band is trained with the layer of adhesive exposed, means for feeding a textile web onto said transport band, a heating roll means for heating said layer of adhesive, means for applying a contact pressure between said band and textile web to bond the band and web to one another as the web passes said heating roll means and means for controlling the contact pressure between the textile web and the transport band as a function of the speed of movement of said textile web past said heating roll means in order to achieve a substantially uniform adhesive force between said web and said layer of adhesive on said transport band.

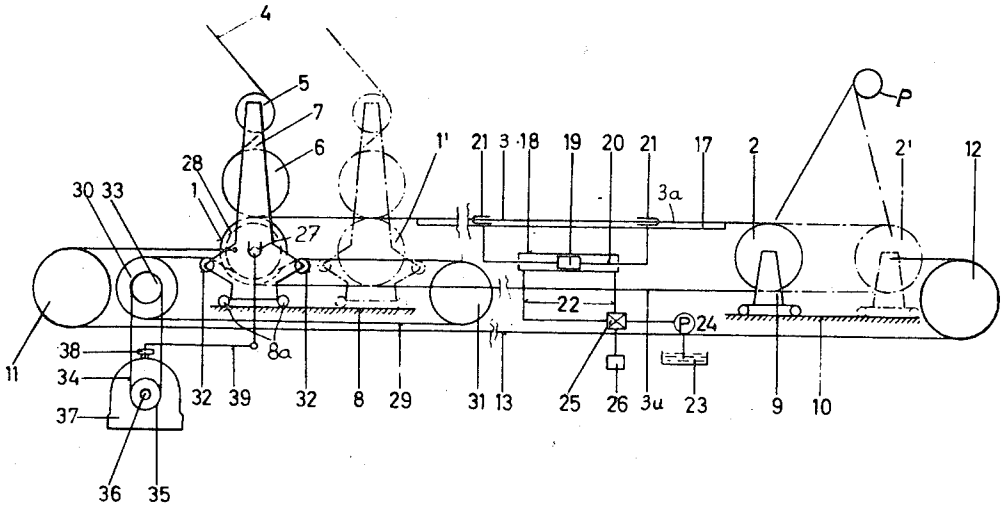

Fig. 1

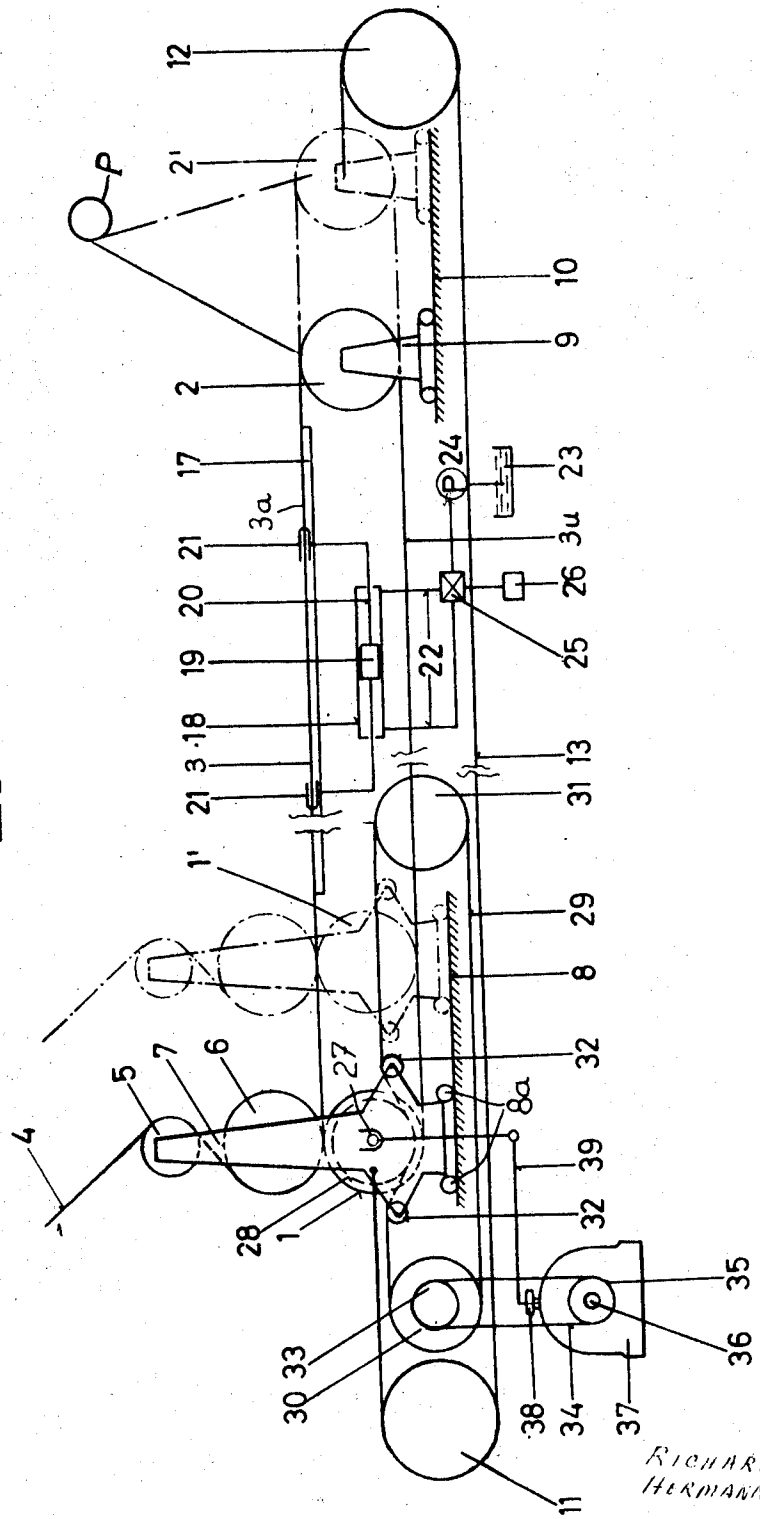

INVENTOR

RICHARD MAYER
HERMANN LEISER

BY Werner W. Kleeman

ATTORNEY

Fig. 2

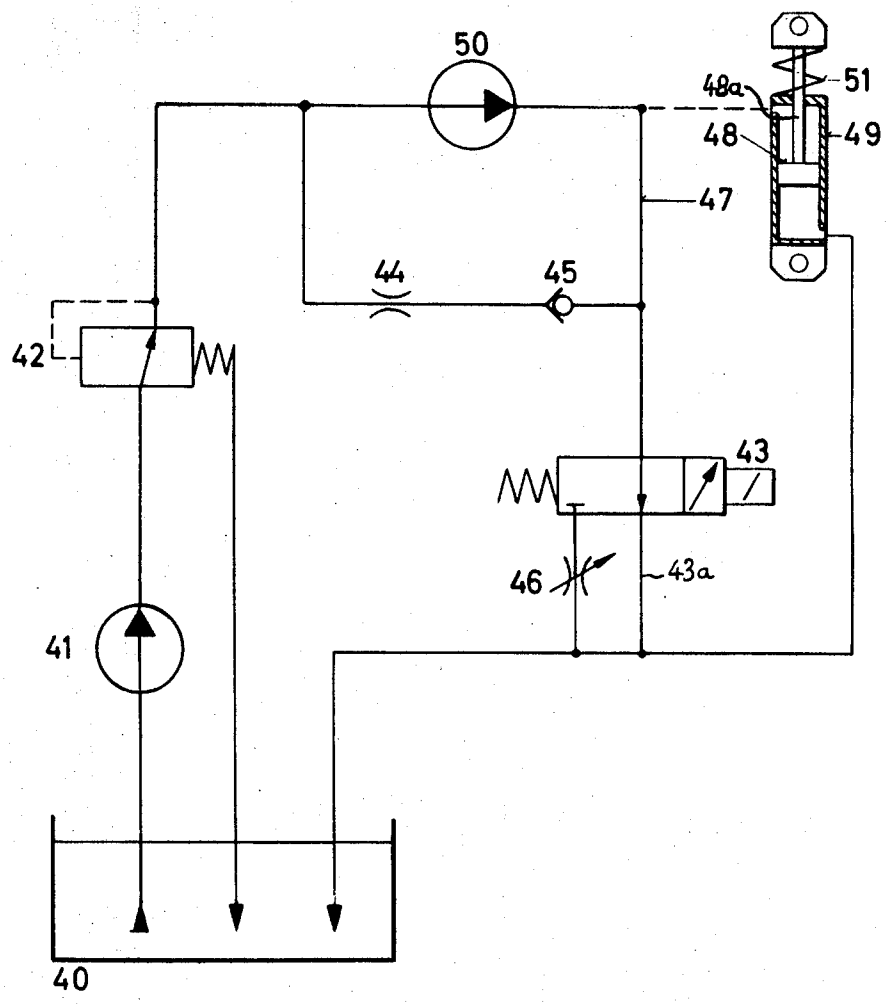

INVENTOR

RICHARD MURER
HERMANN LEISER

BY Werner W. Kleeman

ATTORNEY

Fig. 3

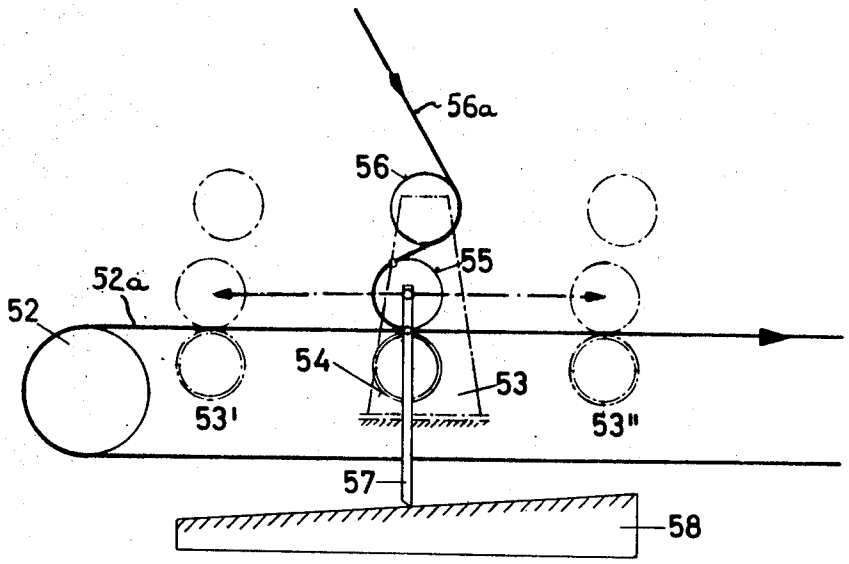

Fig. 5

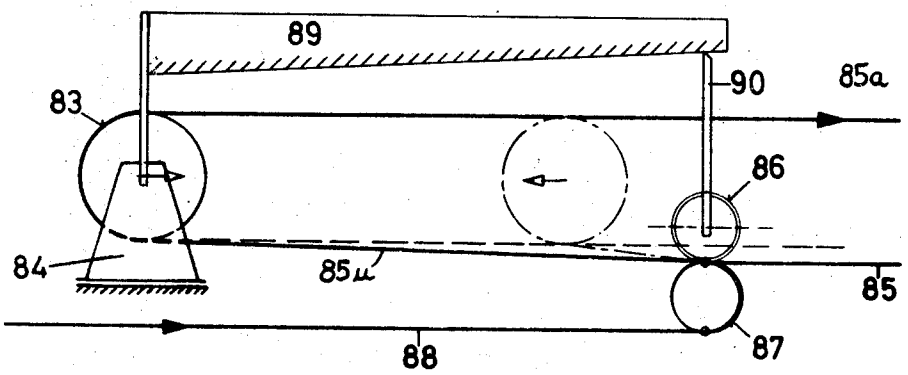

INVENTOR

Kiyoaki Wada
Hiroaki Ueda

BY Werner W. Kleeman

ATTORNEY

Fig. 4

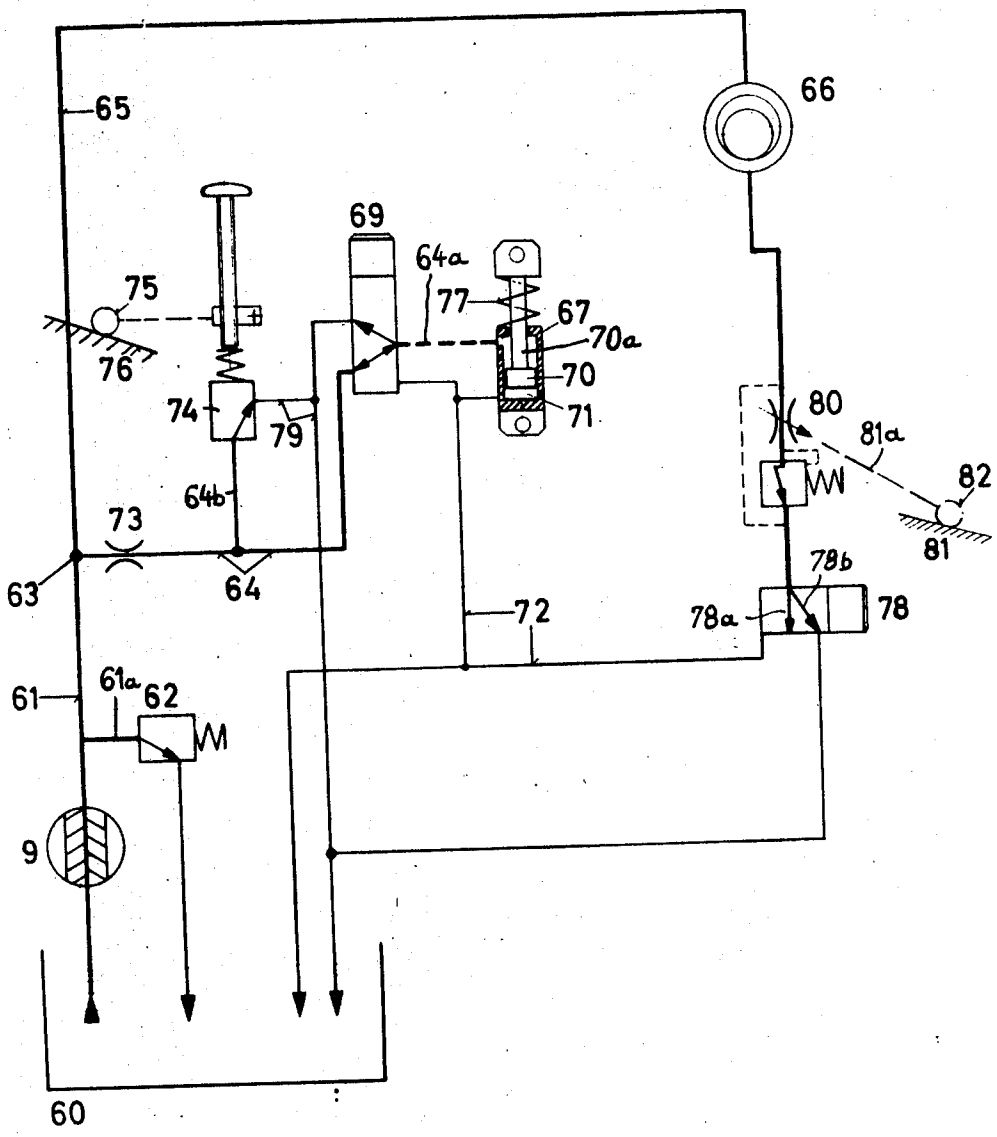

INVENTOR

Richard Murer
Hermann Leiser

BY Werner W. Kleeman

ATTORNEY

CONTINUOUSLY OPERATING THERMOPLASTIC ADHESIVE APPARATUS

BACKGROUND OF THE INVENTION

The present application is a continuation-in-part of our commonly assigned U.S. application Ser. No. 559,627, entitled Continuously Operating Thermoplastic Adhesive Apparatus, and filed June 22, 1966, and now abandoned.

The present invention has reference to an improved continuously operating thermoplastic adhesive apparatus, preferably for printing purposes.

Such type apparatus can be employed for example with continuous printing of textile webs at film or screen-printing machines. The material to be printed upon, in other words, the textile web, is temporarily bonded by means of adhesive with the transport band or conveyor belt in order to fix such web, during the usual plural successive steps of the printing operation carried out with different printing stencils, with respect to the latter. During printing the transport band or belt together with the adhesively bonded web receiving the imprint are temporarily arrested and the printing stencil is pressed against such transport band carrying the aforesaid web.

After the printing operation is completed the web must be able to be easily freed from its carrier, i.e. the transport band. Thermoplastic adhesives have proven themselves to be particularly suitable bonding materials for this purpose.

These adhesives are well known to those skilled in the art. For example, reference may be readily had to French Pat. No. 1,352,596 dated Jan. 6, 1964 and granted to Fritz Buser A.G., the assignee of this application. As indicated in such French patent, for thermoplastic materials which act as adhesives in this art, one can consider among other products of polymerization and of copolymerization the polyamides, the vinyl products of polymerization, the polyacrylates, etc. With the addition of proper plasticizers, one can adjust the softening point of these substances to the desired condition. Hence, under the expression, "thermoplastic adhesive" as used in the context of this application, there is to be understood a plastic coating in the form of a solution, dispersion or in another pourable and spreadable form, in other words, adheringly applied in the form of a plastic foil to a transport band for the material to be printed. This coating may, as mentioned above, consist of vinyl, acryl, olefin polymers and their copolymers, addition polymerization resins such as polyurethane, epoxy resins and so forth, polycondensation resins such as polyamides, polyesters and so forth, cellulose derivatives such as ethyl cellulose, cellulose acetate butyrate and so forth, provided that their adhesive thermoplasticity is between 140° and 180° C. As a more specific example, it can be mentioned that there can be used one part of a vinyl chloride-vinyl acetate copolymer with 10 percent by weight vinyl acetate, 4 parts of a polyacrylic acid ester which is adhesive at room temperature, and x parts of a solvent such as methylethylketone until obtaining the desired application viscosity, the quantity being dependent upon the coating apparatus. Such thermoplastic adhesive is applied to the outer surface of the transport band and is heated for a short time by means of heating plates in order to bond the transport band with the web of bandlike material to be printed.

Several undesirable conditions appear at the known constructions of screen-printing machines during the printing operation—during which time both the transport band and the material to be printed are at standstill—which disadvantageously affect the quality of the imprint. These are as follows:

Due to the relatively long residence or contact time of the heating plate with the transport band and the material to be printed the transport band becomes unnecessarily heated up;

As a result there is an unnecessary heat consumption;

The surplus heat stored in the transport band is radiated or transferred to the first stencil and causes thickening of the dye or coloring matter which in turn brings about clogging of the stencil;

The water of condensation at the first stencil frame and dripping of such onto the material is also caused by the excess radiated heat;

The heating plate which is practically only designed for one repeat length or size causes, during all smaller repeat lengths, a multiple pressing and heating-up of the thermoplastic layer and thereby also a different adhesive effect.

To overcome this unfavorable operation, a known construction of film or screen-printing machine employs a pair of horizontal, synchronously displaceable, transport band-guide rollers or drums, which during the printing operation, i.e. with the upper run of the transport band stationary, are displaced through a certain path. As a result, a portion of the lower band run moves past one guide roller into the upper run and a corresponding portion of the upper run moves past the other roller to become part of the lower run. At one band-guide roller there is provided a reversing and heating roll for the band-shaped material to be printed. The transport band and the material are guided between band-guide roller and heating roll. Such heating roll and band-guide roll are conjointly mounted at a common carriage or slide, thus remain stationary relative to one another during horizontal displacement.

During the feed cycle, after the printing operation has been terminated, at which time the transport band together with the bonded web or material to be printed is displaced by a feed mechanism through one stencil length, the so-called "repeat length," the pair of guide rollers move in the same direction as the transport band, however, with smaller velocity than such. Consequently, the lower run of the transport band has imparted to it a resultant velocity in the direction of rotation thereof. Since during the previously mentioned horizontal displacement of both band-guide drums or rollers the heating and reversing roll is also entrained, i.e. displaced, this means that the material to be printed and the transport band during all phases of operation move off the heating roll and the band-guide rollers, even through with a velocity fluctuating between a maximum and minimum value.

Indeed this apparatus improves the conditions with regard to uniformity of heating of the thermoplastic layer, yet the adhesive force nonetheless still varies in accordance with the still present fluctuations in the time that the thermal energy acts upon the transport band.

SUMMARY OF THE INVENTION

Accordingly, it is a primary object of the present invention to provide an improved apparatus which overcomes these disadvantages of the prior art structures.

Another more specific object of this invention is concerned with the provision of an improved continuously operating thermoplastic adhesive apparatus wherein the heat roll is never stationary on the material and the pressure applied to the material is a function of the speed of the web or material to be printed.

The inventive continuously operating thermoplastic adhesive apparatus, particularly for printing purposes, possesses means for periodically feeding according to the pattern repeat length a transport band for the web to be printed, which band is coated at one side with thermoplastic material, and a pair of transport band-guide rollers which are parallely displaceable for themselves or in conjunction with a heating roll or a parallely displaceable pair of heating and pressure rollers for the purpose of maintaining a continuous relative movement between heating roll and web. Characteristic of the inventive apparatus is the fact that means are provided for controlling the contact pressure between the heating roll and one of the two transport rollers or the pressure roll, which control the contact pressure as a function of the relative velocity between the heating roll and the transport band and web, in order to achieve a uniform adhesive force between the web and the thermoplastic layer of the transport band.

BRIEF DESCRIPTION OF THE DRAWINGS

Other features, objects and advantages of the invention will become apparent by reference to the following detailed description and drawings in which:

FIG. 1 schematically illustrates a first embodiment of inventive apparatus having oscillating transport band-guide drums or rollers;

FIG. 2 is a schematic circuit diagram of the control and drive arrangement for the embodiment of FIG. 1;

FIG. 3 depicts a further embodiment of apparatus employing oscillating heat and pressure rolls and stationary transport band-guide rollers or drums;

FIG. 4 schematically illustrates the circuit diagram of the control and drive arrangement for the embodiment of FIG. 3; and

FIG. 5 depicts a further embodiment of apparatus with oscillating transport band-guide rollers

DETAILED DESCRIPTION OF THE PREFERRED EMBODIMENTS

Describing now the drawings, in FIG. 1 reference numerals 1 and 2 designate two band-guide drums or rollers over which there is trained an endless transport band or belt 3. This transport band or belt 3 serves as the carrier for the material or textile web 4 to be printed which is arriving from above and via a reversing or deflecting roll 5 and a heating and pressing roll 6 arrives at the transport band 3. The depicted left end transport band-guide roller 1 and the two aforementioned rolls 5 and 6 are mounted at a common roll carriage 7 so as to be horizontally displaceable upon guide rails 8, for instance by means of rollers or wheels 8*a*.

At the right end of the transport band 3, the band-guide roller 2 is likewise mounted in a roll carriage 9 and by means of such is horizontally displaceable upon the rails 10. The rails 8, 10 are affixed to the machine frame in a position substantially parallel to the printing table 17. In order to be able to keep the transport band or belt 3 tensioned notwithstanding the displaceability of the rollers 1 and 2, the roll carriages 7 and 9 are interconnected by chain 13, or equivalent structure, guided or trained over reversing wheels 11 and 12. Naturally, at each side of the machine there could be provided one such chain 13. The terminal position of both band-guide rollers 1, 2 are shown in FIG. 1 by their solid and phantom line positions respectively, designated by reference characters 1, 2 and 1′, 2′ respectively.

It will be recalled that reference numeral 17 designated the standard printing table of a film or stencil printing machine, this table being fixedly arranged in the usual manner. A printing blanket, i.e. here the transport band 3 which trains about the two rollers 1 and 2, travels by means of its upper band or belt run 3*a* over the surface of the table 17 so as to be supported thereby during printing. The lower run 3*u* extends beneath the printing table as shown. To drive the transport band 3 at its upper run 3*a*, there is provided a piston 19 slidably displaceable in a cylinder 18, the piston rods 20 of which are provided with transporting or entrainment members 21. These entrainment members 21 provide a frictional or positive connection with the transport band 3 during the feed movement of the piston 19. Typically, such entrainment members 21 can for example by hydraulically or magnetically actuated tongs. Displacement of the piston 19 in the cylinder 18 is perfected by alternative impingement of both faces thereof with a pressurized fluid medium, oil for instance. This pressurized oil is continuously delivered from a reservoir 23 by means of a suitable pump 24 and is fed to the cylinder 18 be reversing valve 25 via the conduits 22. Reversing valve 25 is controlled by a servo element 26 which may be time controlled for instance.

As best seen by referring to FIG. 1, the band-guide roller 1 carries at an axle or journal 27 a chain or sprocket wheel 28 which is rigidly connected for rotation therewith, the diameter of such sprocket wheel 28 corresponding approximately to that of such roller diameter. Sprocket wheel 28 is in engagement with an endless chain 29 trained about further sprocket wheels 30 and 31 and held in engagement with the sprocket wheel 28 by means of the small straddling rollers 32. Whereas the rollers 32 are rotatably mounted at the roll carriage 7 the sprocket wheels 30 and 31 are mounted in the machine frame.

Upon the same axle as the sprocket wheel 30 there is mounted a smaller sprocket wheel 33 which is rigidly connected for rotation with the former and operatively connected by a chain 34 with a further sprocket wheel 35. The latter is seated upon the driven shaft 36 of an infinitely variable transmission or drive 37. This infinitely variable transmission 37 is operatively coupled with a suitable nonillustrated electric motor which during operation of the entire machine is continuously in operation. The r.p.m. which occur on shaft 36 can be adjusted at the drive shaft 36, and which can vary between U_A=0 to U_A=max., will depend upon the position of a regulating element 38 on the transmission 37. The position of this regulating element 38 is determined by the position of the roll carriage 7, and roll 1 and specifically during displacement of the latter between its two terminal positions shown in FIG. 1 by the full and phantom line rollers 1 and 1′ respectively. The rolls 1 and 2 automatically move forward from positions 1 and 2 to positions 1′, 2′ each time elements 21 advance the band or belt 3. The carriage 7 for the purpose of transferring the shifting movement is flexibly connected through a suitable rod or linkage system 39 with the regulating element 38 in order to transmit its displacement movement, such regulating element for example being formed by arm means. It is pointed out that during the actual operation of the machine the guide roller 1 does not completely reach the full line position, rather usually stops short thereof, and this full line position is only then reached when the machine is placed out of operation. As a result, the regulating element 38 is moved by the linkage or rod system 39 into the position U_A=0, so that the driven shaft 36 and the chain 34 will come to a stop, i.e. their movements are arrested. The aforedescribed structure of the drive for the transport band does not per se form inventive subject matter of this application, rather it has been described and claimed in the commonly assigned, copending U.S. Pat. application Ser. No. 397,246 of Heinrich Voegelin, filed Sept. 17, 1964, and entitled "Intermittent Printing of Web on Conveyor Belt," now U.S. Pat. No. 3,308,750 dated March 14, 1967.

As fully explained in the aforementioned patent the operation of the machine with the described drive apparatus for the continuous displacement of the lower band run 3*u* takes place in principle such that during the standstill times of the upper run 3*a* only a certain band length is transported from the outfeed or delivery side of the upper run 3*a* to the infeed side thereof, and specifically by virtue of the displacement of the band-guide rollers 1 and 2 from the phantom line positions 1′ and 2′ respectively, towards the full line positions. On the other hand, due to the forward movement of the rollers 1 and 2 during the pattern repeat movements of the upper run 3*a*, a portion of the band length required by the lower run 3*u* is compensated in that the rollers 1, 2 during this movement are displaced in the same direction. As a result, the speed of the lower run 3*u* during the pattern repeat movement of the upper run 3 *a* can be maintained considerably lower than the speed of the upper run would require.

The transport band 3 and the textile web 4 in this manner only remain temporarily in contact with the same location of the drum or roller 1 and the heating roll 6. During the entire work cycle, the transport band or belt 3 and the textile web 4 are always drawn off the roller 1 and the heat roll 6, even though with variable speed.

The result of the previously described measures is that there is achieved a more uniform action of the adhesive bond than was possible with the prior art constructions, which however, still did not constitute the obtainable optimum result. However, this can be achieved in a relatively simple manner by changing the contact pressure of the heat roll 6 as a function of the speed, as will be more fully explained shortly.

The third factor, namely the temperature of the heating roll, influencing the adhesive action, cannot be regulated owing to the relatively large thermal inertia.

In FIG. 2 there is schematically illustrated details of a possible construction of circuit diagram for the control and drive for regulating the contact pressure of the heating roll 6 of FIG. 1. Reference numeral 40 represents a fluid tank or reservoir from which fluid such as oil is pumped into the depicted closed flow cycle by means of a suitable pressure pump 41. Generally, the tank 40 and the pressure pump 41 are components of the hydraulic system present in the screen-printing machine, at which the previously described inventive thermoplastic adhesive apparatus can be connected. For solving the problem with which the present invention is concerned, in this instance the pressure of the system must be reduced by means of a suitable pressure reduction valve 42 to an appropriate value for controlling the contact pressure. When the control valve 43, which can be assumed to be a manually operated valve, assumes the position shown in FIG. 2, then the fluid pumped by pump 41 out of the tank 40 and after passing the pressure reduction valve 42, flows without pressure past a fixed throttle 44 and a back pressure valve 45 back through line 43*a* into the tank 40. Upon placing the heating roll 6 into operation and through closing of the control valve 43, the fluid is then fed through the adjustable throttle 46. The through-flow cross section of this adjustable throttle 46 must be smaller than that of a fixed throttle 44 so that in the conduit system 47 there appears a pressure. This fluid pressure acts upon the face of the piston 48 at the side of the piston rod 48*a*, this piston 48 being slidable within the cylinder 49, and brings about contact of the heating roll 6 at the band-guide roller 1 of FIG. 1 prior to the movement of the transport band 3.

Now, as soon as the band-guide roller 1 of FIG. 1 begins to rotate it drives a control pump 50 operatively coupled with it, which generates a higher pressure in the conduit system 47 supplied by such aforementioned pump 50. This higher fluid pressure then closes the back pressure valve 45 against the system pressure acting from the other side and therefore also shuts down the main fluid stream. With increasing rotation of the heating roll 6, in other words, also the control pump 50, the feed or displacement of the pump 50 obviously increases and thereby also the pressure in the upper compartment of the cylinder 49. Return flow of the fluid stream delivered by the control pump 50 back into the tank 40 likewise takes place through the throttle valve 46, at which the desired pressure can be regulated. If a greater throughpassage cross section is adjusted at the adjustable throttle valve 46, then with increasing throughpassage velocity there appears a flatter pressure ascent, whereas such with smaller throughflow cross section at the throttle valve 46 becomes steeper.

It should thus be apparent that the contact pressure of the heating roll 6 is regulated in a simple manner as a function of the band speed. The slower the transport band 3 runs that much longer is it subjected to the thermal action of the heating roll 6, that much weaker must the contact pressure therefore be in order to achieve a certain adhesive force or bonding. On the other hand, with the band moving quicker off the heating roll 6 there would be required a stronger pressing together of the textile web and thermoplastic coated transport band in order to compensate for the weaker heating action, so as to obtain an equally strong bonding action.

If the printing operation is terminated then the roller carriage 7 of FIG. 1 automatically moves into the full line position of FIG. 1. In this carriage position the control valve 43 is again switched into the position shown, the conduit system 47 is without pressure and as a result the spring 51 can raise the heating roll 6 from the associated band-guide roller 1 of FIG. 1. Naturally, in lieu of the previously described hydraulic control for the contact pressure it would also be readily possible to provide a mechanical or electromechanical operating device.

FIG. 3 schematically depicts a further embodiment of inventive adhesive apparatus where in contrast to the previous embodiment of FIG. 1 here both transport band-guide rollers—only one of which is visible at the left of this Figure and designated by reference character 52—remain fixed in position, in other words, they are not displaced. In this variant construction the three rollers mounted in roll or roller carriage 53, namely a pressure roll 54, a heating roll 55 and a reversing or deflecting roll 56 are commonly displaced in horizontal direction by means of the roll carriage 53. The shaft of the pressure roll 54 is nondisplaceably mounted in the roll carriage 53, whereas that of the heating roll 55, for the purpose of changing the contact pressure, can be displaced up and down perpendicular to the plane of transit or transport of the band 52*a*. The movement rhythm of the roll carriage 53 back and forth between positions 53′ and 53″ corresponds to that of both roll carriages 7, 9 of the first described embodiment.

During the feed movement, the roll carriage 53 is also moved, however the speed of the carriage 53 into the position 53″ is less than that of the band feed. Between heating roll 55 and transport band 52*a* there is a relative movement. During the printing operation, i.e. with the band 52*a* stationary, the roller carriage 53 again returns into the starting position 53′. The speed conditions prevailing at the heating roll 55, at the pressure roll 54 and at the transport band 52*a* and the textile web 56*a* are thus the same as considered with the first described embodiment. Also here control of the pressure as a function of the path of the roll carriage 53 is undertaken hydraulically, yet as a function of the position of a feeler 57 which moves along a cam or ramp 58. Feeler 57 and cam 58 are only schematically depicted in FIG. 3.

Turning attention now to the hydraulic circuit for the control and drive elements, schematically depicted in FIG. 4 for controlling the speed and contact pressure of the apparatus of FIG. 3, it will here again be recognized that a pressure pump 59 delivers fluid under pressure from a tank or reservoir 60 into the conduit 61. It will also be seen that at the branch 61*a* there is provided an overpressure valve 62 through which any excess delivered fluid can return back into the tank 60. The main fluid stream divides at junction 63 into two branches 64 and 65. By means of the last-mentioned branch 65 a suitable fluid motor 66 is supplied for the purpose of driving the rollers 54, 55 of the roll carriage 53 (FIG. 3), whereas via the first branch 64 to which there also belongs the portion 64*a* of the conduit shown in dotted lines, pressurized fluid flows and arrives at the pressure cylinder 67 for the heating roll 55. Specifically, the fluid moving through branch conduit 64 flows through the throttle 73 and a three-way valve 69. This pressurized fluid impinges also here against the one face of the piston 70 within the cylinder 67 at the side of the piston rod 70*a*. The other cylinder chamber 71 on the other hand communicates with the tank 60 via a fluid return line 72 which also receives fluid from cylinder 67 and the valve 69. Between the throttle 73 and the valve 69 in the branch portion 64*b* there is located a pressure control valve 74, the adjustment of which is dependent upon the position of a feeler roll 75 which scans a control cam 76. Members 75, 76 can be considered analogous to the corresponding members 57, 58 of FIG. 3. The fluid leaving the pressure control valve 74 flows via return line 79 back into the tank 60. Additionally, this line 79 receives the fluid displaced from the upper compartment of the cylinder 70 when the heating roll 55 is lifted by the spring 77, in the manner previously explained, and conducts such fluid back into the tank 60.

In order to switch in and out the fluid motor 66 there is provided a valve 78 selectively movable from the closed position 78*a* into operating position 78*b*, and the leakage fluid of which flows back into the supply tank 60 via the line or conduit 72. The regulating valve 80 serves to regulate the fluid motor 66 and thereby the rotational speed of the rollers of the roll carriage 53. The adjustment of such regulating valve 80 is brought about by a control cam 81 scanned by a feeler or roller 82 coupled with the valve 80 by means of a suitable linkage system or rod schematically depicted at 81*a*. Here again, it

can be assumed that the elements **81** and **82** correspond to the members **57**,**58** of FIG. **3**, in other words, the feeler **57** of FIG. **3** is a composite feeler incorporating both feeler elements **75** and **82** of the circuit of FIG. **4**. Closing of the regulating valve **80** obviously brings about stopping of the fluid motor **66**, whereas when it is completely open this motor runs at full load.

In the embodiment of FIG. **5**, just as in that of FIG. **1**, both of the transport guide rollers, of which only the left one is depicted and designated with reference character **83**, are horizontally displaced simultaneously in the same direction and with the same speed by means of the roll carriages, where here only the one carriage at the left, designated by reference character **84**, is visible. At the lower run **85***u* of the transport band or belt **85** there is provided a pressure roller **86** which can be elevationally displaced or lowered and a stationary heating roll **87**. The textile web or material **88** to be printed is delivered to the transport band **85** from beneath via the stationary heating roll **87**. Control of the contact pressure takes place hydraulically in the manner explained with regard to the variant of FIG. **3**, and as a function of the position of the guide roller **83** via a movable control cam **89** sliding over a feeler element **90**, as shown.

The working cycle consists, just as with the embodiment of FIG. **1**, of a synchronous displacement of the band-guide rollers **84** towards the left, whereby textile web **85** is drawn onto the lower belt run **85***u*. The contact pressure is varied as a function of the position of the roll carriage **84**. With subsequent return of the roll carriage **84** into the starting position there simultaneously takes place the pattern repeat movement of the transport band **85**, and specifically quicker than the opposed movement of the transport band due to the return of both guide rollers into their starting position, so that the result is clockwise movement of the band **85**.

Basically, the control and drive arrangement of this variant corresponds in principle to the construction shown in FIG. **4**. One modification thereof resides in the fact that here the roll pressure cylinder is stationarily mounted at the pair of rollers **86** and **87**, and the two roll carriages **84** with the transport band-guide rolls **83** are driven instead of one roll carriage with the heating, pressure and reversing rolls (FIG. **3**).

With the described control of the contact pressure as a function of the roll speed it is possible to obtain in a relatively simple manner a practically constant adhesive force between transport band and the textile web to be printed, which improves the quality of the imprint.

While there is shown and described present preferred embodiments of the invention it is to be distinctly understood that the invention is not limited thereto but may be otherwise variously embodied and practiced within the scope of the following claims.

What is claimed is:

1. A continuously operating apparatus for advancing a web by adhesively securing the same to a transport band coated on one side with a layer of thermoplastic adhesive, comprising a transport band coated on one side with a layer of such thermoplastic adhesive, a pair of band-guide rollers over which said transport band is trained, means for feeding a textile web onto said transport band, heating roll means for heating said layer of thermoplastic adhesive, means for applying a contact pressure between said transport band and the textile web to bond said transport band and said textile web to one another as the web passes said heating roll means, and means for controlling the contact pressure between the textile web and the transport band as a function of the speed of movement of said textile web past said heating roll means in order to achieve a substantially uniform adhesive force between said textile web and said layer of thermoplastic adhesive on said transport band.

2. Continuously operating apparatus as defined in claim **1**, wherein said means for applying a contact pressure between said transport band and said textile web comprises said heating roll means and one of said band-guide rollers, and a traveling carriage in which said heating roll means and said one band-guide roller are mounted.

3. Continuously operating apparatus as defined in claim **2**, wherein said heating roll means is displaceably supported on said travelling carriage for movement selectively towards and away from said transport band.

4. Continuously operating apparatus as defined in claim **1**, wherein said means for applying a contact pressure between said transport band and said textile web comprises said heating roll means and a cooperating pressure roll and a travelling carriage in which said heating roll means and said pressure roll are mounted.

5. Continuously operating apparatus as defined in claim **4**, and said band-guide rollers being stationarily mounted.

6. Continuously operating apparatus as defined in claim **1**, wherein said means for applying a contact pressure between said transport band and said textile web comprises said heating roll means and a cooperating pressure roll and both said heating roll means and said pressure roll being stationarily mounted.

7. Continuously operating apparatus as defined in claim **6**, and further including a travelling carriage means for displaceably supporting said band-guide rollers.

8. Continuously operating thermoplastic apparatus as defined in claim **1**, said controlling means for said contact pressure comprising hydraulic means for regulating the contact pressure and said hydraulic means incorporating a pressure cylinder and a control pump driven synchronously with respect to said heating roll for generating a hydraulic pressure in said pressure cylinder as a function of the rotational speed of said heating roll means.

9. Continuously operating apparatus as defined in claim **1**, said controlling means for said contact pressure including a pressure cylinder, mechanical feeler means and a pressure regulating valve actuated by said mechanical feeler means for controlling the pressure within said pressure cylinder.

10. Continuously operating apparatus as defined in claim **9**, further including a travelling carriage on which said heating roll is mounted, a fluid motor for driving said travelling carriage, a regulating valve for controlling the rotational speed of said fluid motor and said mechanical feeler means including at least one feeler responsive to the movement of said travelling carriage for controlling said regulating valve.

11. Adhesive apparatus, particularly for printing purposes, comprising a transport band coated on one side with a layer of adhesive, means for feeding a textile web to be printed onto said transport band, heating roll means for heating said layer of adhesive, means for applying a contact pressure between said transport band and the textile web to bond said transport band and said textile web to one another, and means for controlling the contact pressure between the textile web and the transport band as a function of the speed of movement of said textile web in order to achieve a substantially uniform adhesive force between said textile web and said layer of adhesive on said transport band.